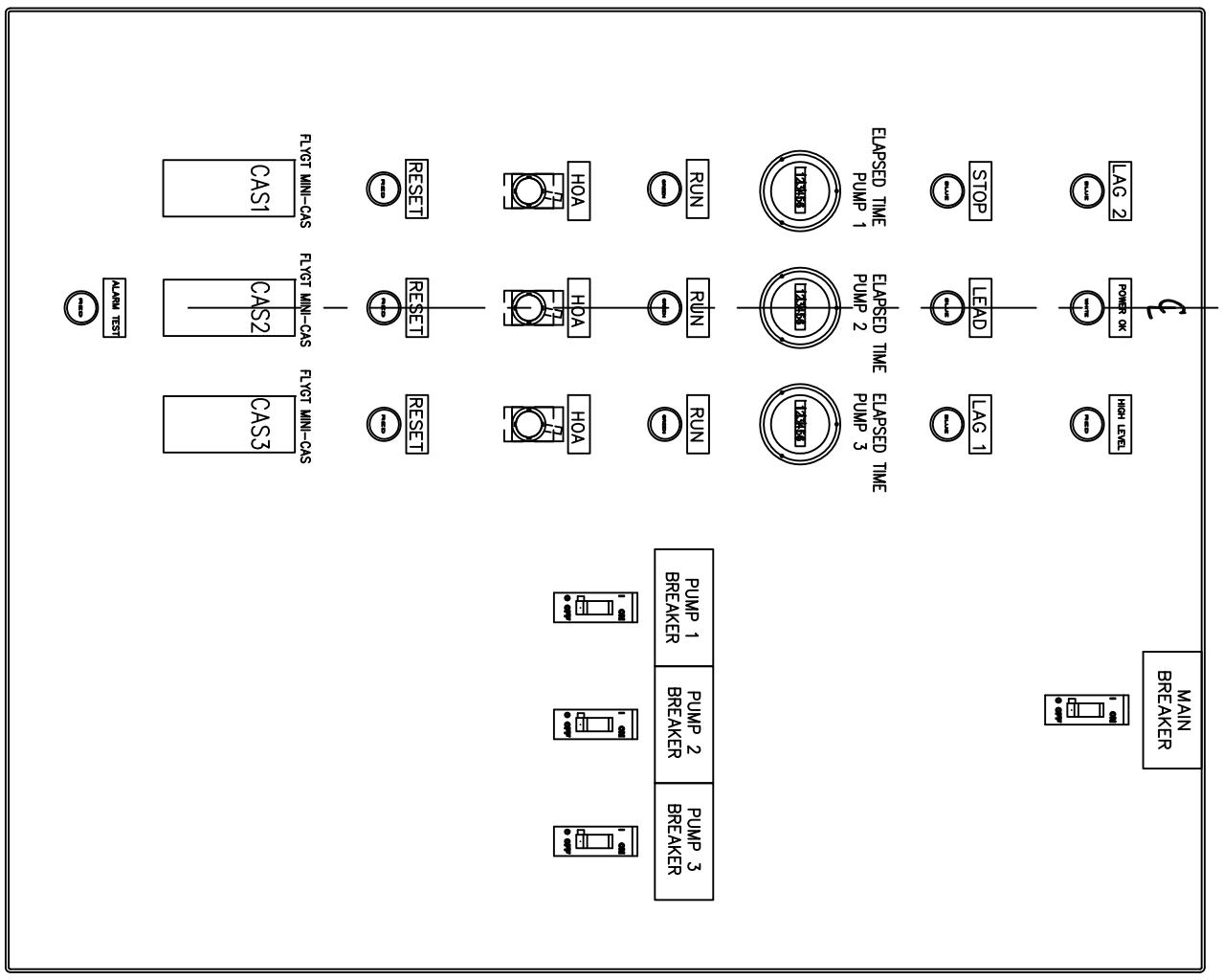

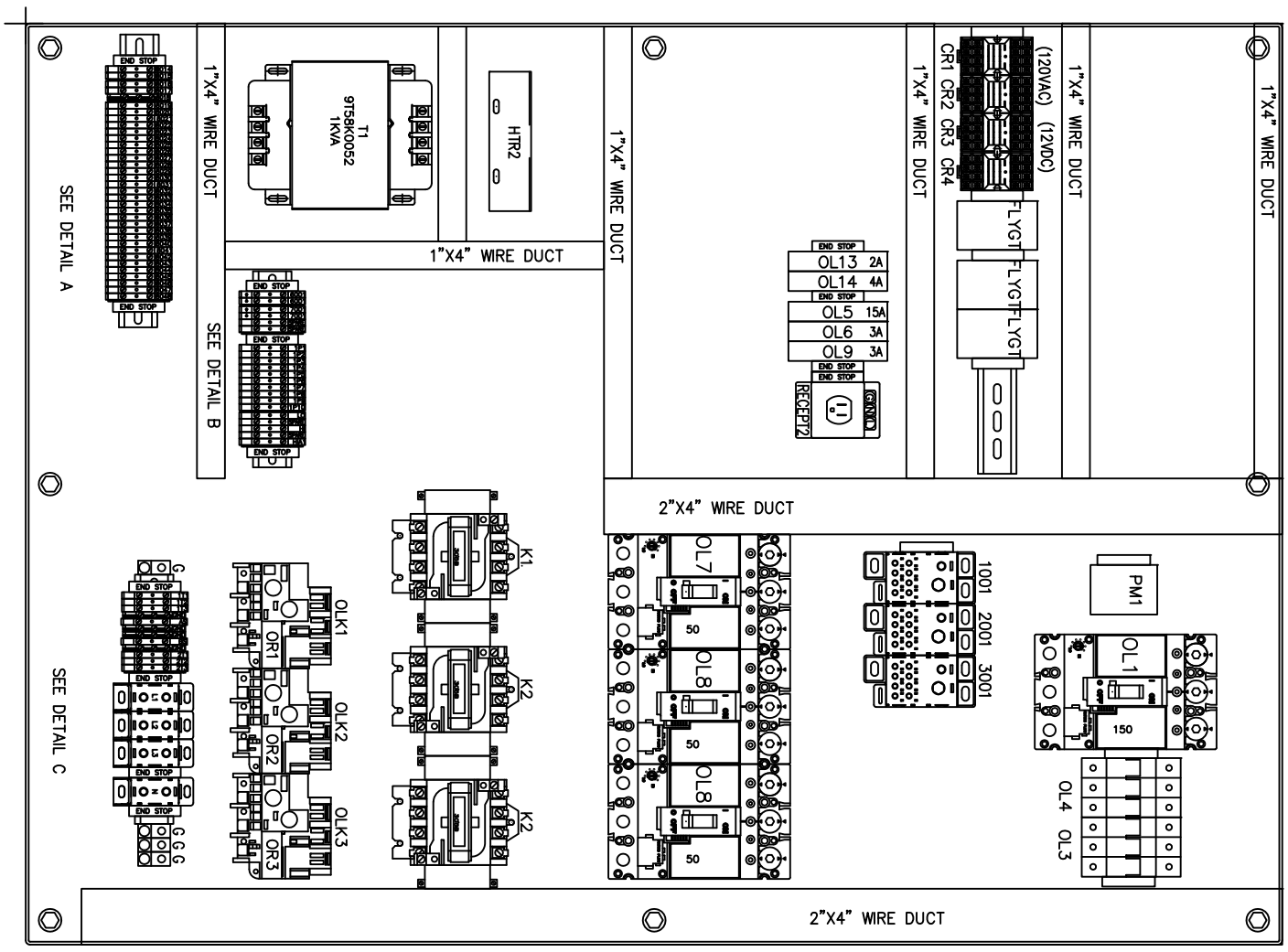

TRIPLEX CONTROLS
WITH FLOATS/PROBES

CONTROL PANEL LAYOUT
ELECTRICAL CONTROLS
TRIPLEX LIFT STATION SYSTEM

SHEET 1 OF 2
DRAWING #

ROMTEC UTILITIES
18240 NORTH BANK ROAD
ROSEBURG, OR 97470
(541)-496-3541
FAX (541)-496-0803
WWW.romtecutilities.com

UL LISTED LIFT STATION CONTROL PANEL & PUMP DISCONNECT PANEL-DUPLEX PUMPS WITH OPTIONAL PERMANENT ON-SITE ELECTRICAL GENERATOR.

DSN. SW
DRN. SW
CKD. SW
4-1-08

REV	DATE	DESCRIPTION	BY
1	4-1-08	CONTROL PANEL LAYOUT	SW

REVISIONS