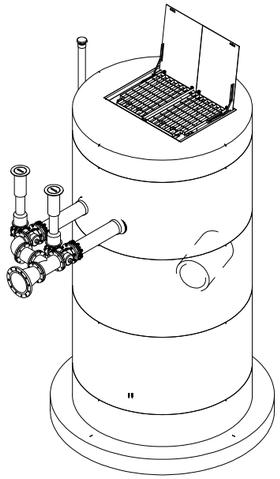

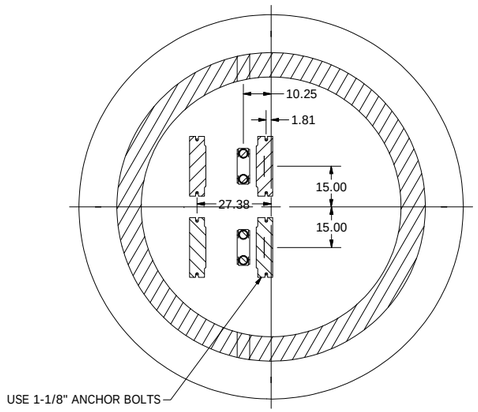

SECTION A-A
SCALE 1/28

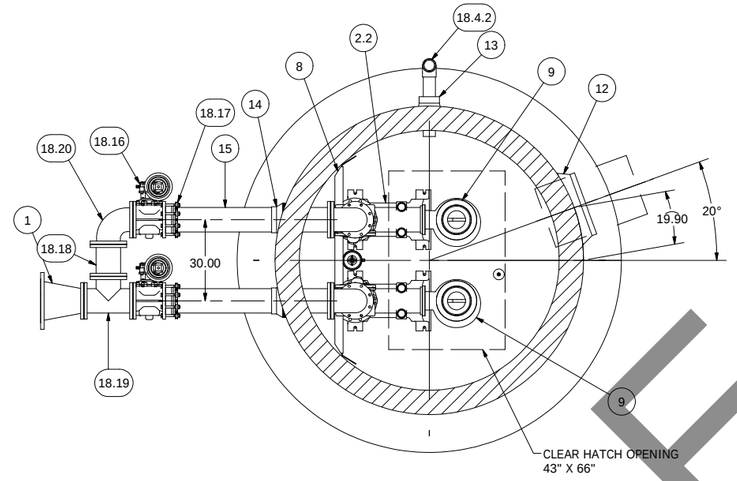

NOTE: WET WELL TOP SLAB IS PEDESTRIAN RATED

NOTE:
CONDUIT TO CONTROL
PANEL (BY OTHERS)
MINIMUM
(1) FOR POWER
(1) FOR LEVEL SENSING

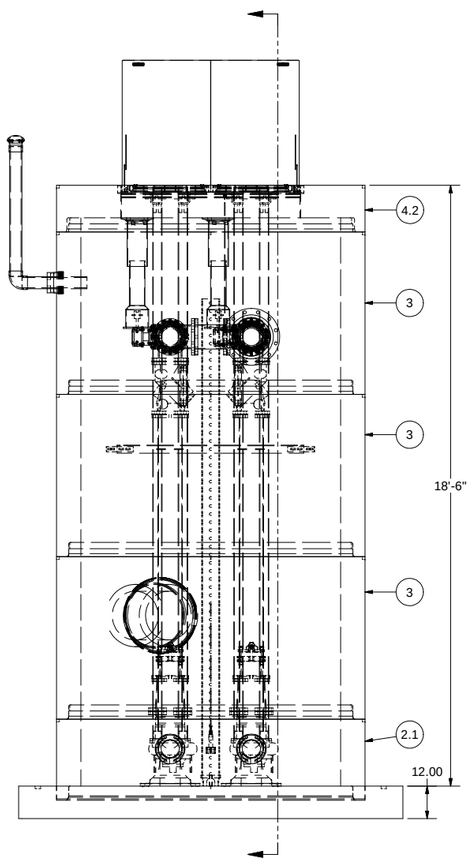

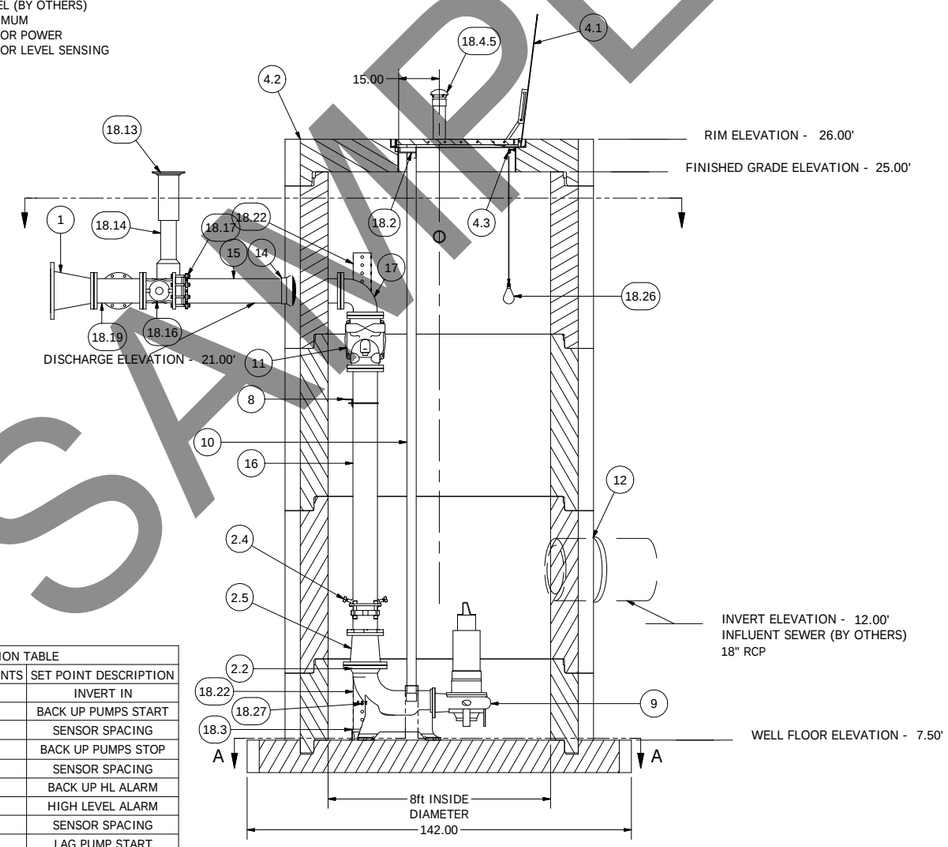

SENSOR AND ELEVATION TABLE		
LEVEL ELEVATION	DISTANCE BETWEEN POINTS	SET POINT DESCRIPTION
12.00		INVERT IN
N/A		BACK UP PUMPS START
	N/A	SENSOR SPACING
N/A		BACK UP PUMPS STOP
	N/A	SENSOR SPACING
19.75		BACK UP HL ALARM
19.50		HIGH LEVEL ALARM
	0.50	SENSOR SPACING
19.00		LAG PUMP START
	3.00	SENSOR SPACING
16.00		LEAD PUMP START
	6.00	SENSOR SPACING
10.00		PUMP STOP
	2.50	DISTANCE TO FLOOR
7.50		FLOOR ELEVATION

NOTE: ALL DIMENSIONS AND ELEVATIONS SHOWN ARE NOMINAL DIMENSIONS. IT IS THE RESPONSIBILITY OF THE ON-SITE CONTRACTOR OR ROMTEC UTILITIES CUSTOMER (NOT ROMTEC UTILITIES) TO VERIFY THE ACCURACY OF ANY CRITICAL DIMENSIONS OR ELEVATIONS PRIOR TO SETTING OR INSTALLING ANY EQUIPMENT.

8' DIAMETER WET WELL
8" DISCHARGE PIPING
250DLCFU615 EBARA PUMPS

ALL MATERIALS SHOWN ON THIS SHEET WILL BE SUPPLIED BY ROMTEC UTILITIES AND DELIVERED TO THE SITE AFTER THE HOLE HAS BEEN EXCAVATED AND SHORED. THE CONTRACTOR SHALL SUPPLY A CRANE OF SUFFICIENT SIZE TO LOWER ALL THE CONCRETE PIECES INTO THE HOLE SAFELY. THE THE CONTRACTOR SHALL INSTALL THE WET WELL (AND VALVE VAULT AND METERING VAULT IF APPLICABLE). ROMTEC UTILITIES WILL PROVIDE A REPRESENTATIVE FOR TECHNICAL ASSISTANCE ON THE DAY OF INSTALLATION TO ANSWER ANY QUESTIONS THAT MAY ARISE. THE CONTRACTOR IS RESPONSIBLE FOR ALL PLUMBING AND ELECTRICAL CONNECTIONS AND INSTALLATION. ITEMS NOTED AS "BY OTHERS" WILL BE PROVIDED AND INSTALLED BY THE CONTRACTOR. ROMTEC UTILITIES WILL NOT INSTALL ANY OF THE COMPONENTS SHOWN ON THIS PAGE.

SAMPLE

© 2013 ROMTEC INC. ALL RIGHTS RESERVED. THESE PLANS AND DRAWINGS MAY NOT BE REPRODUCED, ADAPTED, OR FURTHER DISTRIBUTED, AND NO COMPONENTS MAY BE CONSTRUCTED FROM THESE PLANS, WITHOUT WRITTEN PERMISSION OF ROMTEC, INC.

REV	DESCRIPTION	DATE	APPROV
2	REVISED ENTIRE DESIGN FOR 3100GPM	5-23-14	AD
1	REAL ELEVATIONS AND ADDED THE MANIFOLD	5-20-14	AD

REVISION HISTORY

VERIFY SCALE
BAR IS ONE INCH ON ORIGINAL DRAWING
0 1"
IF NOT ONE INCH ON THIS SHEET, ADJUST SCALES ACCORDINGLY

DSN - AD
DRN - AD
CKD - AD
DATE - 5-23-14

COMPONENT DRAWING

ROMTEC UTILITIES
18240 NORTH BANK ROAD
ROSEBURG, OREGON 97470
(541) 496-9678
FAX (541) 496-0804

ANTIOCH GYPSUM PLANT
8' - 8' DIA WET WELL

SHEET
1 OF 1

JOB NUMBER
RMTC
0000