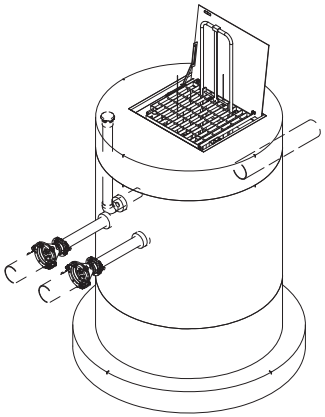

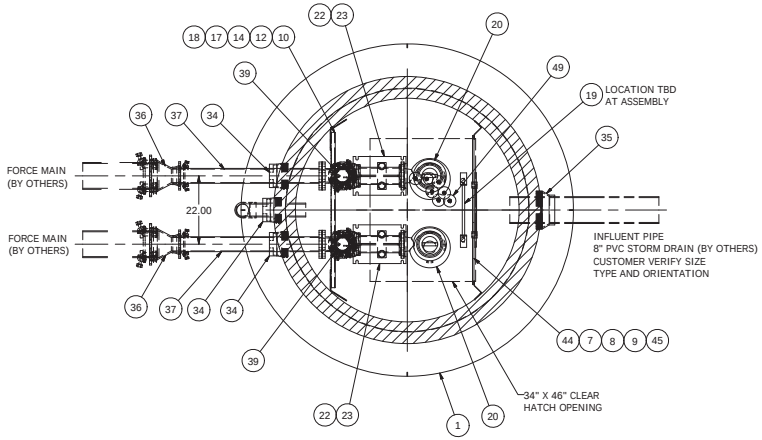

NOTE: WET WELL TOP SLAB IS PEDESTRIAN RATED

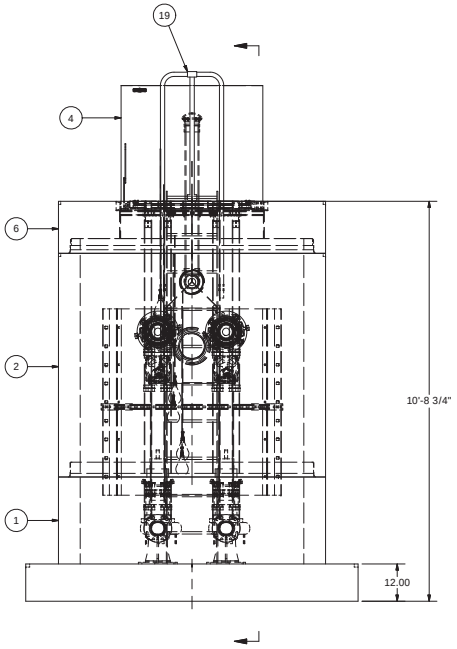

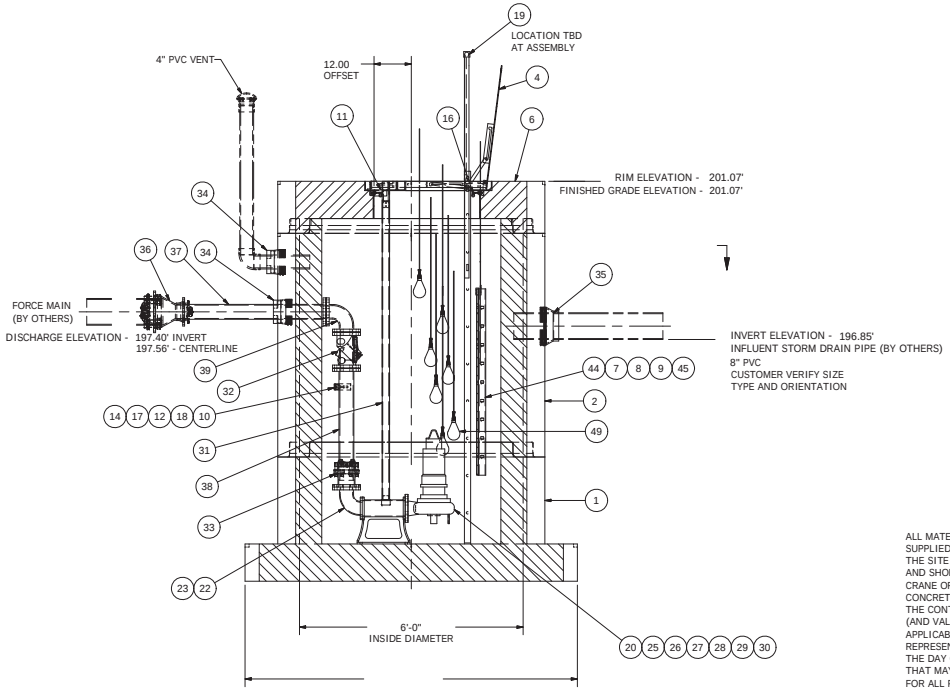

ALL MATERIALS SHOWN ON THIS SHEET WILL BE SUPPLIED BY ROMTEC UTILITIES AND DELIVERED TO THE SITE AFTER THE HOLE HAS BEEN EXCAVATED AND SHORED. THE CONTRACTOR SHALL SUPPLY A CRANE OF SUFFICIENT SIZE TO LOWER ALL THE CONCRETE PIECES INTO THE HOLE SAFELY. THE THE CONTRACTOR SHALL INSTALL THE WET WELL (AND VALVE VAULT AND METERING VAULT IF APPLICABLE). ROMTEC UTILITIES WILL PROVIDE A REPRESENTATIVE FOR TECHNICAL ASSISTANCE ON THE DAY OF INSTALLATION TO ANSWER ANY QUESTIONS THAT MAY ARISE. THE CONTRACTOR IS RESPONSIBLE FOR ALL PLUMBING AND ELECTRICAL CONNECTIONS AND INSTALLATION. ITEMS NOTED AS "BY OTHERS" WILL BE PROVIDED AND INSTALLED BY THE CONTRACTOR. ROMTEC UTILITIES WILL NOT INSTALL ANY OF THE COMPONENTS SHOWN ON THIS PAGE.

© 2009 ROMTEC INC. ALL RIGHTS RESERVED. THESE PLANS AND DRAWINGS MAY NOT BE REPRODUCED, ADAPTED, OR FURTHER DISTRIBUTED, AND NO COMPONENTS MAY BE CONSTRUCTED FROM THESE PLANS, WITHOUT WRITTEN PERMISSION OF ROMTEC, INC.

REV.	DESCRIPTION	DATE	BY
5	HCANGED TO EBARA PUMPS	11/30/10	AM
4	ADDED ITEM 45 - LADDER	05/12/09	AM
3	INLET PIPE SIZE CHANGE	2/26/09	AD
2	PUMP CHANGE	02/13/09	AM
1	COMPONENT DRAWING	01/28/09	AM

REVISIONS

VERIFY SCALE
BAR IS ONE INCH ON ORIGINAL DRAWING
0 1"
IF NOT ONE INCH ON THIS SHEET, ADJUST SCALE ACCORDINGLY

DSN. -
DRN. - AM
CKD. -
DATE - 01/28/09

COMPONENT DRAWING

ROMTEC UTILITIES
18240 NORTH BANK ROAD
ROSEBURG, OREGON 97470
(541) 496-9678
FAX (541) 496-0804

ARMSTRONG & BROOKS CONSULTING ENG
BILL BROOKS

LA STORMWATER
4' - 6' WET WELL

SHEET
1 OF 1

JOB NUMBER
RMTC
0000