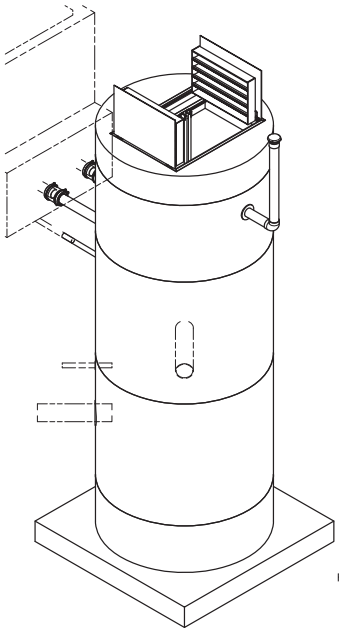

ISO VIEW
SCALE 1 / 30

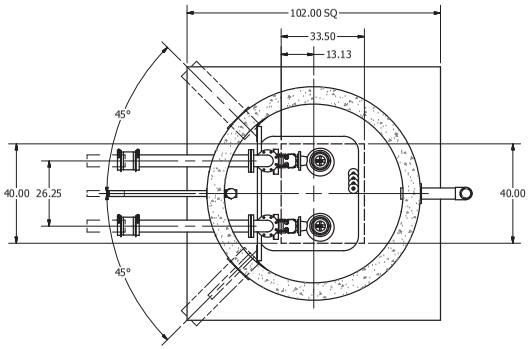


SECTION B-B
SCALE 1 / 25

| SENSOR AND ELEVATION TABLE | | |
|---|---|---|
| LEVEL ELEVATION | DISTANCE BETWEEN POINTS | SET POINT DESCRIPTION |
| 108.17' | | INVERT IN |
| --- | | BACK UP PUMPS START |
| | --- | SENSOR SPACING |
| --- | | BACK UP PUMPS STOP |
| | --- | SENSOR SPACING |
| --- | | BACK UP HL ALARM |
| 107.90' | | HIGH LEVEL ALARM |
| | 0.50' | SENSOR SPACING |
| 107.40' | | LAG PUMP START |
| | 0.50' | SENSOR SPACING |
| 106.90' | | LEAD PUMP START |
| | 1.50' | SENSOR SPACING |
| 105.40' | | PUMP STOP |
| | 2.23' | DISTANCE TO FLOOR |
| 103.17' | | FLOOR ELEVATION |

NOTE: WET WELL TOP SLAB IS H-20 OCCASIONAL TRAFFIC RATED

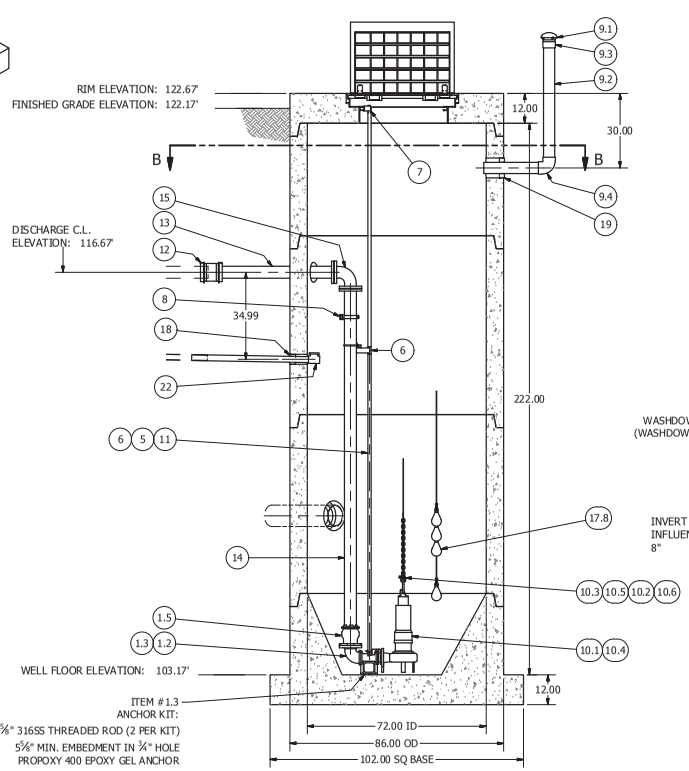


SECTION A-A
SCALE 1 / 25

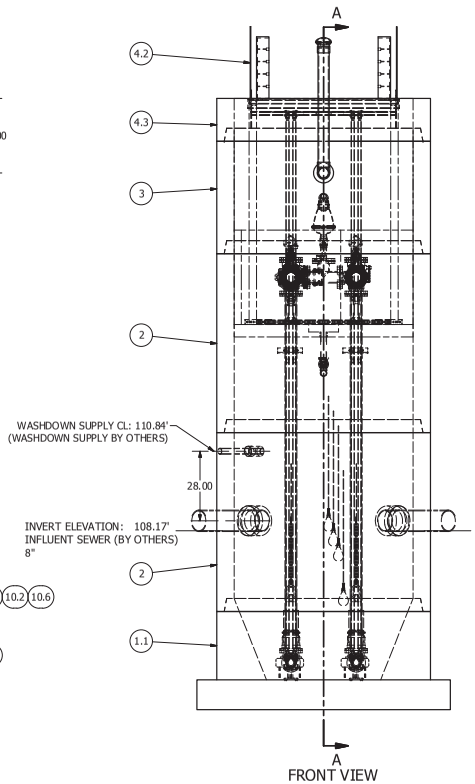


FRONT VIEW
SCALE 1 / 25

| PARTS LIST | | | |
|---|---|---|---|
| ITEM | QTY | STOCK NUMBER | DESCRIPTION |
| 1 | 1 | 10-CB000000 | BASE SLAB ASSEMBLY |
| 1.1 | 1 | 10-CB068HSQ | BASE - WW - 6ft DIA - RU DESIGN - SQUARE |
| 1.2 | 2 | 31-EL0304EB | DISCHARGE ELBOW - 3in x 4in - EBARA |
| 1.3 | 2 | 31-HW00AKS6 | ANCHOR KIT - DISCHARGE ELBOW |
| 1.4 | 2 | 31-QD03LMEB | QUICK DISCHARGE CONNECTOR - 3in - EBARA LM80 |
| 1.5 | 2 | 44-AD04RMAL | FLANGE ADAPTER - 4in - ALPHA |
| 2 | 2 | 12-CR067200 | BARREL - 6ft DIA x 6ft H |
| 3 | 1 | 12-CR069999 | BARREL - 6ft DIA x 45.25in H |
| 4 | 1 | 14-CT000000 | TOP SLAB ASSEMBLY |
| 4.1 | 12.0 ft | 13-AC999999 | GASKET - ANTI-SLAM |
| 4.2 | 1 | 13-HH06HD0E | HATCH - WW - 6ft H20 - 33.5in X 44in W/ ANTI SLAM |
| 4.3 | 1 | 14-CT06HD00 | TOP SLAB - 6ft DIA - H20 |
| 5 | 2 | 17-AC38000B | BOLT - UPPER GUIDE BAR BRACKET - 3-8in |
| 6 | 2 | 17-IG01S4EB | BRACKET - INTERMEDIATE GUIDE BAR - 1in - 316SS - EBARA |
| 7 | 2 | 17-UG01S6EB | BRACKET - UPPER GUIDE BAR BRACKET - 1in - 316SS - EBARA |
| 8 | 1 | 18-BR000000 | DISCHARGE SUPPORT BRACKET |
| 8.1 | 1 | 18-AC00000B | BOLT KIT - 316SS - WALL BRACKET |
| 8.2 | 2 | 18-AC00001B | WALL BRACKET - DISCHARGE SUPPORT |
| 8.3 | 2 | 18-AC010HSB | BOLT KIT - DISCHARGE CLAMP - BOLT, WASHER, LOCK NUT |
| 8.4 | 2 | 18-AC04CLS6 | DISCHARGE CLAMP - 316SS - 4in - STRUTMOUNT |
| 8.5 | 4.5 ft | 50-US0000S6 | UNISTRUT - 316SS - SLOTTED |
| 9 | 1 | 18-VT000000 | MUSHROOM CAP VENT ASSEMBLY |
| 9.1 | 1 | 18-VT0000MC | VENT - MUSHROOM CAP |
| 9.2 | 6.0 ft | 70-PP0400P8 | PIPE - PVC SCH80 - 4in DIA |
| 9.3 | 1 | 74-AD04008M | ADAPTER - PVC SCH80 - 4in - SLIP x MNPT |
| 9.4 | 1 | 76-EL049080 | ELBOW - PVC SCH80 - 4in x 90deg - SLIP |
| 10 | 1 | 30-PU000000 | PUMP SHIPPING CRATE |
| 10.1 | 2 | 30-PU0000EB | PUMP - EBARA - 100DLFMU63.7 - 5HP |
| 10.2 | 2 | 32-AC580LNK | LINK - 316SS - .625in - OBLONG - 2800# WLL |
| 10.3 | 2 | 32-BS7160SS | BOW SHACKLE - 316SS - 7-16in |
| 10.4 | 2 | 32-CGA000SS | CORD GRIP - .750in - .990 - SS |
| 10.5 | 4.0 ft | 32-PL380OS6 | CHAIN - 316SS - 3-8in S5 (2 x 2ft) |
| 10.6 | 2 | 32-PLLSA000 | LIFTING SLING ASSEMBLY - CABLE 22FT TOTAL LENGTH |
| 11 | 72.0 ft | 40-PP0100S4 | PIPE - 316SS SCH40 - 1in DIA (4 x 10ft, 4 x 8ft) |
| 12 | 2 | 44-CP040AD0 | COUPLING - 4in - ALPHA |
| 13 | 2 | 45-FP040480 | SPOOL - DI - 4in DIA x 48in - FLGxPE |
| 14 | 2 | 45-FP041440 | SPOOL - DI - 4in DIA x 144in - FLGxPE |
| 15 | 2 | 46-EL0490DI | ELBOW - DI - 4in x 90deg - FLGxFLG |
| 16 | 4 | 49-GS040000 | GASKET - FLANGE - 4in |
| 17 | 1 | 50-AC000000 | WELL SHIPPING CRATE |
| 17.1 | 4 | 12-GS000001 | BARREL - GASKET |
| 17.2 | 1 | 13-KY000000 | HATCH KEY |
| 17.3 | 4 | 18-AC00CH00 | CABLE HANGER ASSEMBLY |
| 17.4 | 4 | 18-HD040000 | LIFTING CLUTCH - 4 TON |
| 17.5 | 1 | 51-AC00NSTB | NEVER SIEZE - TUBE |
| 17.6 | 101.5 ft | 51-SE0101SL | SEALANT - 1in x 1in - 14.5ft/ROLL - CS-202 |
| 17.7 | 93 ft | 51-TC060000 | TAPECOAT - 6in |
| 17.8 | 4 | 80-FS20MSNL | FLOAT - 20m - MS1 - NOLTA |
| 18 | 2 | 59-LS020400 | LINK SEAL - 4in CORE x 2in PIPE |
| 19 | 3 | 59-LS040800 | LINK SEAL - 8in CORE x 4in PIPE |
| 20 | 2 | 59-LS120800 | LINK SEAL - 12in CORE x 8in PIPE |
| 21 | 4 ft | 70-PP0200P4 | PIPE - PVC SCH40 - 2in |
| 22 | 1 | 72-DB020SPB | DRAINBACK VALVE - PVC - 2in |

NOTE:
CONDUIT TO CONTROL PANEL (BY OTHERS)
MINIMUM:
(2) FOR POWER
(1) FOR LEVEL SENSING

ALL MATERIALS SHOWN ON THIS SHEET WILL BE SUPPLIED BY ROMTEC UTILITIES AND DELIVERED TO THE SITE AFTER THE HOLE HAS BEEN EXCAVATED AND SHORED. THE CONTRACTOR SHALL SUPPLY A CRANE OF SUFFICIENT SIZE TO LOWER ALL THE CONCRETE PIECES INTO THE HOLE SAFELY. THE THE CONTRACTOR SHALL INSTALL THE WET WELL (AND VALVE VAULT AND METERING VAULT IF APPLICABLE). ROMTEC UTILITIES WILL PROVIDE A REPRESENTATIVE FOR TECHNICAL ASSISTANCE ON THE DAY OF INSTALLATION TO ANSWER ANY QUESTIONS THAT MAY ARISE. THE CONTRACTOR IS RESPONSIBLE FOR ALL PLUMBING AND ELECTRICAL CONNECTIONS AND INSTALLATION. ITEMS NOTED AS "BY OTHERS" WILL BE PROVIDED AND INSTALLED BY THE CONTRACTOR. ROMTEC UTILITIES WILL NOT INSTALL ANY OF THE COMPONENTS SHOWN ON THIS PAGE.

© 2017 ROMTEC INC. ALL RIGHTS RESERVED. THESE PLANS AND DRAWINGS MAY NOT BE REPRODUCED, ADAPTED, OR FURTHER DISTRIBUTED, AND NO COMPONENTS MAY BE CONSTRUCTED FROM THESE PLANS, WITHOUT WRITTEN PERMISSION OF ROMTEC, INC.

NOTE: ALL DIMENSIONS AND ELEVATIONS SHOWN ARE NOMINAL DIMENSIONS. IT IS THE RESPONSIBILITY OF THE ON-SITE CONTRACTOR OR ROMTEC UTILITIES CUSTOMER (NOT ROMTEC UTILITIES) TO VERIFY THE ACCURACY OF ANY CRITICAL DIMENSIONS OR ELEVATIONS PRIOR TO SETTING OR INSTALLING ANY EQUIPMENT.

| REVISION HISTORY | | | |
|---|---|---|---|
| DESCRIPTION | REV | DATE | APPROV |
| INITIAL DESIGN | 0 | 6-15-15 | AD |
| REVISED PLANS | 1 | 7-14-16 | KB |
| PER COMMENTS, UPDATED PART #s | 2 | 6-20-17 | KB |
| PER COMMENTS AND LAUNCH | 3 | 8-4-17 | AD |

VERIFY SCALE
BAR IS ONE INCH ON ORIGINAL DRAWING
0 1"
IF NOT ONE INCH ON THIS SHEET ADJUST SCALES ACCORDINGLY

DSN - KEVIN BOGAN
DRN - KEVIN BOGAN
CKD -
DATE - 7-14-16

COMPONENT DRAWING

ROMTEC UTILITIES
18240 NORTH BANK ROAD
ROSEBURG, OREGON 97470
(541) 496-9678
FAX (541) 496-0804

BIOLOGICAL NUTRIENT REMOVAL PROJECT

ML FLOW SPLITTER SCUM
WET WELL ASSEMBLY

SHEET
1 OF 2

JOB NUMBER
RMTC

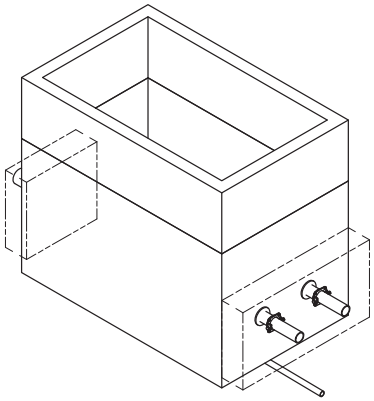

ISO VIEW
SCALE 1 / 25

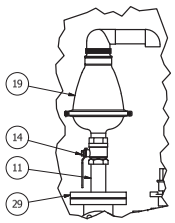


AIR RELEASE VALVE
DETAIL E
SCALE 1 / 10

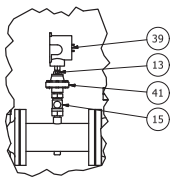


PRESSURE SWITCH
DETAIL F
SCALE 1 / 10

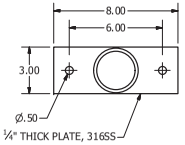


PIPE STAND BASE
SCALE 1 / 4

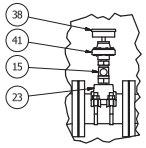


PRESSURE GAUGE
DETAIL G
SCALE 1 / 10

ALL MATERIALS SHOWN ON THIS SHEET WILL BE SUPPLIED BY ROMTEC UTILITIES AND DELIVERED TO THE SITE AFTER THE HOLE HAS BEEN EXCAVATED AND SHORED. THE CONTRACTOR SHALL SUPPLY A CRANE OF SUFFICIENT SIZE TO LOWER ALL THE CONCRETE PIECES INTO THE HOLE SAFELY. THE THE CONTRACTOR SHALL INSTALL THE WET WELL (AND VALVE VAULT AND METERING VAULT IF APPLICABLE). ROMTEC UTILITIES WILL PROVIDE A REPRESENTATIVE FOR TECHNICAL ASSISTANCE ON THE DAY OF INSTALLATION TO ANSWER ANY QUESTIONS THAT MAY ARISE. THE CONTRACTOR IS RESPONSIBLE FOR ALL PLUMBING AND ELECTRICAL CONNECTIONS AND INSTALLATION. ITEMS NOTED AS "BY OTHERS" WILL BE PROVIDED AND INSTALLED BY THE CONTRACTOR. ROMTEC UTILITIES WILL NOT INSTALL ANY OF THE COMPONENTS SHOWN ON THIS PAGE.

© 2017 ROMTEC INC. ALL RIGHTS RESERVED. THESE PLANS AND DRAWINGS MAY NOT BE REPRODUCED, ADAPTED, OR FURTHER DISTRIBUTED, AND NO COMPONENTS MAY BE CONSTRUCTED FROM THESE PLANS, WITHOUT WRITTEN PERMISSION OF ROMTEC, INC.

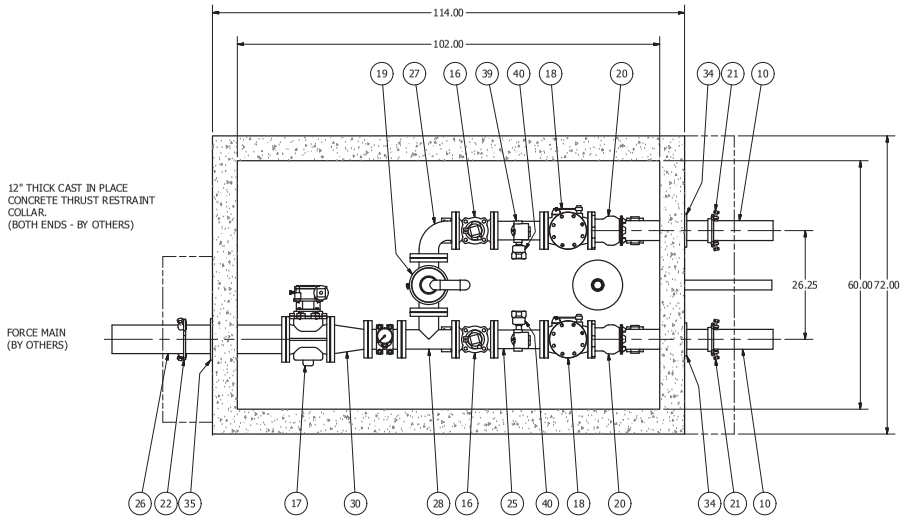


SECTION D-D
SCALE 1 / 15

| PARTS LIST | | | |
|---|---|---|---|
| ITEM | QTY | STOCK NUMBER | DESCRIPTION |
| 1 | 1 | 20-CB000586 | BASE - VV - 586 |
| 3 | 2 | 25-KY0000BR | VALVE KEY - BRACKET |
| 4 | 1 | 25-KY0000GW | VALVE KEY - EXTENDABLE GATE WRENCH |
| 5 | 2 | 25-PS04S89F | PIPE STAND - 304SS - 4in FLANGE |
| 6 | 2 | 25-PS04S92S | PIPE STAND - 304SS - 4in SADDLE |
| 7 | 1 | 25-PS06S89F | PIPE STAND - FLANGE - 6in |
| 8 | 5 | 25-PS0BBASE | PIPE STAND - BASE - 2in - 2 BOLT |
| 9 | 4.0 ft | 40-PP0200S4 | PIPE - 304SS SCH40 - 2in DIA |
| 10 | 7.0 ft | 40-PP0400D0 | PIPE - DI - 4in DIA (2 @ 3.5ft) |
| 11 | 1 | 40-TT0206S4 | NIPPLE - 304SS - 2in DIA x 6in |
| 12 | 5 | 40-TT0H01S4 | NIPPLE - 304SS - 0.5in DIA x 1in |
| 13 | 2 | 40-TT0QHXS6 | HEX NIPPLE - 316SS - .25in NPT |
| 14 | 1 | 41-BV0200S6 | VALVE - BALL - 2in 316SS - 1-4 TURN |
| 15 | 3 | 41-BV0H00S6 | VALVE - BALL - 1/2in 316SS - 1/4 TURN |
| 16 | 2 | 41-PV0400D0 | PLUG VALVE - 4in - DIRECT OP NUT |
| 17 | 1 | 41-PV060GD0 | PLUG VALVE - 6in - GEAR OP NUT |
| 18 | 2 | 42-LS0400D0 | VALVE - SWING CHECK - 4in - LEVER AND SPRING - AVK |
| 19 | 1 | 43-AV020ARI | VALVE - AIR VACUUM RELEASE - 2in - STAINLESS - ARI |
| 20 | 2 | 44-AD04RMAL | FLANGE ADAPTER - 4in - ALPHA |
| 21 | 2 | 44-RG040STR | MECHANICAL JOINT RESTRAINT - 4in |
| 22 | 1 | 44-RG060STR | MECHANICAL JOINT RESTRAINT - 6in |
| 23 | 1 | 44-TS040H00 | TAPPING SADDLE - 4.8in x .5in NPT |
| 24 | 1 | 45-FF040120 | SPOOL - DI - 4in DIA x 8in - FLGxFLG |
| 25 | 2 | 45-FF049999 | CUSTOM SPOOL - STEEL - 4in FLGxFLG WITH PORTS |
| 26 | 1 | 45-FP060420 | SPOOL - DI - 6in DIA x 42in - FLGxPE |
| 27 | 1 | 46-EL0490DI | ELBOW - DI - 4in x 90deg - FLGxFLG |
| 28 | 2 | 46-TE0404DI | TEE - DI - 4in - FLGxFLG |
| 29 | 1 | 48-FL0402D0 | FLANGE - DI - 4in - BLIND - 2in TAP |
| 30 | 1 | 48-RD0604DC | REDUCER - DI - 6in x 4in - CONCENTRIC |
| 31 | 11 | 49-GS040000 | GASKET - FLANGE - 4in |
| 32 | 2 | 49-GS060000 | GASKET - FLANGE - 6in |
| 34 | 2 | 59-LS040800 | LINK SEAL - 8in CORE x 4in PIPE |
| 35 | 1 | 59-LS100600 | LINK SEAL - 10in CORE x 6in PIPE |
| 36 | 5 ft | 70-PP0200P4 | PIPE - PVC SCH40 - 2in DIA |
| 37 | 3 | 76-EL029040 | ELBOW - PVC SCH40 - 2in x 90deg - SLIP |
| 38 | 1 | 81-PG3H00QB | PRESSURE GAUGE - 4.5in - 0-30 PSI - ASHCROFT 1279 |
| 39 | 2 | 81-PS999999 | PRESSURE SWITCH - .5in |
| 40 | 2 | 82-TX999999 | THERMAL FLOW SENSOR - .75in |
| 41 | 3 | 83-GI0HF0QF | DIAPHRAGM SEAL - 0.5in FNPT x 0.25in FNPT - ASHCROFT 101 |
| 42 | 1 | 22-CR000586 | RISER - VV - 586 - 30in |

NOTE:
TWO PIECE VAULT BUT IT CAN BE ASSEMBLED AND SHIPPED AS ONE PIECE.

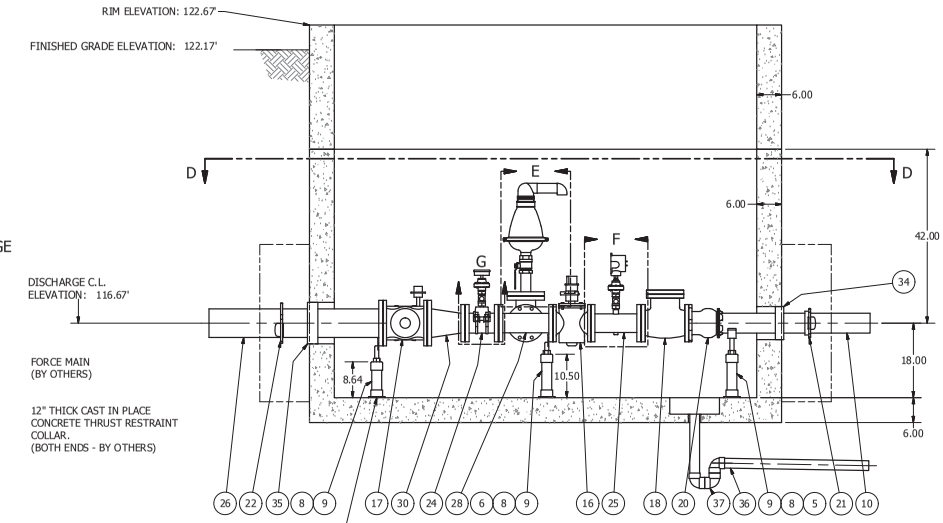


SECTION C-C
SCALE 1 / 15

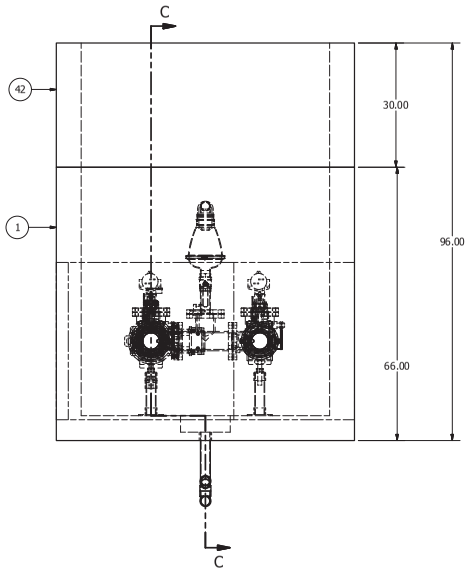


| REV | DESCRIPTION | DATE | APPROV |
|---|---|---|---|
| 3 | UPDATED FOR PRODUCTION LAUNCH ADJUSTED VAULT TO A TWO PIECE SO IT CAN BE BUILT | 8/7/2017 | AD |
| 2 | LARGER OPEN TOP VAULT. UPDATED PART #'s | 6-20-17 | KB |
| 1 | INCREASE VAULT SIZE FOR FITTINGS | 7-15-16 | KB |
| 0 | INITIAL DESIGN | 6-16-15 | AD |

VERIFY SCALE
BAR IS ONE INCH ON ORIGINAL DRAWING
0 1"
IF NOT ONE INCH ON THIS SHEET ADJUST SCALES ACCORDINGLY

DSN - KEVIN BOGAN
DRN - KEVIN BOGAN
CKD -
DATE - 7-14-16

COMPONENT DRAWING

ROMTEC UTILITIES
18240 NORTH BANK ROAD
ROSEBURG, OREGON 97470
(541) 496-9678
FAX (541) 496-0804

BIOLOGICAL NUTRIENT REMOVAL PROJECT

# ML FLOW SPLITTER SCUM VALVE VAULT ASSEMBLY

SHEET
2 OF 2

JOB NUMBER
RMTC
0000