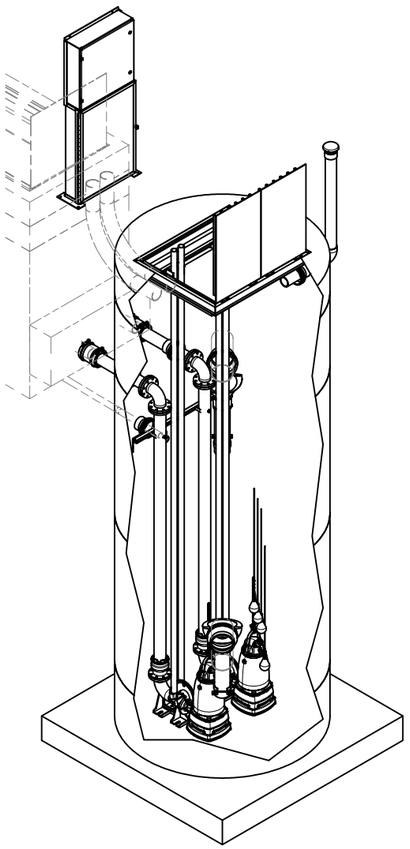

6' DIAMETER WET WELL
4" DISCHARGE PIPING
DUPLEX FLYGT PUMPS
4" VALVE VAULT
FOR DESIGN REVIEW

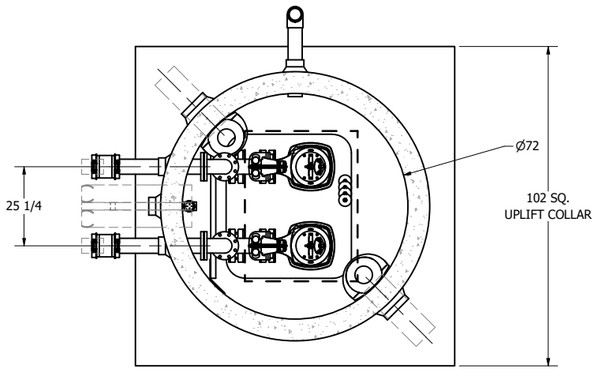

SECTION B-B
SCALE 1 / 24

PRIMARY SENSOR ELEVATION TABLE		
DESCRIPTION	ELEVATION	Δ
INFLUENT INVERT	19.51'	
HIGH LEVEL ALARM	19.27'	0.50'
LAG PUMP START	18.77'	0.50'
LEAD PUMP START	18.27'	1.60'
PUMP STOP	16.67'	2.50'
WELL FLOOR	14.17'	

PUMP PACKAGE
CONFIGURATION: DUPLEX
MODEL: FLYGT NP3153SH
HP: 23
DUTY POINT: 214 GPM AT 163.4 TDH

FEATURES
ALUMINUM HATCH
DUCTILE IRON PIPING, 4"
FLOAT LEVEL SENSORS
STAINLESS GUIDE RAILS
QUICK CONNECT DISCHARGE ELBOWS
DROP BOWL ASSEMBLIES
DISCONNECT PANEL

NOTE: TOP SLAB AND HATCH ARE H-20 OCCASIONAL TRAFFIC RATED

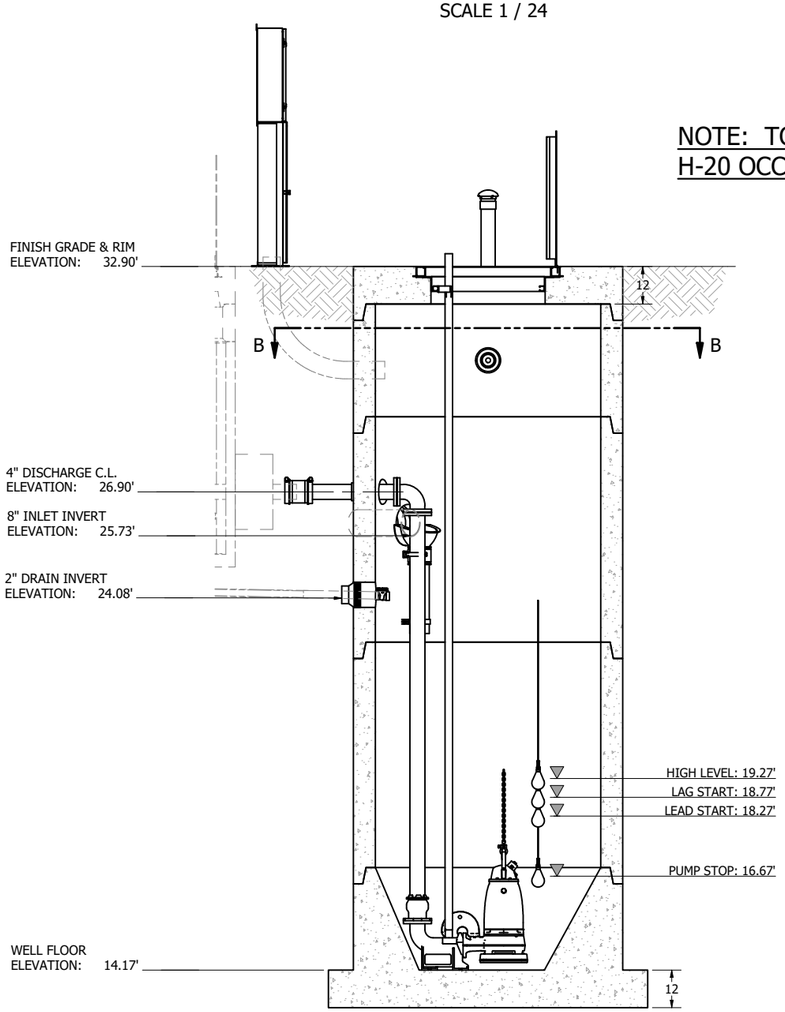

SECTION A-A
SCALE 1 / 24

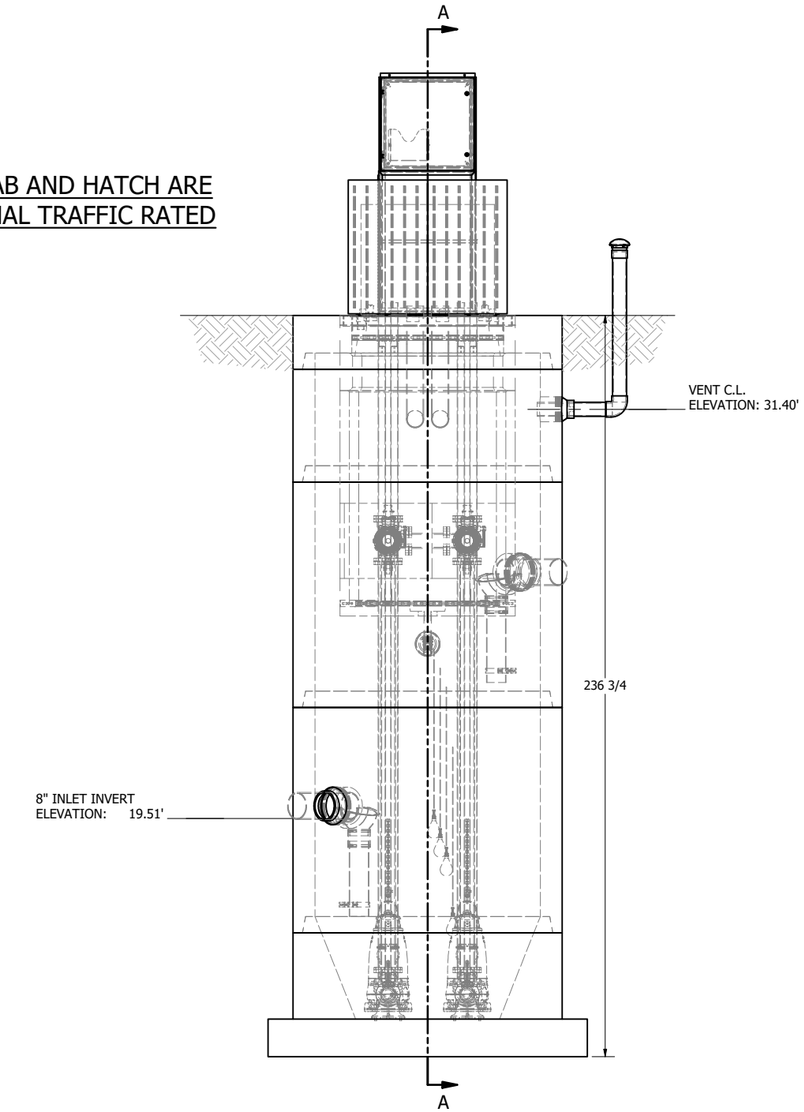

NOTE:
CONDUIT TO CONTROL PANEL (BY OTHERS)
MINIMUM:
(2) FOR POWER
(1) FOR LEVEL SENSING

ROMTEC UTILITIES

© 2020 ROMTEC INC. ALL RIGHTS RESERVED. THESE PLANS AND DRAWINGS MAY NOT BE REPRODUCED, ADAPTED, OR FURTHER DISTRIBUTED, AND NO COMPONENTS MAY BE CONSTRUCTED FROM THESE PLANS, WITHOUT WRITTEN PERMISSION OF ROMTEC, INC.

REV	DATE	DESCRIPTION	BY
3	10/9/2020	STOCK CONCRETE AND FITTINGS	KB
2	8-28-20	ADJUST BASE	KB
1	8-27-20	PIRANHA CONCRETE	KB

REVISION HISTORY

VERIFY SCALE
0 1"
IF NOT ONE INCH ON THIS SHEET, ADJUST SCALES ACCORDINGLY

DSN: KB
DRN: KB
CKD:
DATE: 8-21-20

ROMTEC UTILITIES
18240 NORTH BANK ROAD
ROSEBURG, OREGON 97470
PHONE: (541) 496-9678
WWW.ROMTECUTILITIES.COM

UP FRANZ
PORTLAND, OR
WET WELL ASSEMBLY
QUOTE DRAWING

MECHANICAL SHEET
1 OF 3