ROMTEC UTILITIES OPERATION & MAINTENANCE MANUAL

FOR:

INDIAN SPRINGS STORMWATER (SANTA ROSA, CA)

DATE: July 17, 2014

REVISION: 0

CUSTOMER CONTACT INFORMATION:

Kevin Maple
BKF Engineers
325 Tesconi Circle
Santa Rosa, CA 95401
(707) 583-8500
kmaple@bkf.com

ROMTEC UTILITIES
18240 North Bank Road ~ Roseburg ~ OR ~ 97470
541.496.9678(ph) / 541.496.0804(fx)
romtec3@romtecutilities.com

INDEX

1. INTRODUCTION

1.01 ABOUT THIS DOCUMENT
1.02 CONTACT INFORMATION
1.03 ROMTEC UTILITIES LIMITED WARRANTY

2. PERMITS & REPORTS

2.01 PERMITS
2.02 START-UP REPORTS
2.03 INSPECTION REPORTS

3. MECHANICAL

3.01 SCOPE OF SUPPLY: PRODUCTS
3.02 WET WELL
- 3.02.1 WET WELL COMPONENT DRAWING(S)
- 3.02.2 WET WELL PRODUCTION DRAWING
- 3.02.3 WET WELL HATCH DRAWING
- 3.02.4 WET WELL RELATED DATA SHEETS

3.03 PUMPS
- 3.03.1 PUMP SPECIFICATIONS
- 3.03.2 PUMP DRAWINGS
- 3.03.3 PUMP PERFORMANCE CURVE
- 3.03.4 PUMP OPERATION & MAINTENANCE MANUAL
- 3.03.5 RECOMMENDED MAINTENANCE
- 3.03.6 PUMP RELATED DATA SHEETS

3.04 LEVEL SENSORS
- 3.04.1 PRIMARY LEVEL SENSOR
- 3.04.2 SECONDARY LEVEL SENSOR

4. ELECTRICAL

4.01 CONTROL PANEL DRAWING
4.02 ELECTRICAL SCHEMATICS
4.03 CONTROL PANEL DATA SHEETS
4.04 INSTRUCTIONS FOR CONDUIT ENTRY

5. APPENDIX

A. ALTISTART USER MANUAL
B. PC 300 START-UP GUIDE

1. INTRODUCTION

This section contains the necessary information and procedures for the understanding and use of this document by the client and other parties of interest.

This section is structured as follows:

1.01 ABOUT THIS DOCUMENT

1.02 CONTACT INFORMATION

1.03 ROMTEC UTILITIES LIMITED WARRANTY

1.01 ABOUT THIS DOCUMENT

1. Document Identification

The information in this document is the Operation & Maintenance Manual (O&M) provided by Romtec Utilities, Inc., herein referred to as Romtec Utilities for the project listed below:

Name (herein referred to as “the project”): Indian Springs Stormwater

Location (herein referred to as “the site”): Santa Rosa, California

Document Date: 7/17/2014

Revision #: 0

2. Document Description

This document contains all the as-built drawings, operation and maintenance manuals, and manufacturer warranties for the associated mechanical and electrical components of this project.

3. Document Delivery

The electronic copy of the Romtec Utilities Operation & Maintenance Manual will be provided to the customer at start-up of the system.

1.02 CONTACT INFORMATION

Customer Contact:

Kevin Maple
BKF Engineers
325 Tesconi Circle
Santa Rosa, CA 95401
(707) 583-8500
Kmaple@bkf.com

Pump Station Supplier:

Romtec Utilities, Inc.
18240 North Bank Rd.
Roseburg, OR 97470
541-496-3541; Fax: 541-496-0803
romtec3@romtec.com; www.romtecutilities.com

Wet Well & Related Equipment:

Wet Well:
Oldcastle Pre-Cast
2960 S. Highway 99
Stockton, CA 95215
209-466-4212; Fax: 209-595-7321

Hatch:
USF Fabrication
3200 West 84 Street
Hialeah, FL 33108
800-258-6873; Fax: 305-882-1577
www.usffab.com

Sealant:
ConSeal
P.O. Box 176
New Carlisle OH 45344
800.332.7325; Fax: 937-845-3587
www.conseal.com

1.02 CONTACT INFORMATION

Joint Tape:
Tapecoat
PO Box 631
Evanston, IL 60204-0631
1527 Lyons St.
Evanston, IL 60201-3551
800-758-6041; Fax: 800/332-8273
www.tapecoat.com

Pipe Boot:
NPC
250 Elm Street P.O. Box 301
Milford, NH 03055, U.S.A.
800-626-2180; Fax: 603-673-7271
www.npc.com

Barrel Gasket:
Hamilton Kent
1 800-268-8479; Fax: 1 888 674-6960
www.hamiltonkent.com

Swing Check Valve:
Val-Matic Valves
905 Riverside Drive
Elmhurst, IL 60126
630-941-7600 Fax: 630-971-8042
valves@valmatic.com; www.val-matic.com

Coupling and Romagrips:
Romac Industries, Inc.
21919 20th Avenue SE
Bothell, WA 98021
1-800-426-9341
http://www.romac.com/

Pumps & Related Equipment:

Ebara
1651 Cedar Line Drive
Rock Hill, SC 29730
803-327-5005; Fax: 803-327-5097
Info@pumpsebara.com

1.02 CONTACT INFORMATION

Level Sensors:

Pressure Transducer:
American Sensor Technologies
450 Clark Dr., Mt. Olive, NJ 07828
973-448-1901; Fax: 973-448-1905
info@astsensors.com

Floats:
Noltaniva
Kasseler Str. 30
D-35091 Colbre (Germany)
+49(0)6421/98590; Fax: +49(0)6421/985928
info@nolta.de; www.nolta.de

Electrical:

Control Panel Supplier:
Romtec Utilities, Inc.
18240 North Bank Rd.
Roseburg, OR 97470
541-496-3541; Fax: 541-496-0803
romtec3@romtec.com; www.romtecutilities.com

1.03 ROMTEC UTILITIES LIMITED WARRANTY

Romtec Utilities Limited Warranty

Romtec Utilities, Inc. (herein referred to as "Romtec Utilities") warrants that the equipment supplied will be free from defects in material and workmanship under normal use and service, when used in accordance with the Romtec Utilities procedures as set forth below for a period of one year from date of acceptance (acceptance is defined as the date Romtec Utilities' "Start-Up" report is completed) or one year and six months from installation of the wet well (or delivery of the wet well or the date that the wet well was ready to deliver), whichever comes first. The obligation of Romtec Utilities under this warranty is limited to replacing or repairing any defective part (failure of other manufacturer supplied components will be addressed according to the individual manufacturer's warranty, the periods of which, and the manufacturer's obligations therein may differ from Romtec Utilities' Warranty). This warranty extends only to Romtec Utilities' direct customer (as named in the Romtec Utilities Purchase Order), herein called "customer", and not to any person or entity with whom customer has business relationships, or any party other than customer.

Note: This warranty is in lieu of all other warranties, express or implied, including but not limited to the implied warranties of merchantability and fitness for purpose, which implied warranties are excluded. Romtec shall not be liable for consequential or incidental damages.

1. Components resold or supplied with Romtec Utilities materials

Certain components are warrantable directly by the original manufacturer for periods between 90 days and 5 years. Replacement for, repair or refund of defective workmanship or material under normal use shall be remunerated directly with the manufacturer of the component. Examples of components would be generators, manual cranes, pumps, pump controls, valves, etc.

2. Warranty voidable

Romtec Utilities' representative must be on-site for oversight of assembly during installation of the wet well. Wet Well installation that is performed without the presence of a Romtec Utilities representative shall void all warranties related to the wet well structure and its performance.

Start-up that is performed without the presence of a Romtec Utilities representative shall void all warranties.

3. Claims of defective manufacture

Claims that the merchandise was incorrectly manufactured or that is defective in any way must be made directly to Romtec Utilities on a product-by-product basis. All claims must be made within 72 hours of the defective condition, or the time when the defect should have been discovered, whichever is earlier. All claims must include the following:

a. A detailed description of the specific problem, failure, or other event giving rise to the claim; and

1.03 ROMTEC UTILITIES LIMITED WARRANTY

b. Supporting photographs or videos; and

c. Specific location; and

d. Names and phone numbers of individuals who can substantiate the claim, but who do not work for contractor.

4. Failure of pump station

Romtec Utilities pump stations pump all types of water containing all kinds of materials. Sometimes pumps may clog or power may be lost and the pump station will fail to operate. If your station fails to operate, Romtec Utilities will suggest a local service company to evaluate the problem. If it is a warranty issue, Romtec Utilities will repair and/or replace per the terms of this warranty. If however, the pumps are simply "clogged" or the power is simply lost Romtec Utilities will advise you that it is not a warranty issue and you will simply pay for the service call and the associated services.

5. Action in event of established claim

In the event it is determined that goods have been incorrectly manufactured or are defective, the liability of Romtec Utilities shall be limited to, at its option, repair or replacement of the goods. Romtec Utilities also reserves the right to establish reasonable time limits for completion of any specific installation tasks resulting from the replacement of defective merchandise.

6. No third party claims

Under no circumstances shall Romtec Utilities be responsible for any damage claims by any party other than claims by Romtec Utilities direct customers.

7. Release and hold harmless

Contractor releases and agrees to defend, indemnify, and hold Romtec Utilities harmless from and against any and all claims, demands, actions, and causes of action for any matters arising out of or connected with the materials whereby the contractor is responsible for errors or omissions.

8. Specific limitations

Romtec Utilities' liability under the foregoing warranty and under the transaction of which this document is a part is limited as follows:

a. Romtec Utilities has designed the lift station supplied under this project to meet a specific design standard and specific set of parameters as dictated to Romtec Utilities by its customer as set forth in the "Lift Station Design Form" located in the Romtec Utilities Scope of Supply and Design Submittal.

b. Romtec Utilities' Scope of Supply & Design Submittal is a part of and limited by CUSTOMER'S site civil and electrical plans.

c. Romtec Utilities makes no guarantees that any of its supply will fit on customer's site and/or building. However, at customer's request,

1.03 ROMTEC UTILITIES LIMITED WARRANTY

Romtec Utilities will provide suggested layouts for the customer's project. Ultimately, the customer decides to accept or reject any given layout.

d. Romtec Utilities cannot make final layout or equipment placement judgments at the site (i.e. generator or control panel "fit" in or out of a building). It is the responsibility of customer's site engineer and contractor to check dimensions, etc. If customer has not accepted (or received) final dimensions, etc., please request further definition before approval. Romtec Utilities is not responsible for items that do not fit on the site.

e. It is Romtec Utilities' customer's responsibility and obligation to review the Romtec Utilities Scope of Supply & Design Submittal to insure it meets with customer approval relative to any customer third party agreements.

f. Romtec Utilities is not responsible for any aspect of the construction and installation of the Romtec Utilities lift station. The Contractor bears sole responsibility for installation of products manufactured by Romtec Utilities. The Romtec Utilities Scope of Supply and Design Submittal defines Romtec Utilities scope of supply relative to equipment, documentation, start-up services and warranty.

g. If Romtec Utilities is on site during the construction/installation of the Romtec Utilities lift station it is only as an advisor. Romtec Utilities is never on site to perform any construction and/or installation tasks.

h. Romtec Utilities designs and prefabricates its lift station system to enable contractors to install the Romtec Utilities system quickly and completely. However, Romtec Utilities has made no representation and/or claims as to "how long" it will take to construct/install the Romtec Utilities system.

Note: If any Romtec Utilities-supplied part is found to be defective and/or has been manufactured in error relative to this document, Romtec Utilities will repair and/or replace that part at Romtec Utilities' expense. Romtec Utilities does not offer, nor will Romtec Utilities accept, any charges and/or claims by anyone relative to the time it takes to install/construct the Romtec Utilities system and or claims for delays relative to a part that has to be repaired and/or replaced by Romtec Utilities.

i. Romtec Utilities' responsibility is to its direct customer. We want to help all parties, but we are ultimately responsible only to our direct customer. If Romtec Utilities' direct customer has hired a sub-contractor, Romtec Utilities will communicate with that sub-contractor through a representative of Romtec Utilities' direct customer. In other words, Romtec Utilities will not direct and/or advise any sub-contractor. Instead, Romtec Utilities will communicate directly with its

"direct customer" and they will communicate with their sub-contractors, engineers, and/or owners.

j. The Romtec Utilities design reflects all elevations and/or orientations to an accuracy of +/- 0.10'. Romtec Utilities does not claim to manufacture any aspect of its lift station systems to absolute elevations. It is simply not possible in the general underground construction world to meet absolutes. Therefore, any owner and/or installer of a Romtec Utilities system is accepting the Romtec Utilities system proposed herein to the plus or minus 0.10' offered by Romtec Utilities.

9. Performance Characteristics and Start-Up.

Note: Start-up services are only supplied by Romtec Utilities if included in the proposal and subsequent purchase order.

a. The lift station is a sophisticated device that can be operated in many different ways. The Romtec Utilities Scope of Supply & Design Submittal defines Romtec Utilities' approach to the operation of the lift station.

Note: While there are many ways to vary and/or adjust "operational parameters" within the overall lift station, Romtec Utilities is only prepared to start-up per its own parameters (as specified in the customer's design criteria, see attached).

b. Romtec Utilities' obligation is to show that the station can run as designed to meet specific design criteria as shown in its Scope of Supply & Design Submittal. It is understood that the regulating agency may want to test many other scenarios. This will not be part of the standard Romtec Utilities start-up procedures and training. At start-up, Romtec Utilities will only prove that the station can run at the pre-specified design parameters.

c. Romtec Utilities is not an operator, installer or an electrical interconnector for the lift stations and equipment it supplies.

d. During start-up, Romtec Utilities is completely in charge. Romtec Utilities' start-up technician will start-up and "prove" the station per the approved Romtec Utilities Scope of Supply & Design Submittal. After the lift station is accepted other parties may choose to adjust and/or vary the operational parameters to suit their specific preference. However, Romtec Utilities will not be involved with these issues either during or after start-up, and is not responsible for problems arising from any adjustments or variations by such other parties.

1.03 ROMTEC UTILITIES LIMITED WARRANTY

10. Training (if included in the proposal).

Note: Training services are only supplied by Romtec Utilities if included in the proposal and subsequent purchase order.

a. Romtec Utilities will perform system training at no additional cost as part of its scope of supply if the training is scheduled for the day after start-up. If training is scheduled for any other time than the day after start-up, Romtec Utilities will require prepayment of the additional costs (incurred as a result of the need to reschedule) prior to confirming the alternate training schedule. If training is scheduled for any other time other than the day after start-up, Romtec Utilities will require prepayment of the additional costs incurred as a result of the need to reschedule.

END

OF

SECTION

2. PERMITS & REPORTS

Keep all permits and reports in this section for the project. Engineer or contractor to insert permits and reports related to this pump station. The Romtec Utilities start-up reports will be sent after the start-up is complete. Please insert in this section when received.

This section is structured as follows:

2.01 PERMITS

2.02 START-UP REPORTS

2.03 INSPECTION REPORTS

2.01 PERMITS

PAGE IS INTENTIONALLY LEFT BLANK

(ENGINEER/CONTRACTOR TO INSERT PERMITS FOR THIS PUMP STATION)

2.02 START-UP REPORTS

PAGE IS INTENTIONALLY LEFT BLANK

(THE ROMTEC UTILITIES START-UP REPORTS WILL BE SENT AFTER THE START-UP IS COMPLETE. PLEASE INSERT IN THIS SECTION)

2.03 INSPECTION REPORTS

PAGE IS INTENTIONALLY LEFT BLANK

(ENGINEER/CONTRACTOR TO INSERT INSPECTION REPORTS FOR THIS PUMP STATION)

END

OF

SECTION

3. MECHANICAL

This section contains information pertaining to the mechanical design of this system. There is both technical information and related drawings necessary for the system construction.

This section is structured as follows:

3.01 SCOPE OF SUPPLY: PRODUCTS

3.02 WET WELL

- 3.02.1 WET WELL COMPONENT DRAWING(S)
- 3.02.2 WET WELL PRODUCTION DRAWING(S)
- 3.02.3 WET WELL HATCH DRAWING
- 3.02.4 WET WELL RELATED DATA SHEETS

3.03 PUMPS

- 3.03.1 PUMP SPECIFICATIONS
- 3.03.2 PUMP DRAWINGS
- 3.03.3 PUMP PERFORMANCE CURVE
- 3.03.4 PUMP OPERATION & MAINTENANCE MANUALS
- 3.03.5 PUMP RECOMMENDED MAINTENANCELEVEL SENSORS
- 3.03.6 PUMP DATA SHEETS

3.04 LEVEL SENSORS

- 3.04.1 PRIMARY LEVEL SENSOR
- 3.04.2 SECONDARY LEVEL SENSOR

3.01 SCOPE OF SUPPLY: PRODUCTS

ROMTEC UTILITIES SUPPLY FOR PUMP STATION INCLUDES:

WET WELL & RELATED EQUIPMENT

QTY	ITEM
1	BASE ASSEMBLY
1	BASE - WW - 10ft - RU FLAT BASE - 12ft X 14ft
1	PUMP SHELF - 10ft X 3.125in
2	DISCHARGE ELBOW - 12in - EBARA - LL300Y
2	ANCHOR KIT - DISCHARGE ELBOW (1 3-16in BOLTS)
2	COUPLING - ROMAC - RFCA - 12in FBEC
1	BARREL - 10ft DIA X 2ft H
1	BARREL - 10ft DIA X 6ft H
1	TOP SLAB ASSEMBLY
1	HATCH - WW - 10ft PED - DUPLEX - 55788 - 54 x 88
1	TOP SLAB - WW - 10ft PED - DUPLEX
2	UGBB - 3in - EBARA
2	BOLT & NUT KIT - UPPER GUIDE BAR BRACKET - 3-8in
2	CABLE HANGER ASSEMBLY
1	4 INCH PVC VENT
1	VENT - MUSHROOM CAP
1	ADAPTOR - 4in SCH80 - MALE THD X SLIP
1	4in PVC - SCH 80 X 24in
1	4 INCH PVC - SCH 80 X 48in
1	ELBOW - PVC - 4in SCH 80 - 90 DEGREE - SLIP X SLIP
2	DISCHARGE PIPE SUPPORT - WALL BRACKET SET
4	DISCHARGE CLAMP BOLT - 1-2 X 1 SS BOLT, WASHER, FIBER LOCK NUT
2	DISCHARGE PIPE SUPPORT - BOLT KIT
1	SHIPPING CRATE
3	BARREL GASKET
1	STILLING WELL SUPPORT BRACKET - STAINLESS
4	LIFTING CLUTCH - 8 TON
2	CORD GRIP - .46 - .56 SS
2	LINK - .62in - OBLONG WELDED CORROSION RES - EBARA PUMPS
2	BOW SHACKLE - 1-2in - SS W-SCREW PIN
4	CHAIN - S5 5-16in 316SS (2 @ 2FT)
2	CORD GRIP - 1.000in - 1.240 DIA SS
2	LIFTING SLING - .125in SS CABLE (2 @ 12 FT)
1	KOR-N-SEAL - 36in X 30in PIPE
1	KOR-N-SEAL - 8in CORE -1.70 THRU 4.80 PIPE
2	KOR-N-SEAL - 16in CORE - 12in PIPE
6	GASKET - FLANGE - 12in X 1/8in
1	6" PVC PIPE - PERFORATED X 108in
112	TAPECOAT - 6in X .65mils X LFT
130	SEALANT - 1in X 1in X 14.5ft CS-202

3.01 SCOPE OF SUPPLY: PRODUCTS

1	NEVER SIEZE - TUBE
2	FLOAT - NOLTA - MS1 - 20m
1	PRESSURE TRANSDUCER - 4-20 ma - 5 PSI - CL1 DIV1 - 50ft CABLE
1	BRACKET - TRANSDUCER - HANGING
1	DISCHARGE PIPE BRACKET - 16in
2	PUMP - EBARA - 300DLFU630 - 40HP
40	PIPE - 304SS - 3in SCH10 (4@ 10 FT)
2	VALVE - SWING CHECK - 12in - SG BUSTER
2	SLEEVE - 12 IN - STAR - SOLID DI SHORT
4	ROMAGRIP ACCESSORY PACK - 12in DI MJ
2	SPOOL - FLG X PE - 12in X 30in - DI
2	SPOOL - FLG X PE - 12in X 72in - DI
2	ELBOW - DI - 12in - 90 DEG - FLG X FLG

CONTROL PANEL/ELECTRICAL & COMMUNICATION

QTY	ITEM
1	PC3000 Duplex Pump Controller w/ 2-Float Back-up System, 480V/3-PHASE - NEMA 4 Enclosure

3.02 WET WELL

This section contains information pertaining to the Wet Well. There is both technical information and related drawings necessary for the Wet Well construction.

This section is structured as follows:

3.02.1 WET WELL COMPONENT DRAWING(S)

3.02.2 WET WELL PRODUCTION DRAWING(S)

3.02.3 WET WELL HATCH DRAWING

3.02.4 WET WELL RELATED DATA SHEETS

- CONSEAL
- TAPECOAT
- KOR-N-SEAL
- BARREL GASKETS
- SWING CHECK VALVE
- COUPLING ROMAC RFCA
- ROMAGRIP ACCESSORY PACK

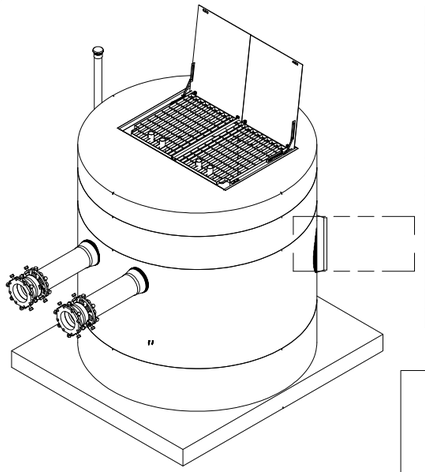

SENSOR AND ELEVATION TABLE		
LEVEL ELEVATION	DISTANCE BETWEEN POINTS	SET POINT DESCRIPTION
345.12		INVERT IN
349.80		BACK UP PUMPS START
	1.00	SENSOR SPACING
348.80		BACK UP PUMPS STOP
	0.00	SENSOR SPACING
348.30		BACK UP HL ALARM
348.80		HIGH LEVEL ALARM
	0.45	SENSOR SPACING
348.35		LAG PUMP START
	1.95	SENSOR SPACING
346.40		LEAD PUMP START
	3.00	SENSOR SPACING
343.40		PUMP STOP
	3.00	DISTANCE TO FLOOR
340.40		FLOOR ELEVATION

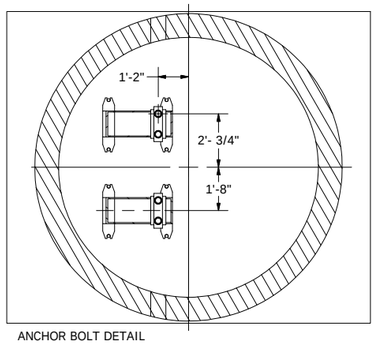

ANCHOR BOLT DETAIL

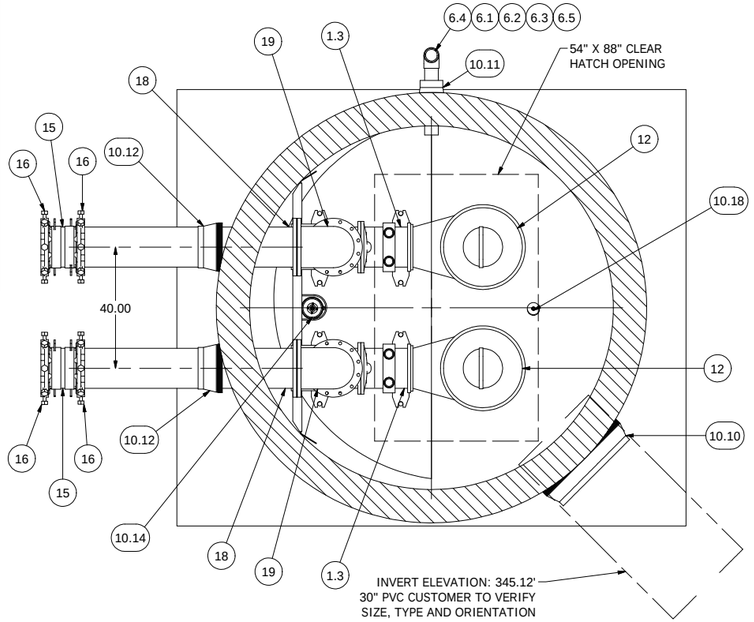

NOTE: WET WELL TOP SLAB IS PEDESTRIAN RATED

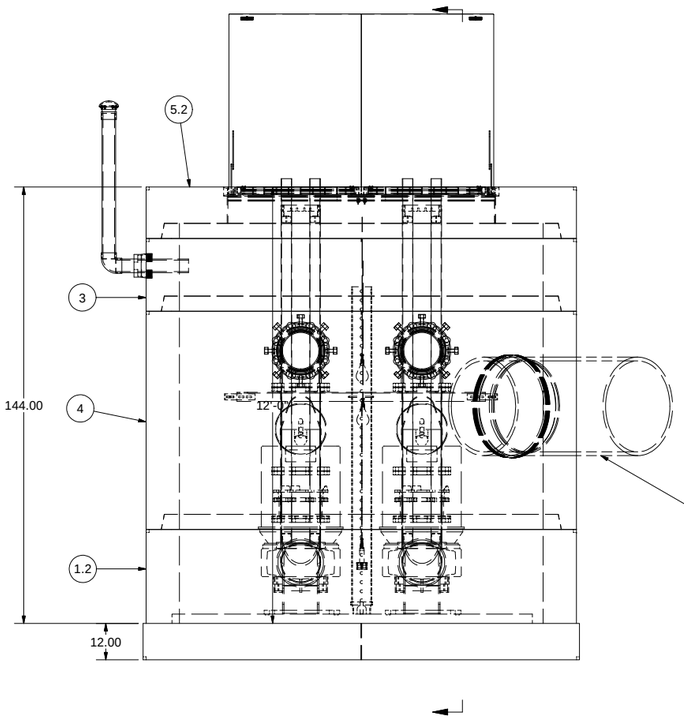

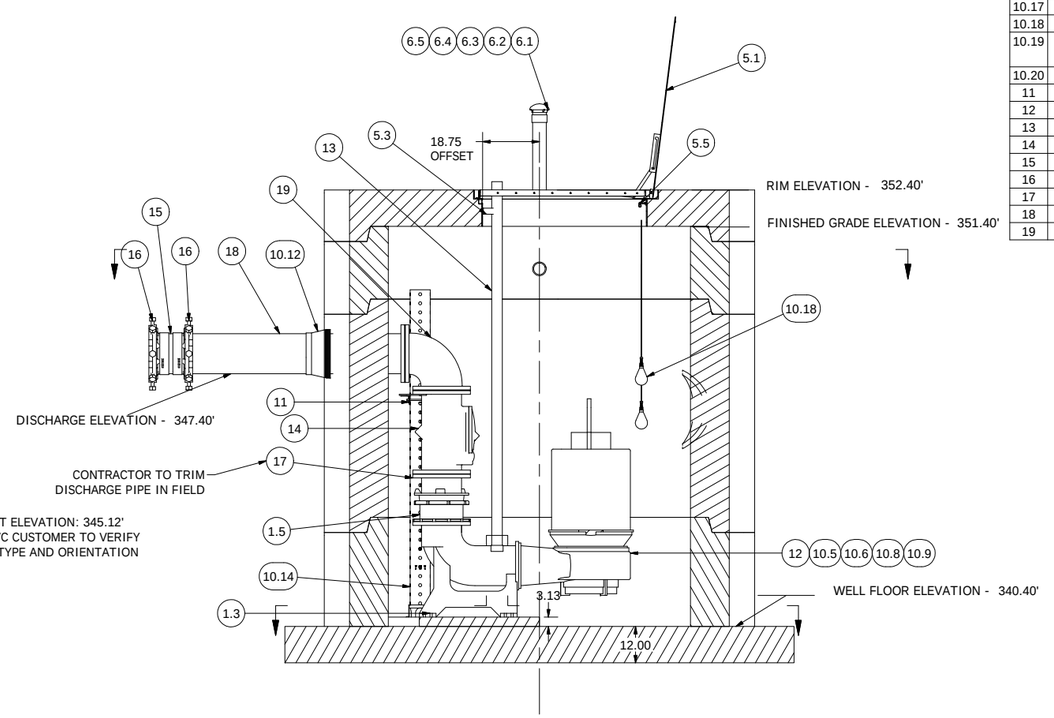

Parts List			
ITEM	QTY	STOCK NUMBER	DESCRIPTION
1	1	10-XXXX	BASE ASSEMBLY
1.1	2	31-6040	ANCHOR KIT - DISCHARGE ELBOW
1.2	1	10-5168	BASE - WW - 10ft - RU FLAT BASE - 12ft X 14ft
1.3	2	31-4872	DISCHARGE ELBOW - 12in - EBARA - LL300U
1.4	1	10-5199	PUMP SHELF - 10ft X 3.125in
1.5	2	42-5257	COUPLING - ROMAC - RFCA - 12in FBEC
3	1	12-5902	BARREL - 10ft DIA X 2ft H
4	1	12-5906	BARREL - 10ft DIA X 6ft H
5	1	14-XXXX	TOP SLAB ASSEMBLY
5.1	1	13-5328	HATCH - WW - 10ft PED - DUPLEX - 55788 - 54 x 88
5.2	1	14-5387	TOP SLAB - WW - 10ft PED - DUPLEX
5.3	2	18-4057	UGBB - 3in - EBARA
5.4	2	18-6031	BOLT & NUT KIT - UPPER GUIDE BAR BRACKET - 3-8in
5.5	2	18-6115	CABLE HANGER ASSEMBLY
6	1	18-5157	4 INCH PVC VENT
6.1	1	18-5427	VENT - MUSHROOM CAP
6.2	1	48-5455	ADAPTOR - 4in SCH80 - MALE THD X SLIP
6.3	1	48-5464	4in PVC - SCH 80 X 24in
6.4	1	48-6264	4 INCH PVC - SCH 80 X 48in
6.5	1	48-6266	ELBOW - PVC - 4in SCH 80 - 90 DEGREE - SLIP X SLIP
7	2	18-6009	DISCHARGE PIPE SUPPORT - WALL BRACKET SET
8	4	18-FAST	DISCHARGE CLAMP BOLT - 1-2 X 1 SS BOLT, WASHER, FIBER LOCK NUT
9	2	18-FAST	DISCHARGE PIPE SUPPORT - BOLT KIT
10	1	18-XXXX	SHIPPING CRATE
10.1	3	12-ROM	BARREL GASKET
10.2	1	18-4874	STILLING WELL SUPPORT BRACKET - STAINLESS
10.3	4	18-6020	LIFTING CLUTCH - 8 TON
10.4	2	32-4643	CORD GRIP - .46 - .56 SS
10.5	2	32-5506	LINK - .62in - OBLONG WELDED CORROSION RES - EBARA PUMPS
10.6	2	32-5943	BOW SHACKLE - 1-2in - SS W-SCREW PIN
10.7	4	32-5999	CHAIN - S5 5-16in 316SS (2 @ 2FT)
10.8	2	32-6065	CORD GRIP - 1.000in - 1.240 DIA SS
10.9	2	32-6354	LIFTING SLING - .125in SS CABLE (2 @ 12 FT)
10.10	1	43-4194	KOR-N-SEAL - 34in X 30in IPS PIPE
10.11	1	43-5186	KOR-N-SEAL - 8in CORE -1.70 THRU 4.80 PIPE
10.12	2	43-5193	KOR-N-SEAL - 16in CORE - 12in PIPE
10.13	6	47-5267	GASKET - FLANGE - 12in X 1/8in
10.14	1	48-XXXX	6" PVC PIPE - PERFORATED X 108in
10.15	112	51-5949	TAPECOAT - 6in X .65mils X LFT
10.16	130	51-6081	SEALANT - 1in X 1in X 14.5ft CS-202
10.17	1	51-ROM	NEVER SIEZE - TUBE
10.18	2	60-4574	FLOAT - NOLTA - MS1 - 20m
10.19	1	60-4896	PRESSURE TRANSDUCER - 4-20 ma - 5 PSI - CL1 DIV1 - 50ft CABLE
10.20	1	62-4561	BRACKET - TRANSDUCER - HANGING
11	1	18-XXXX	DISCHARGE PIPE BRACKET - 16in
12	2	30-5500	PUMP - EBARA - 300DLFU630 - 40HP
13	40	40-4128	PIPE - 304SS - 3in SCH10 (4@ 10 FT)
14	2	41-4173	VALVE - SWING CHECK - 12in - SG BUSTER
15	2	42-4767	SLEEVE - 12 IN - STAR - SOLID DI SHORT
16	4	42-5314	ROMAGRIP ACCESSORY PACK - 12in DI MJ
17	2	45-5319	SPOOL - FLG X PE - 12in X 30in - DI
18	2	45-5321	SPOOL - FLG X PE - 12in X 72in - DI
19	2	46-5266	ELBOW - DI - 12in - 90 DEG - FLG X FLG

NOTE: ALL DIMENSIONS AND ELEVATIONS SHOWN ARE NOMINAL DIMENSIONS. IT IS THE RESPONSIBILITY OF THE ON-SITE CONTRACTOR OR ROMTEC UTILITIES CUSTOMER (NOT ROMTEC UTILITIES) TO VERIFY THE ACCURACY OF ANY CRITICAL DIMENSIONS OR ELEVATIONS PRIOR TO SETTING OR INSTALLING ANY EQUIPMENT.

10' DIAMETER WET WELL
12"DISCHARGE PIPING
300DLFU630 EBARA PUMPS

ALL MATERIALS SHOWN ON THIS SHEET WILL BE SUPPLIED BY ROMTEC UTILITIES AND DELIVERED TO THE SITE AFTER THE HOLE HAS BEEN EXCAVATED AND SHORED. THE CONTRACTOR SHALL SUPPLY A CRANE OF SUFFICIENT SIZE TO LOWER ALL THE CONCRETE PIECES INTO THE HOLE SAFELY. THE THE CONTRACTOR SHALL INSTALL THE WET WELL (AND VALVE VAULT AND METERING VAULT IF APPLICABLE). ROMTEC UTILITIES WILL PROVIDE A REPRESENTATIVE FOR TECHNICAL ASSISTANCE ON THE DAY OF INSTALLATION TO ANSWER ANY QUESTIONS THAT MAY ARISE. THE CONTRACTOR IS RESPONSIBLE FOR ALL PLUMBING AND ELECTRICAL CONNECTIONS AND INSTALLATION. ITEMS NOTED AS "BY OTHERS" WILL BE PROVIDED AND INSTALLED BY THE CONTRACTOR. ROMTEC UTILITIES WILL NOT INSTALL ANY OF THE COMPONENTS SHOWN ON THIS PAGE.

© 2013 ROMTEC INC. ALL RIGHTS RESERVED. THESE PLANS AND DRAWINGS MAY NOT BE REPRODUCED, ADAPTED, OR FURTHER DISTRIBUTED, AND NO COMPONENTS MAY BE CONSTRUCTED FROM THESE PLANS, WITHOUT WRITTEN PERMISSION OF ROMTEC, INC.

REVISION HISTORY			
REV	DESCRIPTION	DATE	APPROV
1	PER COMMENT LOG	9-16-13	NA
2	PER LAUNCH MEETING	2-26-14	NNA
2	REVISED BASE TO HAVE 3ft RISE	3-10-14	AD

VERIFY SCALE
BAR IS ONE INCH ON ORIGINAL DRAWING
0 1"
IF NOT ONE INCH ON THIS SHEET ADJUST SCALES ACCORDINGLY

DSN - NG
DRN - NG
CKD - AD
DATE - 8/13/13

COMPONENT DRAWING

ROMTEC UTILITIES
18240 NORTH BANK ROAD
ROSEBURG, OREGON 97470
(541) 496-9678
FAX (541) 496-0804

INDIAN SPRINS SW
10' WET WELL - 12" DISCHARGE

SHEET
1 OF 1

JOB NUMBER
RMTC
0000

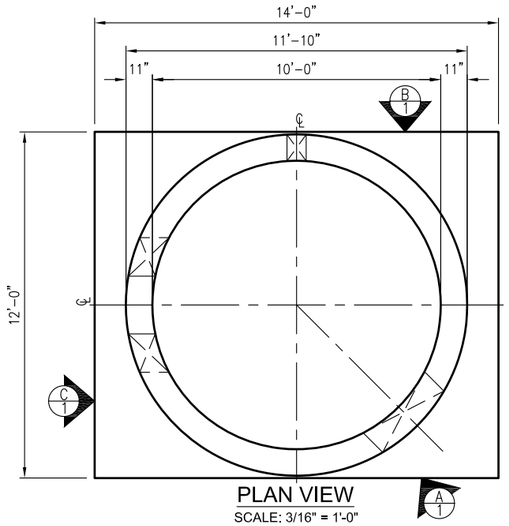

PLAN VIEW

SCALE: 3/16" = 1'-0"

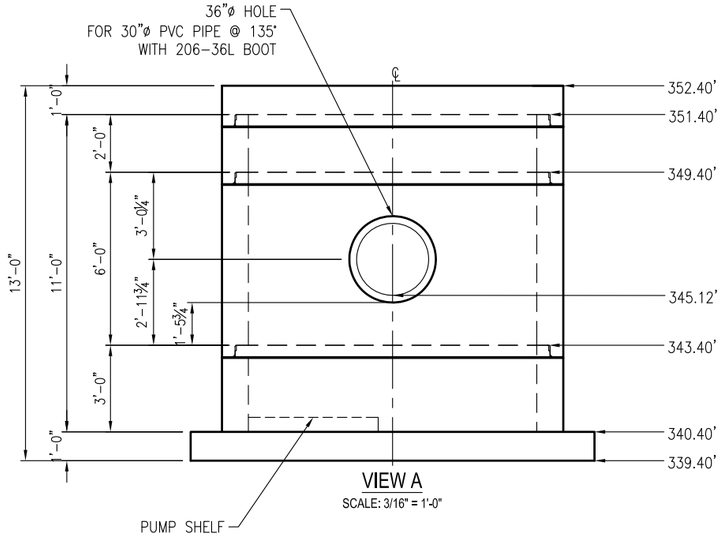

VIEW A

SCALE: 3/16" = 1'-0"

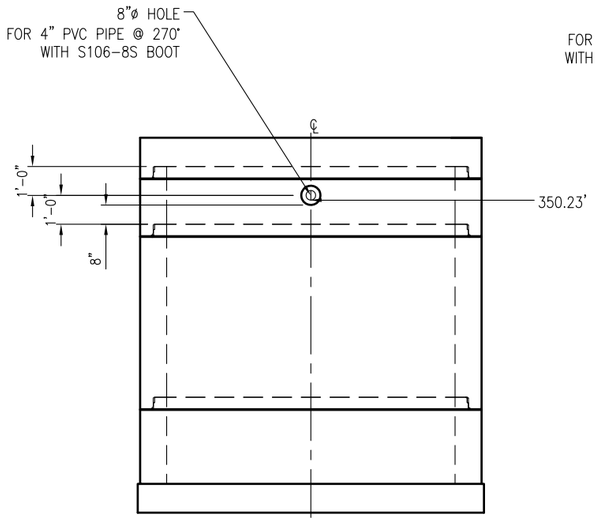

VIEW B

SCALE: 3/16" = 1'-0"

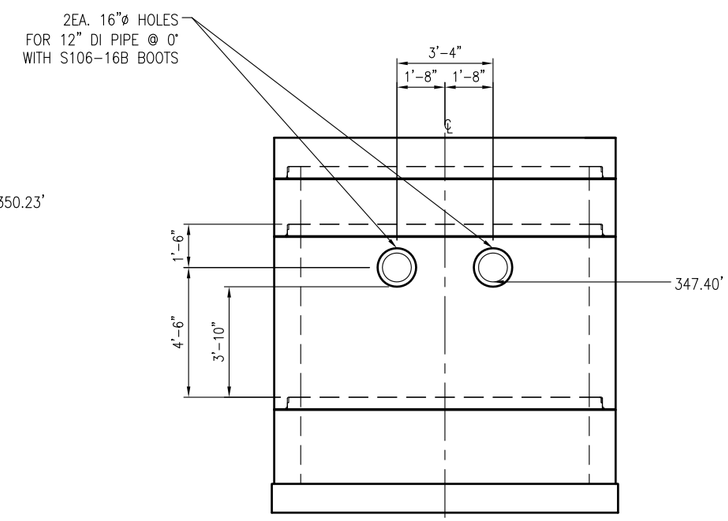

VIEW C

SCALE: 3/16" = 1'-0"

STRUCTURAL NOTES:

LOADS:
- H20 TRAFFIC
- 150 PCF CONCRETE DENSITY; 120 PCF SOIL DENSITY
- H20 SURCHARGE: 2 FT ABOVE FILL TO 8 FT BELOW GRADE
- DRY SOIL LATERAL LOAD - 40 PCF
- WET SOIL LATERAL LOAD - 80 PCF
- WATER TABLE - BELOW VAULT

DESIGN SPECIFICATIONS
- ACI-318-11 BUILDING CODE
- ASTM C 478 STANDARD SPECIFICATIONS FOR REINFORCED CONCRETE MANHOLE SECTIONS

MATERIALS:
- CONCRETE - 28 DAY COMPRESSIVE STRENGTH f'c =6000 PSI
- REBAR - ASTM A 706 GRADE 60
- CEMENT - ASTM C150
- FLYASH - ASTM C618

GENERAL NOTES:
1)CONTRACTOR TO:
VERIFY ALL DIMENSIONS AND OPENING LOCATIONS
2)REBAR MAY BE TACK WELDED OR TIED
3)TOLERANCES PER ASTM C 478 STANDARD SPECIFICATIONS FOR REINFORCED CONCRETE MANHOLE SECTIONS

Oldcastle Precast®
2960 S. HIGHWAY 99 STOCKTON, CA 95215
PHONE: 209-466-4212 FAX: 209-466-2552

THIS DOCUMENT IS THE PROPERTY OF OLDCASTLE PRECAST, INC. IT IS SUBMITTED FOR REFERENCE PURPOSES ONLY AND SHALL NOT BE USED IN ANY WAY INJURIOUS TO THE INTERESTS OF SAID COMPANY.

COPYRIGHT © 2013 OLDCASTLE PRECAST, INC. ALL RIGHTS RESERVED.

10'Ø X 11'-0" (I.D.)WET WELL

INDIAN SPRINGS SW
STOCKTON, CA

CUSTOMER
ROMTEC

DATE	SALES	DRAWN	ENGINEER	CHECKED	SALES ORDER
3/10/14	BD	VK	JM	JM	S18973

DRAWING NUMBER	REVISION	SHEET
030-S18973-089 - 3-10-14	1 REV DATE 09/17/13	1 OF 1

	Revision Description	BY	DATE
–	–	–	–

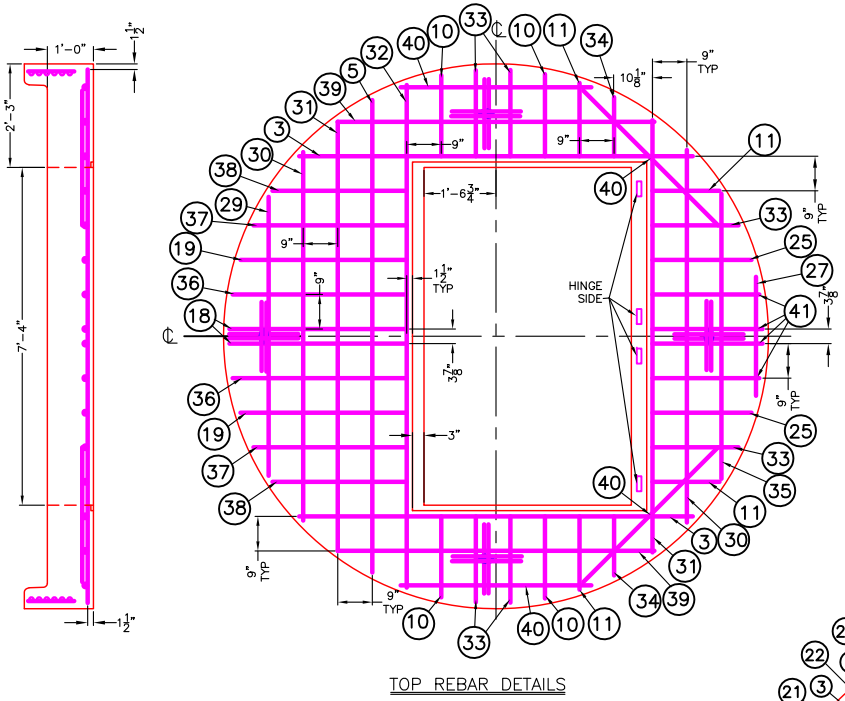

TOP REBAR DETAILS

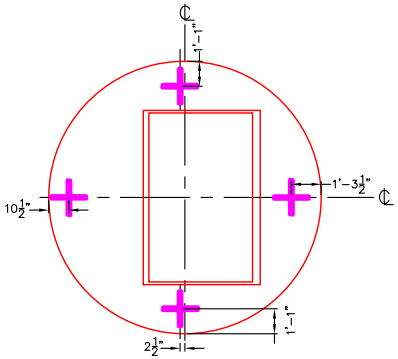

ANCHOR POSITION

4 LIFTING INSERTS SEE NOTE EACH INSERT WITH 4 #4 REBAR LENGTH 18" FOR ANCHORING TO CONCRETE

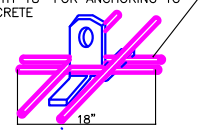

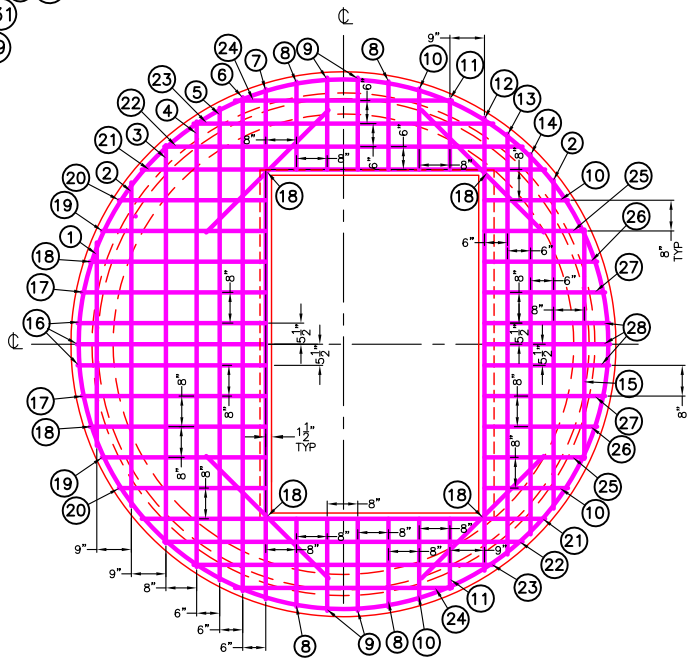

BOTTOM REBAR DETAILS

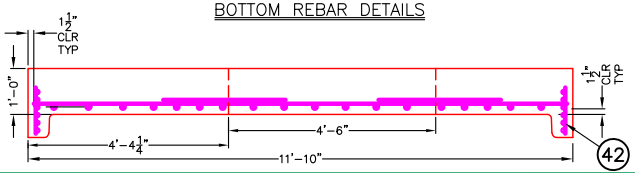

ASTM GRADE 60 STEEL REBAR

	ITEM NO.	BAR SIZE	BAR LENGTH	QTY.	TOTAL LENGTH	TOTAL WEIGHT
	1	#5	4'–5"	1	4'–5"	4.6#
	2	#5	7'–0"	2	14'–0"	14.6#
TOP 2 & BOTTOM 1	3	#5	8'–7"	3	25'–9"	26.9#
	4	#5	9'–8"	1	9'–8"	10.1#
TOP 1 & BOTTOM 1	5	#5	10'–3"	2	20'–6"	21.4#
	6	#5	10'–8"	1	10'–8"	11.1#
	7	#5	11'–1"	1	11'–1"	11.6#
	8	#5	1'–11"	4	7'–8"	8.0#
	9	#5	2'–0"	4	8'–0"	8.3#
TOP 4 & BOTTOM 4	10	#5	1'–9"	8	14'–0"	14.6#
TOP 4 & BOTTOM 2	11	#5	1'–6"	6	9'–0"	9.4#
	12	#5	9'–10"	1	9'–10"	10.3#
	13	#5	9'–1"	1	9'–1"	9.5#
	14	#5	8'–3"	1	8'–3"	8.6#
	15	#5	4'–11"	1	4'–11"	5.1#
	16	#5	4'–1"	3	12'–3"	12.8#
	17	#5	4'–0"	2	8'–0"	8.3#
TOP 2 & BOTTOM 6	18	#5	3'–10"	8	30'–8"	32.0#
TOP 2 & BOTTOM 2	19	#5	3'–6"	4	14'–0"	14.6#
	20	#5	3'–2"	2	6'–4"	6.6#
	21	#5	8'–9"	2	17'–6"	18.3#
	22	#5	7'–9"	2	15'–6"	16.2#
	23	#5	6'–6"	2	13'–0"	13.6#
	24	#5	4'–8"	2	9'–4"	9.7#
TOP 2 & BOTTOM 2	25	#5	2'–2"	4	8'–8"	9.0#
	26	#5	2'–5"	2	4'–10"	5.0#
TOP 1 & BOTTOM 2	27	#5	2'–7"	3	7'–9"	8.1#
	28	#5	2'–8"	3	8'–0"	8.3#
TOP ONLY	29	#5	6'–0"	1	6'–0"	6.3#
	30	#5	8'–0"	2	16'–0"	16.7#
	31	#5	9'–4"	2	18'–8"	19.5#
	32	#5	10'–11"	1	10'–11"	11.4#
	33	#5	1'–10"	6	11'–0"	11.5#
	34	#5	1'–3"	2	2'–6"	2.6#
	35	#5	6'–2"	1	6'–2"	6.4#
	36	#5	3'–9"	2	7'–6"	7.8#
	37	#5	3'–4"	2	6'–8"	7.0#
	38	#5	2'–11"	2	5'–10"	6.1#
	39	#5	6'–10"	2	13'–8"	14.3#
	40	#5	4'–1"	4	16'–4"	17.0#
	41	#5	2'–4"	4	9'–4"	9.7#
	TOTAL			107	453'–3"	472.7#
	42	MESH 2x8–d5xw2,5 12" HIGH 37'–2" LONG, CIRCLE D=11'–6"				

NOTE: CONAC LIFTING ANCHOR FFA08063 8 TON LOAD CAPACITY WITH REBARS REINFORCEMENT.

CONCRETE QUANTITY = 3.04 C.Y. HATCH W = 1000#

Oldcastle PRECAST
CALIFORNIA CONCRETE PIPE
2960 S. HIGHWAY 99 STOCKTON, CA. 95215 (209) 466–4212 FAX: (209) 466–2552

120" DIA. REINFOCED MH FLAT TOP FOR ROMTEC UTILITIES "HATCH ASGD–54X88(53X88)". 300#/S.F. LOAD ONLY CONFORMS TO: ASTM C478. DWG. NO: 54788

THIS DOCUMENT IS THE PROPERTY OF CALIFORNIA CONCRETE PIPE. IT IS SUBMITTED FOR REFERENCE PURPOSES ONLY AND SHALL NOT BE USED IN ANY WAY INJURIOUS TO THE INTERESTS OF SAID COMPANY.

DRAWN	DATE	WT. 14600#	DRAWING NO.
QLG	7/31/09		
REVISED —	—	REVISION NO. —	09–ROM–120FT–PD–DX
		SCALE	SHEET 1 OF 1

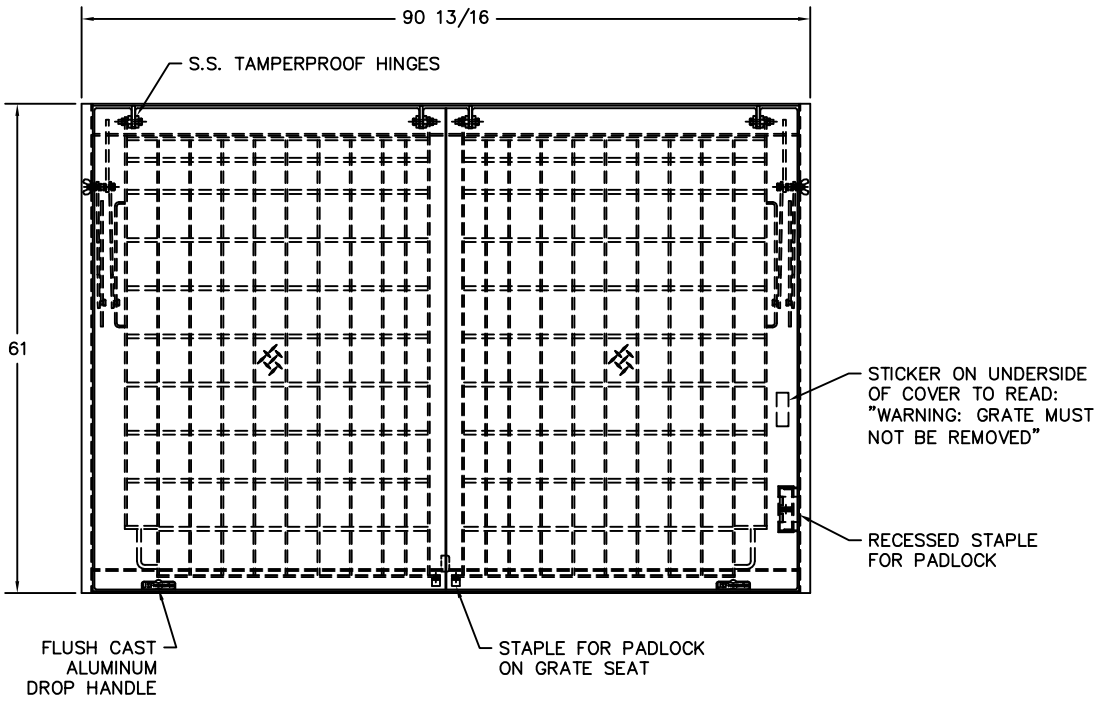

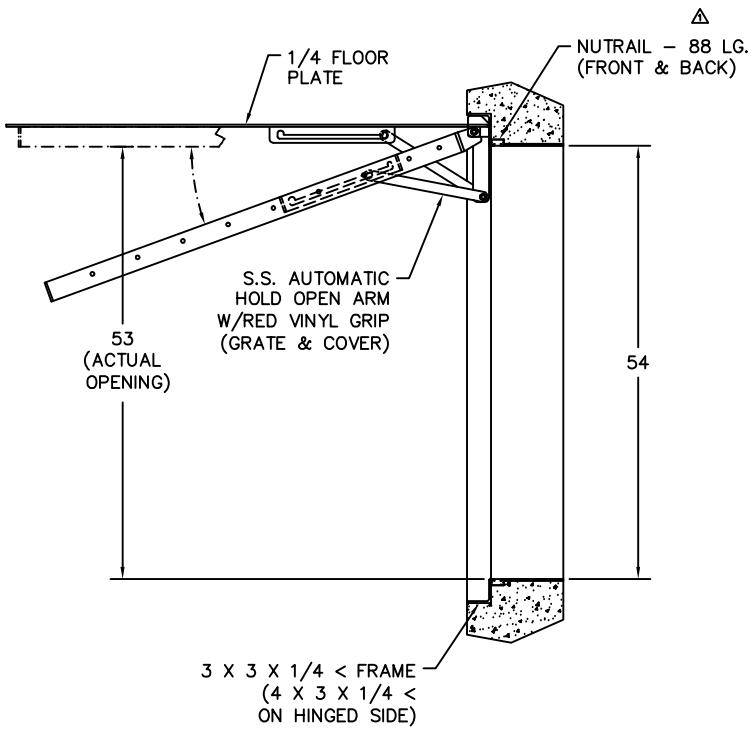

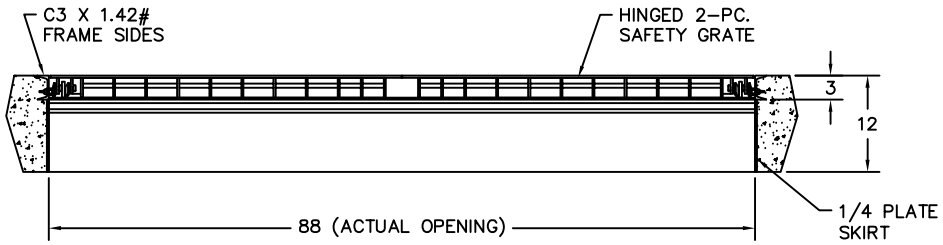

NOTES:
1– MATERIAL: ALUMINUM
2– LOADING: 300 LBS. PER SQ. FT.
3– 316 STAINLESS STEEL NUTS & BOLTS
4– AREA OF FRAME IN CONTACT WITH CONCRETE TO BE PAINTED WITH BITUMINOUS COATING
5– SAFETY GRATE TO BE PAINTED WITH SAFETY ORANGE POWDER COAT

REV.	DATE	BY	CHK.	DESCRIPTION
⚠	6/29/11	DAV		88 LG. NUTRAIL WAS 16 LG. (BACK SIDE)

ROMTEC 10 FT. DIA. WET WELL

PUBLICATION AND DISTRIBUTION IN WHOLE OR IN PART IS EXPRESSLY PROHIBITED WITHOUT PRIOR WRITTEN CONSENT

COPYRIGHT © 2011
ALL RIGHTS RESERVED
THIS DRAWING IS THE SOLE PROPERTY OF

U.S.F. FABRICATION INC.
HIALEAH, FLORIDA

HATCH ASGD 54 X 88 ALUMINUM
(53 X 88 ACTUAL OPENING)
HINGED ON THE SAME SIDE WITH RECESSED PADLOCK, NUTRAIL, SKIRT & BITUMINOUS PAINT

DWN. BY:	SCALE:	QUOTE#	DATE:
DAV	1=12		9/10/08
CHK. BY:	DWG. NO:	SHEET	REV:
	54788	1 OF 1	⚠

3.02.4 WET WELL DATA SHEETS

PAGE IS INTENTIONALLY LEFT BLANK

ConSeal™ Concrete Sealants INC.

CS-202

Butyl Rubber Sealant

APPLICATIONS

For self-sealing joints in: Manholes, Concrete Vaults, Septic Tanks, Concrete Pipe, Box Culverts, Utility Vaults, Burial Vaults, and Vertical Panel Structures.

SEALING PROPERTIES

- Provides permanently flexible watertight joints.
- Low to high temperature workability: 0°F to 120°F (-12°C to 48°C)
- Rugged service temperature: -30°F to +200°F (-34°C to +93°C)
- Excellent chemical and mechanical adhesion to clean, dry surfaces.
- Sealed Joints will not shrink, harden or oxide upon aging.
- No priming normally necessary. When confronted with difficult installation conditions, such as wet concrete or temperatures below 40°F (4°C), priming the concrete will improve the bonding action. Consult Concrete Sealants for the proper primer to meet your application.

HYDROSTATIC STRENGTH

ConSeal CS-202 meets the hydrostatic performance requirement as set forth In ASTM C-990 section 10.1 (Performance requirement: 10psi for 10 minutes in straight alignment – in plant, quality control test for joint materials.)

SPECIFICATIONS

ConSeal CS-202 meets or exceeds the requirements of Federal Specification SS-S-210 (210-A), AASHTO M-198B, and ASTM C-990-91.

P.O. Box 176, New Carlisle OH, 45344 • 937.845.8776 or 800.332.7325
FAX 937-845-3587 • www.conseal.com

ConSeal™ Concrete Sealants INC.

CS-202

Butyl Rubber Sealant

PHYSICAL PROPERTIES

	Spec	Required*	CS-202
Hydrocarbon blend content % by weight	ASTM D4 (mod.)	50% min.	52%
Inert mineral filler % by weight	AASHTO T111	30% min.	35%
Volatile Matter % by weight	ASTM D6	2% max.	1.2
Specific Gravity, 77°F	ASTM D71	1.15-1.50	1.20
Ductility, 77°F	ASTM D113	5.0 min.	12
Penetration, cone 77°F, 150 gm. 5 sec.	ASTM D217	50-100	60-65
Penetration, cone 32°F, 150 gm. 5 sec.	ASTM D217	40 mm	50-55
Flash Point, C.O.C., °F	ASTM D92	350°F min.	425°F
Fire point, C.O.C., °F	ASTM D92	375°F min.	450°F

IMMERSION TESTING

- 30-Day Immersion Testing: No visible deterioration when tested in 5% Caustic Potash, 5% Hydrochloric Acid, 5% Sulfuric Acid, and 5% saturated Hydrogen Sulfide. *

- One Year Immersion Testing: No visible deterioration when tested in 5% Formaldehyde, 5% Formic Acid, 5% Sulfuric Acid, 5% Hydrochloric Acid, 5% Sodium Hydroxide, 5% Hydrogen Sulfide and 5% Potassium Hydroxide.

* Requirements of ASTM C-990 Standard Specification for Joints for Concrete Pipe, Manholes, and Precast Box Sections Using Preformed Flexible Joint Sealants.

LIMITED WARRANTY
This information is presented in good faith, but we cannot anticipate all conditions under which this information and our products, or the products of other manufacturers in combination with our products, may be used. We accept no responsibility for results obtained by the application of this information or the safety and suitability of our products, either alone or in combination with other products. Users are advised to make their own tests to determine the safety and suitability of each such product or product combinations for their own purposes. It is the user's responsibility to satisfy himself as to the suitability and completeness of such information for this own particular use. We sell this product without warranty, and buyers and users assume all responsibility and liability for loss or damage arising from the handling and use of this product, whether used alone or in combination with other products.

P.O. Box 176, New Carlisle OH, 45344 • 937.845.8776 or 800.332.7325
FAX 937-845-3587 • www.conseal.com

ROMTEC UTILITIES RECOMMENTATION FOR USE AS JOINT TAPE

TAPECOAT® M860 PAVEMENT REPAIR COATING

Protection for Concrete and Asphalt Surfaces

Tapecoat M860 provides quick and easy repair of cracks in concrete and asphalt surfaces. This cold-applied, self-adhering tape is effective as a temporary patching material and also offers excellent bonding for repair of the substrate prior to a complete asphalt overlay. Tapecoat M860 solves maintenance problems in paving material on city streets, highways, and parking structures. This puncture-resistant coating can also protect transducer and sensor wiring from tire damage, prevent pavement deterioration due to deformation in heavy-traffic areas, and provide quick temporary repair to paved surfaces on bridges and airport runways and tarmacs. Tapecoat M860 retains its ability to bond under pressure at temperatures as low as 0˚F, making this coating ideal for temporary repairs during the cold winter months.

Tapecoat® M860 Pavement Repair Coating

- *Excellent bond to concrete and asphalt surfaces*
- *Applies easily in long lengths or short pieces*
- *Cold-applied tape with quick release liner*
- *Impermeable to water and salt*
- *Puncture-resistant*
- *Prefabricated to provide uniform thickness*
- *Environment-friendly*

Features/Specifications/Application

Tapecoat® M860

A pre-formed, cold-applied, self-adhering material that is impermeable to water and salt.

Composition

Tapecoat M860 is a pre-formed, cold-applied coating. The adhesive is manufactured from specially formulated elastomer and resins bonded to a woven highly puncture-resistant polymer.

Technical Data

Color:	Black
Shelf life:	Rotate stock yearly
Low temp flex:	Excellent
Bacteria resistance:	Excellent
Thickness:	.060" Nominal
Water Vapor Transmission Rate, Permeance:	0.01 perms(grams/sq.ft.hr./in. Hg) Maximum
Tensile Strength:	50 lb.in. Minimum
Puncture Resistance: (Mesh)	200 lb. Minimum
Pliability-1/4" Mandrel 180˚ bend -30˚F:	No cracks in mesh or adhesive

Surface Preparation

Tapecoat M860 should be applied over dry pavement that is free of dirt, debris or other foreign matter. Pavement cracks wider than 3/8" should be pre-filled with hot or cold crack material prior to applying Tapecoat M860 to assure longer protection of the crack filling material against surface wear.

Option

If the application is taking place in extreme cold (below 32˚F/0˚C) a liquid primer will enhance the immediate bond. TC Omniprime is the compatible primer for use with this product.

TAPECOAT
PO Box 631, Evanston, IL 60204-0631 • 1527 Lyons St. Evanston, IL 60201-3551 USA
800/758-6041 847/866-8500 Fax: 800/332-8273 Fax: 847/866-8596 www.tapecoat.com

KOR-N-SEAL® I & II

FLEXIBLE PIPE-TO-MANHOLE CONNECTORS

SPECIFICATION SHEET

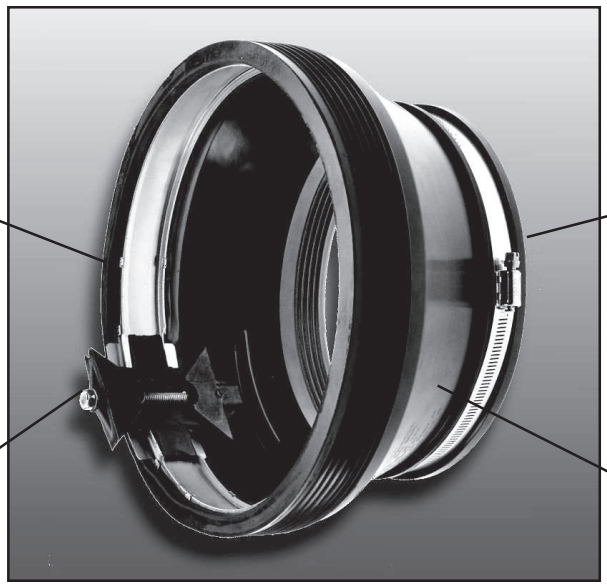

KOR-N-SEAL I - WEDGE KORBAND CONNECTOR ASSEMBLY

Install Kor-N-Seal I - Wedge Korband with Socket Wrench & Torque Limiter

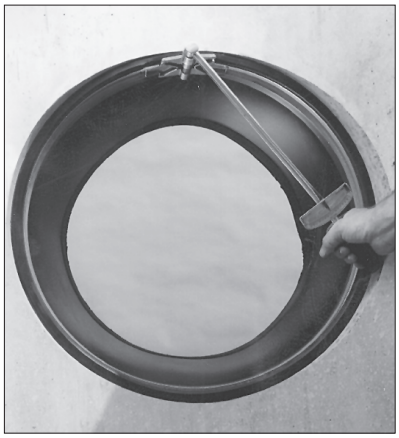

Install Kor-N-Seal II - Wedge Korband with Standard Torque Wrench

Install Pipe Clamp(s) with T-Handle Torque Wrench

www.npc.com
250 Elm Street • P.O. Box 301
Milford, NH 03055, U.S.A.
Tel: 603-673-8680 • 800-626-2180 • Fax: 603-673-7271

02/06

KOR-N-SEAL® I & II

Flexible Pipe-to-Manhole Connectors

SPECIFICATION SHEET

PERFORMANCE

Test	ASTM Method	Test Requirements	Kor-N-Seal® I & II
Head Pressure	C923 - 7.1	0° - 13 psi (30 ft) for 10 min. 7° - 10 psi (23 ft) for 10 min.	+13 psi for 10 min. +10 psi for 10 min.
Deflection Test	C923 - 7.2.2	7° in any direction	Over 7° in any direction
Load Test	C923 - 7.2.3	150 lbs/in. pipe dia.	Over 150 lbs/in. pipe dia.

Performed on all standard sizes of Kor-N-Seal Connectors.

RESILIENT EPDM OR POLYISOPRENE RUBBER

Conforms to ASTM C923

Test	ASTM Method	Test Requirements	TEST RESULTS Kor-N-Seal® I & II
Chemical Resistance	D543, at 22°C for 48 h		
1 *N* Sulfuric Acid		No weight loss	No weight loss
1 *N* Hydrochloric Acid		No weight loss	No weight loss
Tensile Strength	D412	1200 psi	1580 psi
Elongation at Break		350% min.	500%
Hardness	D2240 (shore A durometer)	± 5 from the manufacturer's specified hardness	48 ± 5
Accelerated Oven-Aging	D573 70 ± 1°C for 7 days	Decrease of 15%, max. of original tensile strength, decrease of 20% max. of elongation	10.1% tensile decrease 14.0% elongation decrease
Compression Set	D395, method B, at 70°C for 22 h	Decrease of 25%, max. of original deflection	13% decrease
Water Absorption	D471, immerse 0.75 by 2-in. specimen in distilled water at 70°C for 48 h	Increase of 10%, max. of original by weight	.8% increase
Ozone Resistance	D1171	Rating 0	Rating 0
Low-temperature Brittle Point	D746	No fracture at -40°C	No fracture at -40°C
Tear Resistance	D624, method B	200 lbf/in.	No tear at 210 lbf/in.

INTERNAL KORBAND

Conforms to ASTM C923, ASTM A666, and A240

– Korband Assembly is manufactured of 300 series stainless steel.
– Toggle Expander is made of 300 series stainless steel.
– The 106/406 series Wedge Expander is made from reinforced nylon or 300 series stainless steel.
– The 206/306 series Wedge Expander is made from 300 series stainless steel.

EXTERNAL PIPE CLAMP

Conforms to ASTM C923, ASTM A666, and A240

External take-up clamps are manufactured of 300 series stainless steel.

www.npc.com
250 Elm Street • P.O. Box 301
Milford, NH 03055, U.S.A.
Tel: 603-673-8680 • 800-626-2180 • Fax: 603-673-7271

NPC Kor-N-Seal Pipe-to-Manhole Connector

Technical Specification

Scope:

This specification describes the function of the NPC Kor-N-Seal pipe-to-manhole connector, its principle of operation, and the component materials that constitute the Kor-N-Seal connector, and their physical properties.

Product Application:

NPC Kor-N-Seal connectors are designed and manufactured to meet or exceed the requirements of ASTM C-923 "Standard Specification for Resilient Connectors Between Reinforced Concrete Manhole Structures, Pipes and Laterals". This specification requires the connector to provide a watertight seal under the following conditions:

- 10 PSI (23 feet head) of groundwater pressure
- Minimum 7 Degrees of pipe articulation in any direction
- Radial loading test of 150 pounds per inch diameter of pipe

Principle of Operation:

The Kor-N-Seal connector creates a watertight seal between the pipe and manhole by first sealing to the inside of the cored or formed hole in the manhole and then sealing to the outside of the pipe. See illustration at right.

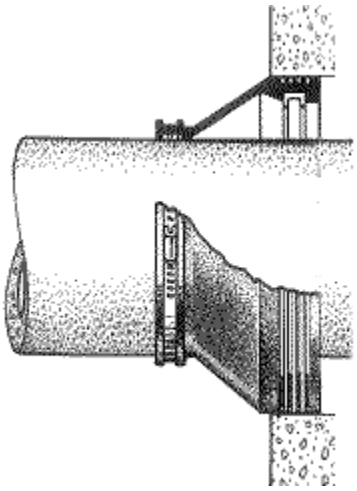

The seal at the inside of the manhole is created by the stainless steel Korband. The Korband is located inside of the end of the Kor-N-Seal connector that fits into the manhole. Once the Kor-N-Seal connector is located in the manhole, the diameter of the Korband is increased. This compresses the Kor-N-Seal connector against the inside wall of the hole in the manhole creating a watertight seal at the manhole.

The seal at the outside of the pipe is created by the stainless steel pipe clamp(s). The pipe clamp is located on the outside of the Kor-N-Seal connector. Once the pipe has been positioned in the connector the diameter of the pipe clamp is decreased. This compresses the Kor-N-Seal connector against the outside wall of the pipe creating a watertight seal at the pipe.

Reference the Kor-N-Seal Recommeded Installation Instructions for a detailed explanation of the preparation and installation of the Kor-N-Seal connector.

KOR-N-SEAL I – STAINLESS STEEL WEDGE

Recommended Installation Procedure

Refer to reverse side *Kor-N-Seal I - Wedge Korband Installation Chart* for Hole Size Range, Connector Dimensions, and Suggested Pipe O.D. Range.

CONNECTOR INSTALLATION:

1. Check to be sure Korband is properly located in Connector groove. (Fig. 1)
2. Insert Connector Assembly into hole with Wedge Expander at top of hole. (Fig. 2)
3. Position Connector so it is square to manhole both vertically and horizontally. (Fig. 3)
4. Tighten Wedge Expander using 1/2" [13 mm] socket with a preset torque limiter for each. For each size connector use torque limiter preset to proper torque. (Fig. 4) Retorquing is not required prior to shipment.

CAUTION: DO NOT USE IMPACT WRENCH.

IMPORTANT

RECOMMENDED TORQUE		TORQUE LIMITER
Connector Inches [mm]	Foot Pounds [Newton Meters]	P/N
10 – 24 [254 – 610]	12 [16]	91440-12

Fig. 4

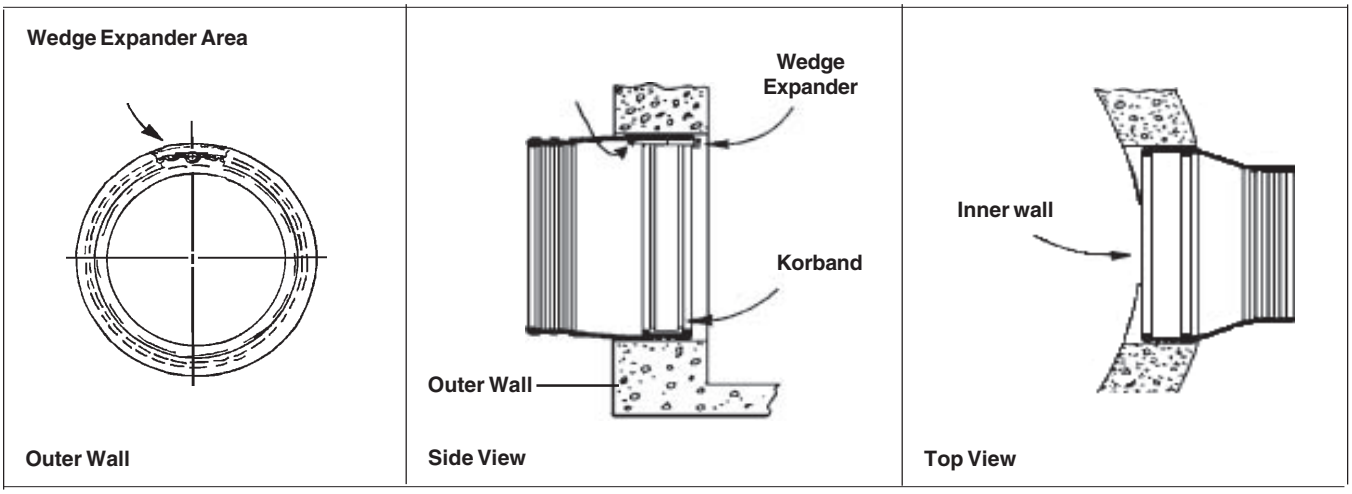

Fig. 1 **Fig. 2** **Fig. 3**

PIPE INSTALLATION:

1. Center pipe in Connector opening.
2. On maximum pipe O.D. installations, use a pipe lubricant on the outside barrel of the pipe and/or the inside ridges of the Connector (under the Pipe Clamp area) to allow the pipe to slide into place more easily.
3. Position the Pipe Clamp in the Connector's Pipe Clamp groove with the screw at the top.
4. Tighten the Pipe Clamp screw to 60 inch pounds [7 Newton Meters] with a T-handle Torque Wrench, P/N 80090.
5. On minimum pipe O.D. installations, lift the rubber up underneath the Pipe Clamp screw so that the Connector contacts the bottom surface of the pipe while the Pipe Clamp screw is being tightened. Application of pipe lubrication on the underside of the clamp will also help assure that an even contraction of rubber is maintained throughout the clamping area.
6. After the Pipe Clamp has been tightened down firmly, move the pipe horizontally and/or vertically to bring it to grade.

CAUTION: Pipe must **NOT** rest on Connector Korband.

CAUTION:
All capped stubs awaiting pipe installation at a later date must be restrained. Assure that a proper backfill material is used in adverse conditions. Prior to any critical usage, contact NPC Customer service at 1-800-626-2180.

www.npc.com
250 Elm Street • P.O. Box 301
Milford, NH 03055, U.S.A.
Tel: 603-673-8680 • 800-626-2180 • Fax: 603-673-7271

KOR-N-SEAL I – STAINLESS STEEL WEDGE

Recommended Installation Procedure

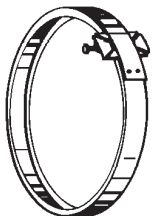

KORBAND
300 Series S.S., 16 Gauge

CONNECTOR
EPDM, Durometer 48

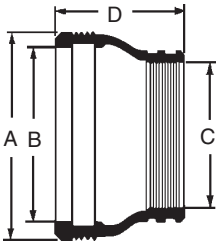

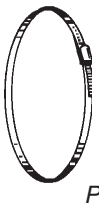

PIPE CLAMP
300 Series S.S., Quick Connect

Kor-N-Seal S106 Series

Connector P/N	Suggested Pipe O.D. Range Inches	Hole Size Range Inches	Connector Dimensions Inches			Pipe Clamp P/N
		A	B	C	D	
S106-12BWS	5.75 — 7.00	12.00 — 12.20	10.30	6.50	8	I-128
S106-12AWS	7.00 — 8.50	12.00 — 12.20	10.30	8.00	8	I-180
S106-12WS	8.25 — 9.75	12.00 — 12.20	10.30	9.25	8	I-180
S106-14AWS	9.50 — 11.25	14.00 — 14.20	12.25	10.50	8	I-190
S106-16BWS	9.50 — 11.25	15.95 — 16.15	14.30	10.50	8	I-190
S106-16AWS	11.25 — 13.00	15.95 — 16.15	14.30	12.25	8	I-218
S106-16WS	13.00 — 14.20	15.95 — 16.15	14.30	14.00	8	I-242
S106-20BWS	14.00 — 15.50	19.95 — 20.10	18.25	15.00	8	I-306
S106-20AWS	15.50 — 17.00	19.95 — 20.10	18.25	16.50	8	I-306
S106-20WS	17.00 — 18.15	19.95 — 20.10	18.25	18.00	8	I-306
S106-22WS	17.75 — 19.25	21.95 — 22.10	20.25	18.75	8	I-318
S106-24WS	19.60 — 21.10	23.95 — 24.10	22.25	20.60	8	I-348

Kor-N-Seal S406 Series

S406-10AWS	6.00 — 6.75	10.00 — 10.20	8.30	6.50	6	I-128
S406-10WS	7.50 — 8.20	10.00 — 10.20	8.30	8.50	6	I-180
S406-10.5AWS	6.00 — 6.75	10.50 — 10.70	8.80	6.50	6	I-128
S406-10.5WS	7.50 — 8.70	10.50 — 10.70	8.80	8.50	6	I-180
S406-11BWS	6.00 — 7.00	11.00 — 11.20	9.30	6.00	6	I-128
S406-11AWS	7.50 — 9.00	11.00 — 11.20	9.30	8.00	6	I-180
S406-12CWS	6.00 — 7.00	12.00 — 12.20	10.30	6.50	6	I-128
S406-12BWS	6.25 — 7.50	12.00 — 12.20	10.30	7.00	6	I-128
S406-12AWS	7.50 — 9.00	12.00 — 12.20	10.30	8.50	6	I-180
S406-12WS	9.00 — 10.20	12.00 — 12.20	10.30	10.00	6	I-180

Suggested pipe O.D. range comes from field experience. Refer to *Recommended Pipe Installation Procedure*.

www.npc.com
250 Elm Street • P.O. Box 301
Milford, NH 03055, U.S.A.
Tel: 603-673-8680 • 800-626-2180 • Fax: 603-673-7271

08/06

Kor-N-Seal® I Dimension Chart

CONNECTORS FOR SMALL DIAMETER PIPE

S106 Series — 8" Long Connectors

NOMINAL HOLE SIZE	MODEL NUMBER	PIPE O.D. RANGE	HOLE SIZE RANGE
7"	S106-7SWP	1.80 – 4.80	6.995 – 7.055
7"	S106-7WP	3.50 – 4.50	6.995 – 7.055
8"	S106-8ST	4.20 – 6.40	7.995 – 8.055
8"	S106-8T	4.10 – 5.90	7.995 – 8.055
8"	S106-8M	1.70 – 4.80	7.995 – 8.055
12"	S106-12BWP*	5.75 – 7.00	12.000 – 12.200
12"	S106-12AWP*	7.00 – 8.50	12.000 – 12.200
12"	S106-12WP*	8.25 – 9.75	12.000 – 12.200
12"	S106-12BT	5.75 – 7.00	12.040 – 12.130
12"	S106-12AT	7.00 – 8.50	12.040 – 12.130
12"	S106-12T	8.25 – 9.75	12.040 – 12.130
12"	S106-12BSL	5.75 – 7.00	12.000 – 12.250
12"	S106-12ASL	7.00 – 8.50	12.000 – 12.250
12"	S106-12SL	8.25 – 9.75	12.000 – 12.250
14"	S106-14AWP*	9.50 – 11.25	14.000 – 14.200
14"	S106-14AT	9.50 – 11.25	14.025 – 14.115
14"	S106-14ASL	9.50 – 11.25	14.500 – 14.250
16"	S106-16BWP*	9.50 – 11.25	15.950 – 16.150
16"	S106-16AWP*	11.25 – 13.00	15.950 – 16.150
16"	S106-16WP*	13.00 – 14.20	15.950 – 16.150
16"	S106-16BT	9.50 – 11.25	15.975 – 16.070
16"	S106-16AT	11.25 – 13.00	15.975 – 16.070
16"	S106-16T	13.00 – 14.50	15.975 – 16.070
16"	S106-16BSL	9.50 – 11.25	15.950 – 16.200
16"	S106-16ASL	11.25 – 13.00	15.950 – 16.200
16"	S106-16SL	13.00 – 14.20	15.950 – 16.200
20"	S106-20BWS	14.00 – 15.50	19.950 – 20.100
20"	S106-20AWS	15.50 – 17.00	19.950 – 20.100
20"	S106-20WS	17.00 – 18.15	19.950 – 20.100
22"	S106-22WS	17.75 – 19.25	21.950 – 22.100
24"	S106-24WS	19.60 – 21.10	23.950 – 24.100

* also available in Steel Wedge (WS)

www.npc.com
250 Elm Street • P.O. Box 301
Milford, NH 03055, U.S.A.
Tel: 603-673-8680 • 800-626-2180 • Fax: 603-673-7271

Kor-N-Seal® II
Dimension Chart

CONNECTORS FOR PIPE 15” OR GREATER

NOMINAL HOLE SIZE	MODEL NUMBER	PIPE O.D. RANGE			HOLE SIZE RANGE		
18”	S206-18L	15.000	–	15.625	17.98	–	18.13
22”	S206-22	17.625	–	19.000	21.98	–	22.13
22”	S206-22L	19.000	–	19.625	21.98	–	22.13
24”	S206-24A	18.000	–	19.500	23.98	–	24.13
24”	S206-24	19.625	–	21.000	23.98	–	24.13
24”	S206-24L	21.000	–	21.625	23.98	–	24.13
26”	S206-26	21.625	–	23.000	26.00	–	26.20
26”	S206-26L	23.000	–	23.625	26.00	–	26.20
28”	S206-28	23.625	–	25.000	28.00	–	28.20
28”	S206-28L	25.000	–	25.625	28.00	–	28.20
30”	S206-30	25.625	–	27.000	30.00	–	30.20
30”	S206-30L	27.000	–	27.625	30.00	–	30.20
32”	S206-32	27.625	–	29.000	32.00	–	32.20
32”	S206-32L	29.000	–	29.625	32.00	–	32.20
34”	S206-34	29.625	–	31.000	34.00	–	34.20
34”	S206-34L	31.000	–	31.625	34.00	–	34.20
36”	S206-36	31.625	–	33.000	36.00	–	36.20
36”	S206-36L	33.000	–	33.625	36.00	–	36.20
38”	S206-38	33.625	–	35.000	38.00	–	38.20
38”	S206-38L	35.000	–	35.625	38.00	–	38.20
40”	S206-40	35.625	–	37.000	40.00	–	40.20
40”	S206-40L	37.000	–	37.625	40.00	–	40.20
42”	S206-42	37.625	–	39.000	42.00	–	42.20
42”	S206-42L	39.000	–	39.625	42.00	–	42.20
44”	S206-44	39.625	–	41.000	44.00	–	44.20
44”	S206-44L	41.000	–	41.625	44.00	–	44.20
46”	S206-46	41.625	–	43.000	46.00	–	46.20
46”	S206-46L	43.000	–	43.625	46.00	–	46.20
48”	S206-48	43.625	–	45.000	48.00	–	48.20
48”	S206-48L	45.000	–	45.625	48.00	–	48.20
50”	S206-50	45.000	–	45.625	50.00	–	50.25
50”	S206-50L	45.625	–	47.000	50.00	–	50.25
52”	S206-52	47.000	–	47.625	52.00	–	52.25
52”	S206-52L	47.625	–	49.000	52.00	–	52.25
54”	S206-54	49.000	–	49.625	54.00	–	54.25
54”	S206-54L	49.625	–	51.000	54.00	–	54.25

LARGER SIZES AVAILABLE

www.npc.com
250 Elm Street • P.O. Box 301
Milford, NH 03055, U.S.A.
Tel: 603-673-8680 • 800-626-2180 • Fax: 603-673-7271

Hamilton Kent
make the connection

Tylox® SuperSeal™ Pre-Lubricated Gasket

Say *Goodbye* to the lube bucket and brush …… Say *Hello* to fast, clean, simple installation

Requiring no field lubrication, the Tylox® SuperSeal™ gasket* has a layer of silcone lubricant installed on the inner surface of the tube during the manufacturing process; saving you time, and money, on the job-site.

Self-contained Lubricant. Sealed within the tube, the lube is impervious to mud, dirt and debris. If you drop it in the trench, simply wipe the gasket surface clean and you're ready to install. No special handling or packaging is required.

Easier installation, without equalization, is made possible due to the reduced gasket stretch required by the unique lamell/rolling tube design. Quick and easy to install means you save even more time.

No gasket "roll" or "twist" during coupling is another benefit of the unique lamell/rolling tube design, which reduces the insertion force required. Manual coupling of up to 36" pipe is possible.

For Single Offset Joints ...

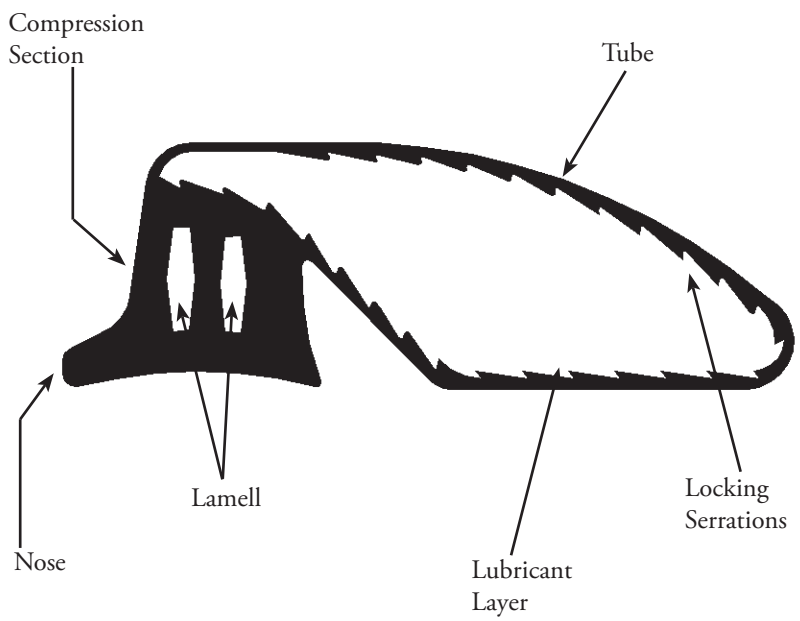

… in Round or Elliptical Pipe, Man-Holes and Boxes

Self-Centering of the Spigot within the Bell is carried out as the tube rolls into the annular space during the homing process.

Elimination of Joint Kick Back, is caused by the rearward locking action of the serrations as the tube rolls forward

Bell and Spigot protection under deflection is accomplished by the cushioning effect of the tube, as it rests within the annular space.

ASTM C361, ASTM C425, ASTM C443, AASHTO M198.4 and CSA A-257 material requirement compliance.

Pipe sizes to 144" can be accommodated.

INSTALLATION

Ensure Bell, Spigot and Gasket are free from loose debris or foreign material.

Stretch the gasket around the spigot, with the nose against the step, and the tube laying flat against the spigot. DO NOT LUBRICATE.

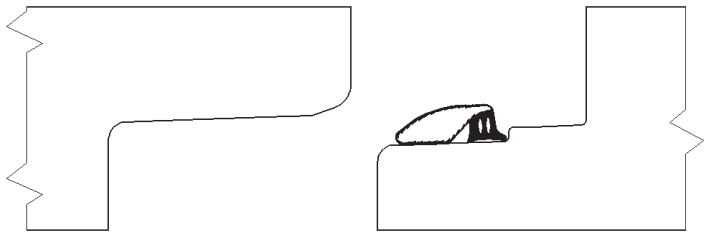

Align the spigot with the bell, and thrust the spigot home using suitable mechanical means. The homing process will cause the lubricated tube to "roll" over itself, above the compression section, allowing the pipe to slide forward.

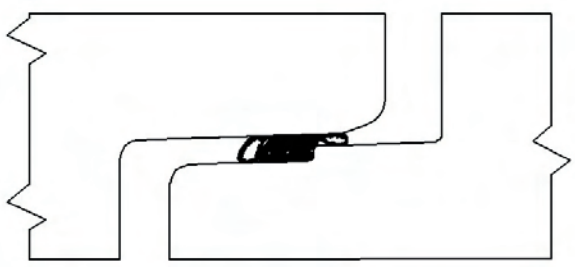

Once fully homed, the compression section seals the total annular space; the rolling tube comes to rest within the small annular space - acting as a cushion against side loads, and the serrations act to resist pipe pull-out.

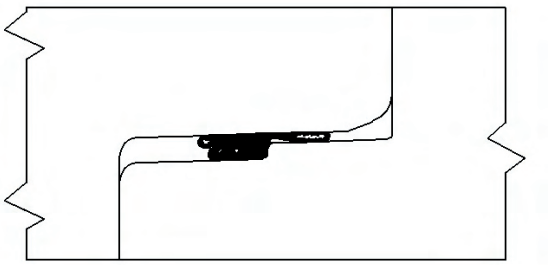

*Tylox SuperSeal Gaskets are patented under US Patent 4934716

MATERIALS

Tylox® SuperSeal™ gaskets* are available in the following materials:

- Isoprene

Optional Materials

- Nitrile (Oil Resistant)
- Isoprene / EPDM blend (Green Book & C425)
- Neoprene (Oil and Ozone Resistant)

Other materials may be available as special order.
Consult your Hamilton Kent agent for your specific requirements.

SPECIFICATIONS

Tylox® SuperSeal™ gaskets* are manufactured to meet the material requirements of the following specifications:

- ASTM C361, C425, & C443
- AASHTO M198.4
- CSA A257
- "Green Book"

Other specifications may be available as special order. Please consult your Hamilton Kent agent for your specific requirements.

CONTACT US

Hamilton Kent

77, Carlingview Drive
Toronto, Ontario, Canada.
M9W 5J6

Phone (800) 268-8479
Fax (888) 674-6960

Web-Site www.hamiltonkent.com
E-Mail sales@hamiltonkent.com

All Tylox® SuperSeal™ gaskets are warrantied for 12 months from date of purchase (Invoice Date) in accordance with the details as outlined in Hamilton Kent's Standard Terms and Conditions of Sale.

Lit_TSS_0601_ER4

NO LUBRICANT REQUIRED

TYLOX Super Seal

Hamilton Kent
make the connection

Pipe & Manhole Pre-lubricated Gasket Installation

Pipe

1

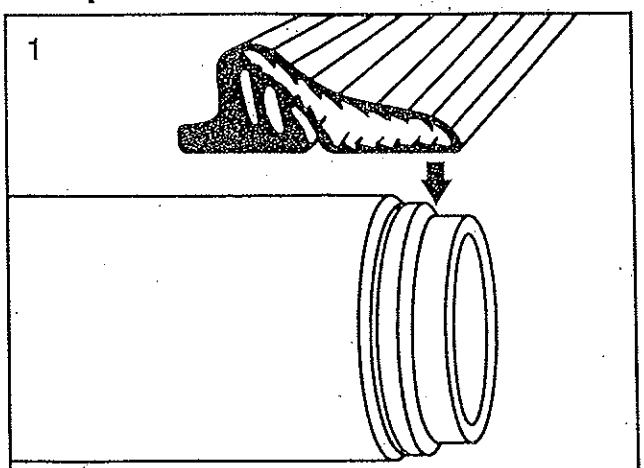

2

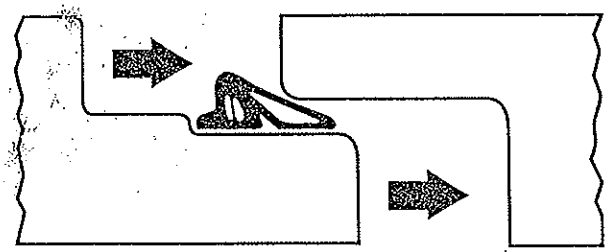

Gasket should be placed firmly against the offset all the way around the spigot of the pipe.

3

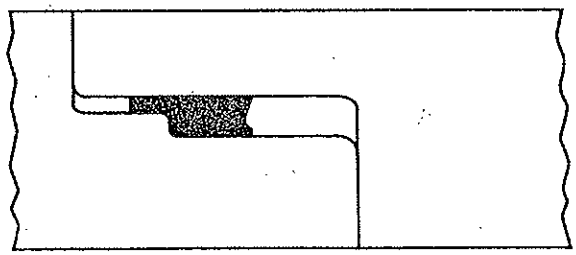

Manhole

1

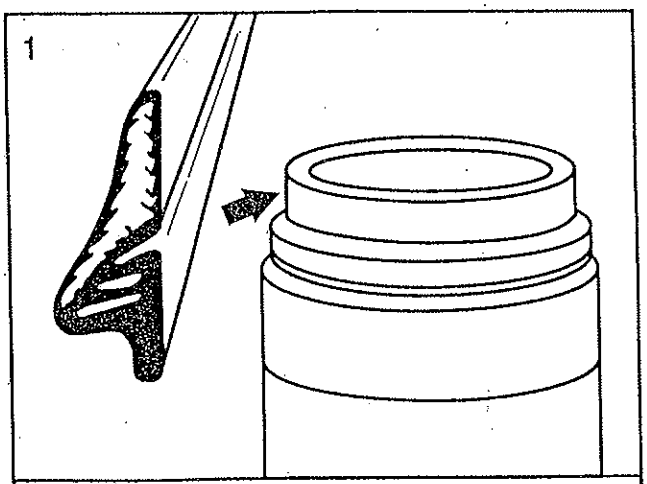

2

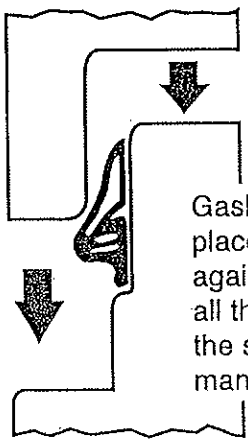

Gasket should be placed firmly against the offset all the way around the spigot of the manhole.

3

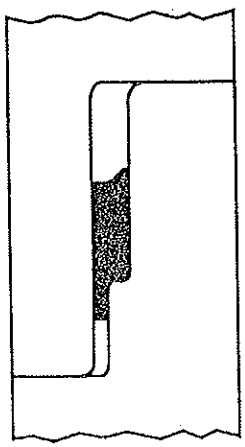

VAL-MATIC®

SURGEBUSTER!®

Air Release Air Valves

Air/Vacuum Air Valves

Combination Air Valves

Well Service Air Valves

Wastewater Air Valves

Surge-Suppression Air Valves

Vacuum Relief Air Valves

SURGEBUSTER® Check Valves

Tilted Disc® Check Valves

Swing-Flex® Check Valves

Dual Disc® Check Valves

Silent Check Valves

American-BFV® Butterfly Valves

Cam-Centric® Plug Valves

Sure Seal Foot Valves

Bulletin 7200

SURGEBUSTER!®
A member of the Swing-Flex® Family

BUILT WITH ADVANCED TECHNOLOGY TO WITHSTAND YOUR *TOUGHEST* APPLICATIONS

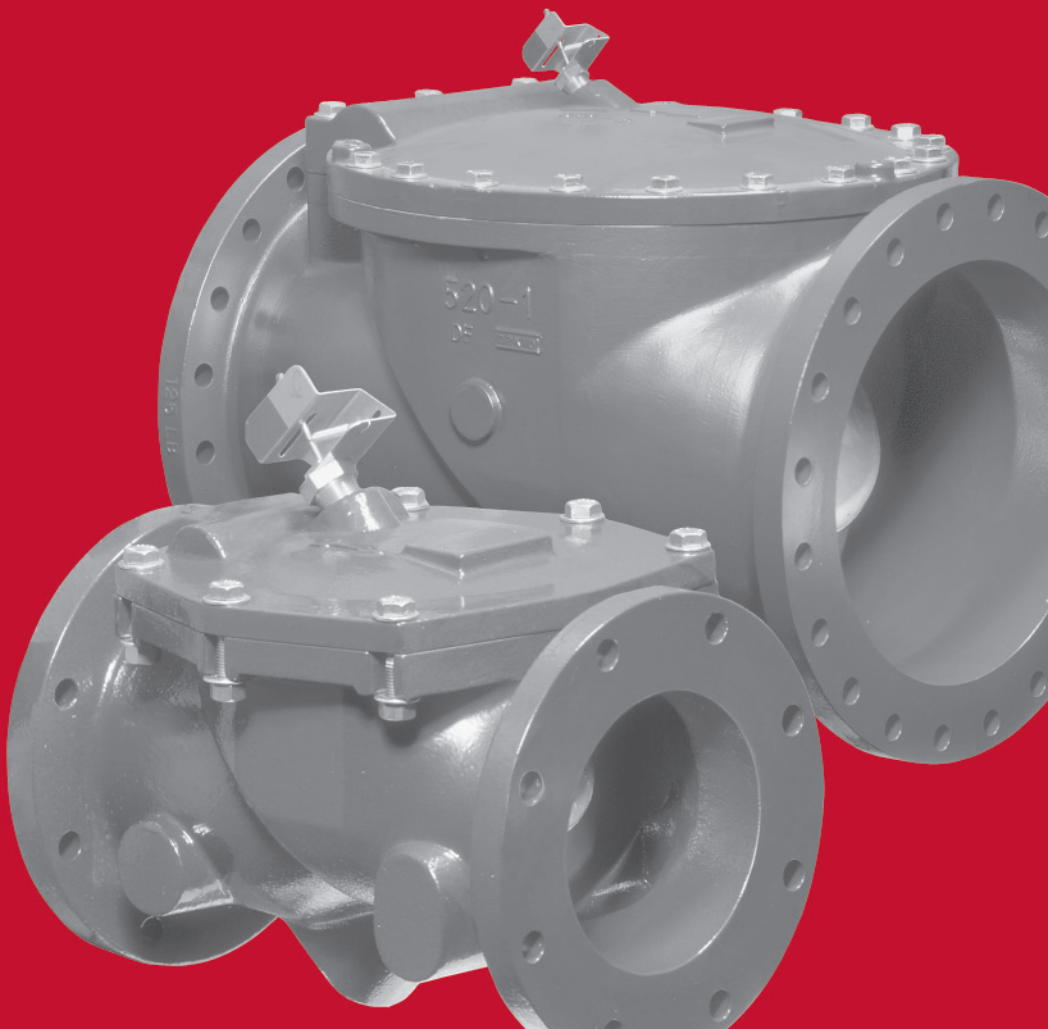

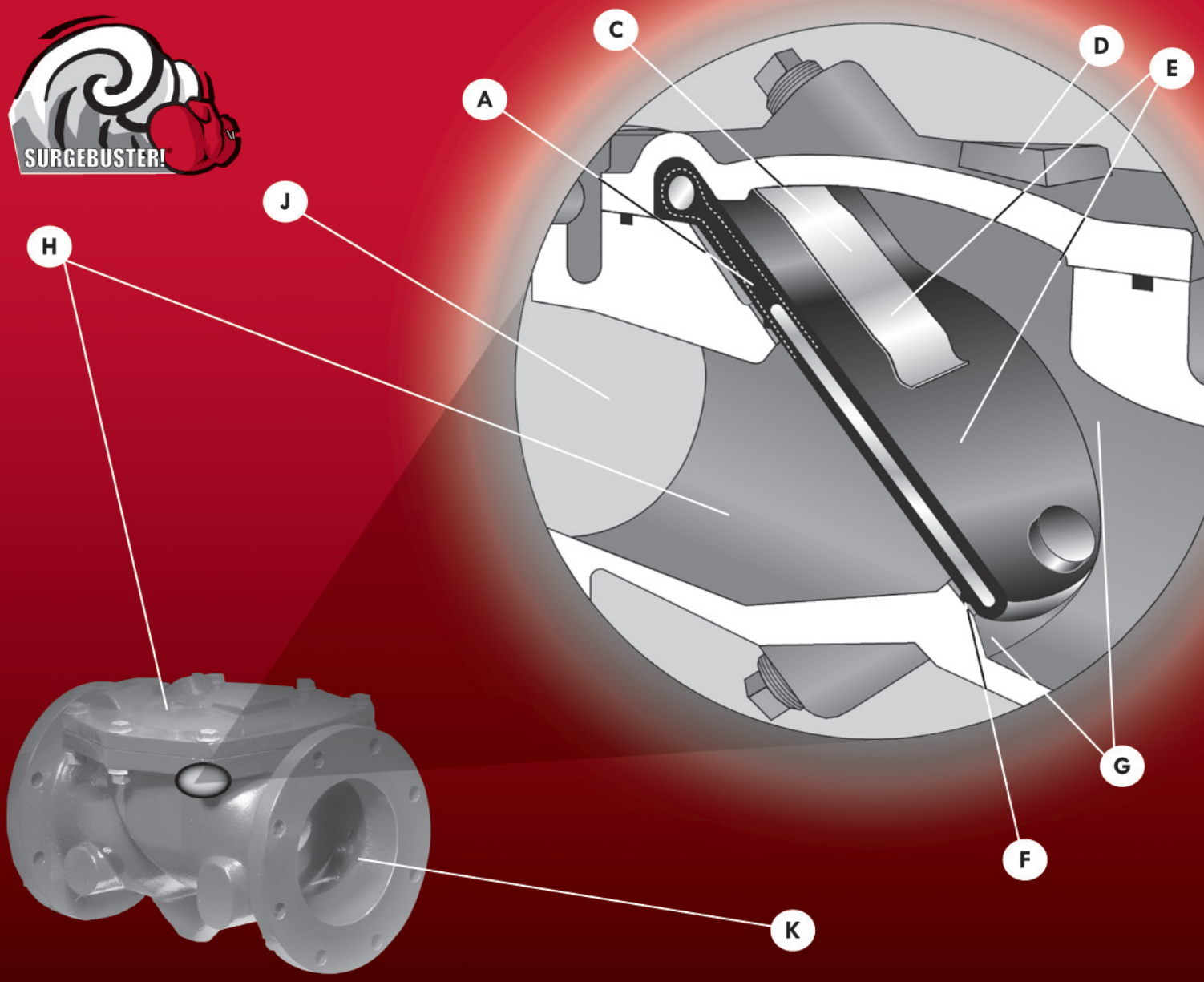

A. REINFORCED DISC
The one piece precision molded disc is steel and nylon reinforced to provide years of trouble free performance. It is backed by a 25 year warranty for the flex portion of the disc.

B. MECHANICAL DISC POSITION INDICATOR* (Optional)
Provides clear indication of the valves disc position. Can also be provided with a SCADA compatible limit switch for off site monitoring (Not shown, see options).

C. DISC ACCELERATOR™**
The signature SURGEBUSTER!® Disc Accelerator™ moves in perfect tandem with the reinforced disc to quickly and efficiently speed the closure of the disc.

D. DOMED ACCESS PORT
Full size top access port allows removal of disc without removing valve from line and provides for flushing action over the valve disc for clog free performance. Access cover includes a drilled and tapped port for installation of optional Disc Position Indicator.

E. ONLY TWO MOVING PARTS
The Memory-Flex™ Disc and Disc Accelerator™ are the only moving parts. There are no packing or O-rings, mechanical hinges, pivot pins or bearings to wear out. Hinge portion of disc is warranted for 25 years.

F. DROP TIGHT SEATING
The synthetic reinforced disc, with its integral O-ring type seal design, assures positive seating at high and low pressures.

G. NON-SLAM CLOSURE
"Short Disc Stroke" combined with Memory-Flex™ Disc action and the Disc Accelerator™ reduce potentially destructive water hammer.

H. FUSION BONDED EPOXY
Fusion Bonded Epoxy (FBE) is provided standard on the interior and exterior of the valve. The FBE is ANSI/NSF 61 certified. Other coatings are available on request.

I. BACKFLOW ACTUATOR (Optional)
Body is drilled and tapped for installation of optional backflow actuator (Not shown, see options).

J. NON-CLOG DESIGN
The unrestricted full flow area combined with smooth streamlined contouring allows passage of large solids minimizing the potential for clogging.

K. 100% FLOW AREA
For improved flow characteristics and lower head loss, the Val-Matic SURGEBUSTER!® Swing Check Valve provides 100% unrestricted flow area.

SURGEBUSTER® is a registered trademark of Val-Matic Valve & Mfg. Corp.
Copyright 2003 Val-Matic Valve & Mfg. Corp. ORP 4/09 1M
*US Patent 6,152,173 **US Patent 6,050,294

Pumping applications with high head, surge tanks, or multiple pumps, have long proved a challenge to system operators trying to minimize line surges resulting from slamming check valves.

Only one real cause exists for slamming check valves -- reverse flow. The impact of the reverse flow is direct and proportional, the faster the reverse flow, the more violent the slam. If reverse flow through the check valve is allowed to develop, the reverse flow will slam the disc into the seat and create a loud water hammer or surge.

Now system operators have the solution...the SURGEBUSTER®! The newest member of the Swing-Flex® family.

The SURGEBUSTER® is a swing check valve that fully meets ANSI/AWWA C508. But here is where the similarities to traditional swing check valves end.

The SURGEBUSTER® achieves rapid closure through a short disc stroke of 35° and adjustable Disc Accelerator™. The short disc stroke is less than half the typical 80° to 90° stroke of a conventional swing check valve. It is achieved by placing the valve seat on a 45° angle while maintaining a full flow area equal to the mating pipe (Figures 1 & 2.)
The Disc Accelerator™ is a precision formed stainless steel mechanism that closes the valve disc rapidly thus avoiding slamming by flow reversal and yet allowing the disc to be stabilized under flow conditions. The accelerator is fully enclosed within the valve and completely out of the flow path (Figures 1 & 2).

VAL-MATIC SURGEBUSTER® VALVE

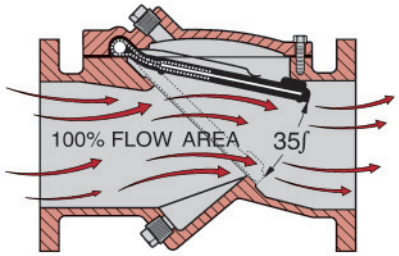

Figure 1

CONVENTIONAL SWING CHECK VALVE

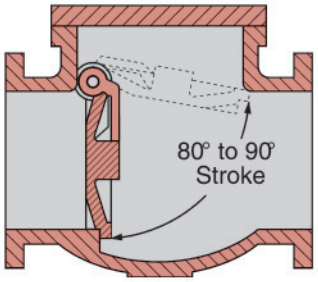

Figure 2

Traditional swing check valves use outside levers with weights or springs in an attempt to reduce slam. By doing so, they pull the disc down into the flow and reduce the length of the disc stroke so that it closes faster.

Unfortunately, while outside levers and weights help solve one problem, they create two others. Increased headloss and maintenance are inevitable with traditional swing check valves. Pulling the disc down into the flow creates a blockage in the line and causes tremendous headloss and turbulence. With the disc oscillating in the flow, the shaft, bearings, and shaft seal are all subjected to severe wear and reduced service life.

In many applications, even this approach has proven ineffective and led to the inclusion of an air cushion cylinder. The air cushion is attached to the weight or spring powered lever that is pulling the disc down. The traditional air cushion on the other hand is working in reverse by slowing the disc through its full stroke and allowing reverse flow to build. The end result, especially on fast flow reversal systems, is a slamming check valve and water hammer.

The SURGEBUSTER® with its short 35-degree stroke and Disc Accelerator™ provide fast closure thereby preventing slam and the resultant surge without obstructing flow or the need for maintenance.

Val-Matic is so confident in the SURGEBUSTER'S non-slam performance that we guarantee* the valve will outperform any air cushion swing check valve with weight and lever.

*Warranty details available upon request.

Optional Accessories

RUBBER LINING -- Unlike conventional swing check valves, the ***SURGEBUSTER®*** Check Valve is designed to accept synthetic or natural rubber lining. Body lining coupled with synthetic ***Memory-Flex™*** discs makes the ***SURGEBUSTER®*** ideally suited for systems containing abrasive or corrosive fluids.

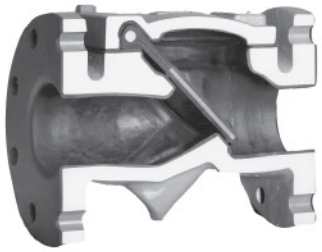

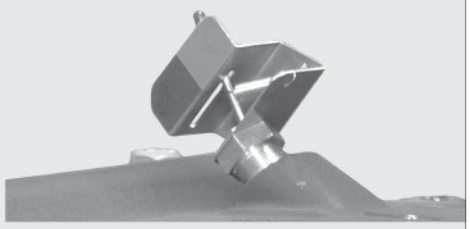

DISC POSITION INDICATOR -- The cover mounted disc position indicator provides clear indication of the valve's disc position. A SCADA compatible limit switch can also be provided. Both can be provided at the time of valve purchase or for field installation at a later date.

BACKFLOW ACTUATOR -- Available for use when manual backflow operation is required. Most commonly used for priming pumps, back flushing, draining lines, and system testing. The Val-Matic Backflow Actuator can be provided at the time of valve purchase or for field installation at a later date.

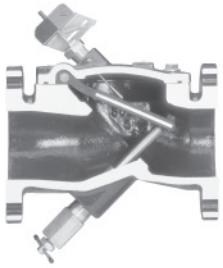

Head Loss Chart

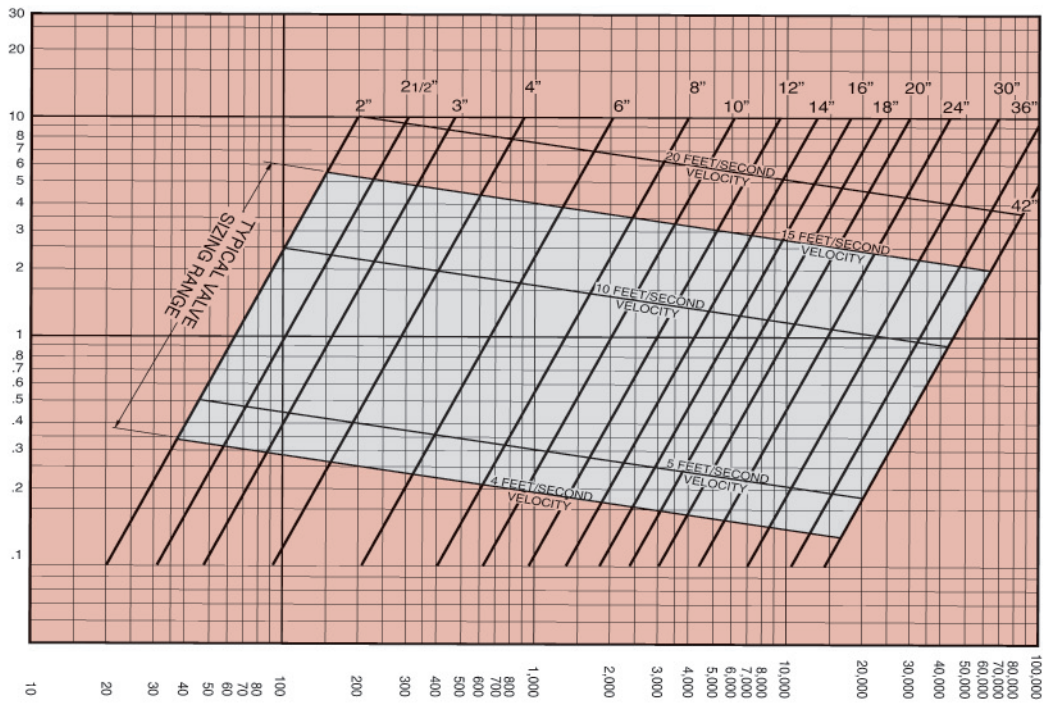

FLOW OF WATER IN GALLONS PER MINUTE

Consult factory for Digester Gas Service

Flow Tests performed by the Utah Water Research Laboratory of Utah State University.

Installation Dimensions and Construction

VALVE SIZE	MODEL NO.	A	E	F1	F2	H	J	K	L
2	7202	8.00	2.00	N/A	3.38	-0.50	6.75	1.50	1.50
2 1/2	7225	8.50	2.50	N/A	3.38	-0.50	7.00	1.50	1.50
3	7203	9.50	3.00	7.63	5.12	-0.38	7.50	1.50	1.50
4	7204	11.50	4.00	8.25	5.75	4.13	11.63	2.25	2.25
6	7206	15.00	6.00	9.38	6.88	2.00	12.00	2.25	2.25
8	7208	19.50	8.00	11.00	8.38	2.00	15.75	5.75	5.75
10	7210	24.50	10.00	13.38	10.75	0.50	17.00	5.75	5.75
12	7212	27.50	12.00	15.00	12.50	3.50	22.50	6.50	6.50
14	7214	31.00	14.00	17.63	13.00	4.00	26.25	6.50	6.50
16	7216	32.00	16.00	18.88	14.25	4.63	30.00	6.50	6.50
18	7218	36.00	18.00	20.00	15.25	5.25	33.75	6.50	6.50
20	7220	40.00	20.00	21.38	16.88	5.88	37.50	8.00	8.00
24	7224	48.00	24.00	23.88	19.25	7.00	45.00	8.00	8.00
30	7230	56.00	30.00	27.63	23.00	-0.63	41.25	8.00	8.00
36	7236	63.00	36.00	31.00	27.38	-6.12	43.50	8.00	8.00
42	7242	70.00	42.00	39.12	36.88	-11.00	48.12	8.00	8.00

Dimensions "L" and "K" represent the clearance required to remove backflow actuator.

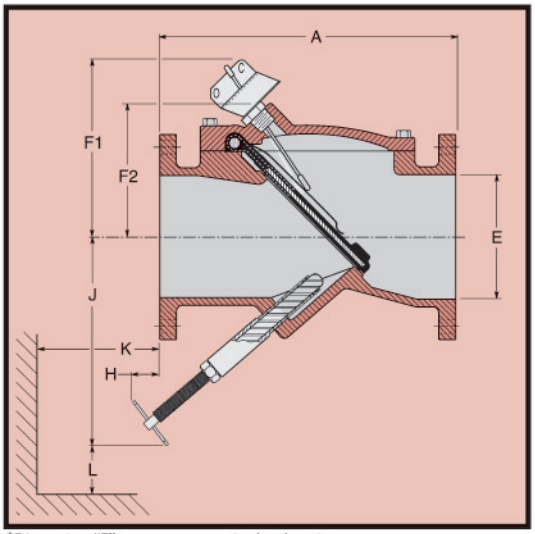

*Dimension "E" represents nominal valve size.
Note: Flanged ends conform to ANSI B16.1 Class 125.

MATERIALS OF CONSTRUCTION			
Component		Standard	Optional
Body and Cover		Ductile Iron ASTM A536 Grade 65-45-12	Stainless Steel, Bronze
Disc		Buna-N (NBR), ASTM D2000-BG	Viton (FKM), ASTM D2000-HK
Disc Accelerator		TYPE 302 Stainless Steel	N/A
Coatings	Interior	Fusion Bonded Epoxy*	Rubber Lining
	Exterior	Fusion Bonded Epoxy*	Consult Factory

Consult factory for additional material and coating options.
*ANSI/NSF 61 Certifications

ANSI MAXIMUM PRESSURE-TEMPERATURE RATING		
Maximum Non-Shock Working Pressure (P.S.I.) ANSI Class 125		
Temperature °F	2" - 24"	30" - 36"
100°	250	150
150°		
200°	235	135
Hydrostatic Test Pressures	375	230

For higher temperatures consult factory.

1.1 This specification is intended to cover the design, manufacture, and testing of 2 in. (50 mm) through 42 in. (1000 mm) Surgebuster® Swing Check Valves suitable for cold working pressures of 250 psig, 150 psig for 30 in. (800mm) and larger in water, wastewater, abrasive, and slurry service.

1.2 The check valve shall be of the full body type, with a domed access cover and only two moving parts, the flexible disc and the disc accelerator.

Standards and Approvals

2.1 The valves shall be designed, manufactured and tested in accordance with American Water Works Association Standards ANSI/AWWA C508.

2.2 Manufacturer shall have a quality management system that is certified to ISO 9001 by an accredited, certifying body.

Connections

3.1 Valves shall be provided with flanges in accordance with ANSI B16.1, Class 125.

Design

4.1 The valve body shall be full flow equal to nominal pipe diameter at all points through the valve. The 4 in. (350mm)valve shall be capable of passing a 3 in. (75mm) sphere. The seating surface shall be on a 45 degree angle to minimizedisc travel. A threaded port with pipe plug shall be provided on the bottom of the valve to allow for field installation of abackflow actuator, air cushion or hydraulic cushion without special tools or removing the valve from the line.

4.2 The top access port shall be full size, allowing removal of the disc without removing the valve from the line. The access cover shall be domed in shape to provide flushing action over the disc for operating in lines containing high solids content. A threaded port with pipe plug shall be provided in the access cover to allow for field installation of a mechanical, disc position indicator.

4.3 The disc shall be of one-piece construction, precision molded with an integral o-ring type sealing surface, and contain alloy steel and nylon reinforcement in the flexible hinge area. The flex portion of the disc shall be warranted for twenty-five years. Non-Slam closing characteristics shall be provided through a short 35 degree disc stroke and a disc accelerator to provide a cracking pressure of 0.3 psig.

4.4 The disc accelerator shall be of one piece construction and provide rapid closure of the valve in high head applications. The disc accelerator shall be enclosed within the valve and shall be field adjustable and replaceable without removal of the valve from the line. The disc accelerator shall be securely held in place by being captured between the cover and disc. It shall be formed with a large radius to allow smooth movement over the disc surface.

4.5 The valve disc shall be cycle tested 1,000,000 times in accordance with ANSI/AWWA C508 and show no signs of wear, cracking, or distortion to the valve disc or seat and shall remain drop tight at both high and low pressures. The test results shall be independently certified.

Materials

5.1 The valve body and cover shall be constructed of ASTM A536 Grade 65-45-12 ductile iron or ASTM A126 Class B for 30 in. and larger. Optional body materials include ASTM A-351 Grade CF8M, stainless steel (sizes 3" through 8").

5.2 The disc shall be precision molded Buna-N (NBR), ASTM D2000-BG. Optional disc material includes Viton.

5.3 The disc accelerator shall be type 302 stainless steel.

Options

6.1 A screw-type backflow actuator shall be provided (when specified) to allow opening of the valve during no-flow conditions. Buna-N seals shall be used to seal the stainless steel stem in a bronze bushing. The backflow device shall be of the rising-stem type to indicate position. A stainless steel T-handle shall be provided for ease of operation.

6.2 A mechanical indicator shall be provided (when specified) to provide disc position indication on valves 4" and larger. The indicator shall have continuous contact with the disc under all operating conditions to assure accurate disc position indication.

6.3 A pre-wired limit switch will be provided (when specified) to indicate open/closed position to a remote location. The mechanical type limit switch shall be activated by the external position indicator. The switch shall be rated for NEMA 4, 6, or 6P and shall have U.L. rated 5 amp, 12 or 250 VAC contacts.

6.4 A bottom mounted oil dashpot (oil cushion) shall be provided when specified to provide hydraulic control of the final 10% of valve closure and reduce valve slam and water hammer normally associated with rapid flow reversal conditions on pump shut down. The dashpot shall consist of a high pressure hydraulic cylinder, adjustable external flow control valve, oil reservoir, pressure gauge, staniness steel air inlet valve, and piping designed to control the closing speed of the last 10% of travel in 1-5 seconds. A threaded brass dashpot bushing unit with a grease fitting for lubrication shall connect the cylinder to the valve and shall have an air gap to prevent hydraulic fluid from entering the valve and contaminating the water system. A snubber rod fitted with O-ring seals and rod wiper scrapers shall make contact with the lower portion of the disc's stainless steel strike plate.

Manufacture

7.1 The manufacturer shall demonstrate a minimum of five (5) years experience in the manufacture of resilient, flexible disc check valves with air and hydraulic cushions.

7.2 All valves shall be hydrostatically tested and seat tested to demonstrate zero leakage. When requested the manufacturer shall provide test certificates, dimensional drawings, parts list drawings, and operation and maintenace manuals.

7.3 The exterior and interior of the valve shall be coated with an ANSI/NSF 61 approved fusion bonded epoxy coating.

7.4 Surgebuster® Swing Check Valves shall be Series #7200 as manufactured by Val-Matic® Valve & Manufacturing Corporation, Elmhurst, IL. USA or approved equal.

Dynamic Testing of Check Valves

DYNAMIC TESTING OF CHECK VALVES

SURGEBUSTER® and Air Cushioned Swing Check Valves were flow tested under identical dynamic conditions and the downstream pressure plotted as shown in Figures 1 and 2. The valves were installed on the discharge of a four-inch 20 HP water pump and connected to a hydro-pneumatic tank charged to 30 psig. After pump shutdown, the water flow would rapidly reverse in about 1/2 second and cause rapid valve closure.

The Air Cushioned Swing Check Valve was equipped with a lever, weight, and air cushion with flow control valve. Despite an operating velocity over 8 feet per second, the Cushioned Swing Check Valve traveled only 15 degrees or about 25% open. Partially open check valves are common and can cause excessive headloss and energy consumption. Adjustments to the air cushion revealed that any control setting of the cushion, slowed down the valve closure, and magnified the valve slam. In Figure 1, the valve closed with a loud slam and produced an upsurge in the downstream piping of 150 psi over the static pressure.

The SURGEBUSTER® was operated under the same flow conditions and was found to open 35 degrees or 100% open. In Figure 2, after pump shutdown the SURGEBUSTER® closed with a negligible slam and produced an upsurge in the downstream piping of only 25 psi over the static pressure.

The dynamic tests demonstrate that the SURGEBUSTER® can reduce check valve slam up to 80% when compared to conventional swing check valves. Numerous field installations with vertical lines, multiple pumps, and high pump discharge head all demonstrated the same result. The SURGEBUSTER® provides non-slam operation with reduced headloss and maintenance.

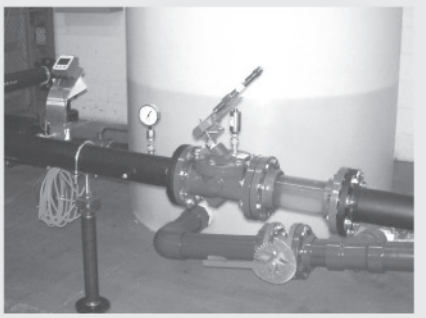

Figure 1

The air cushioned swing check valve closed with a loud slam producing a 150 psi surge with optimum cushion adjustment.

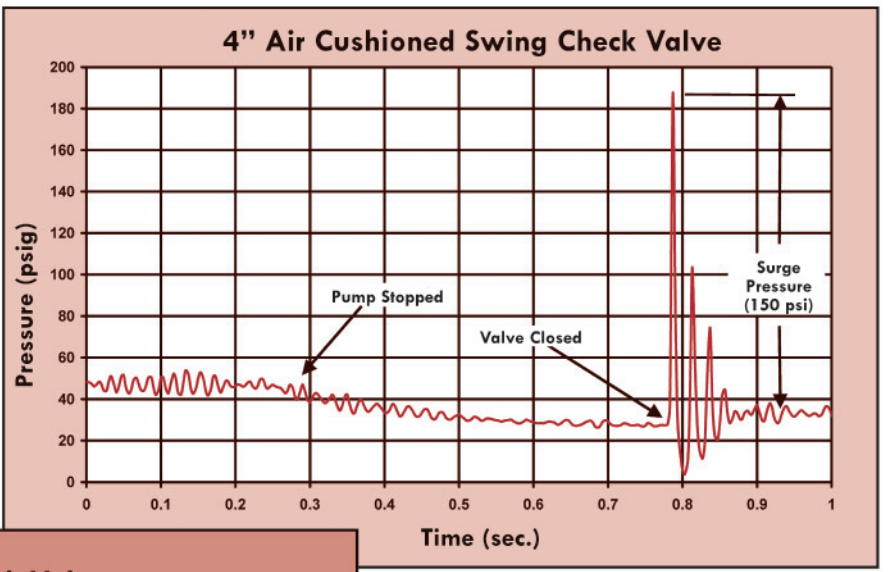

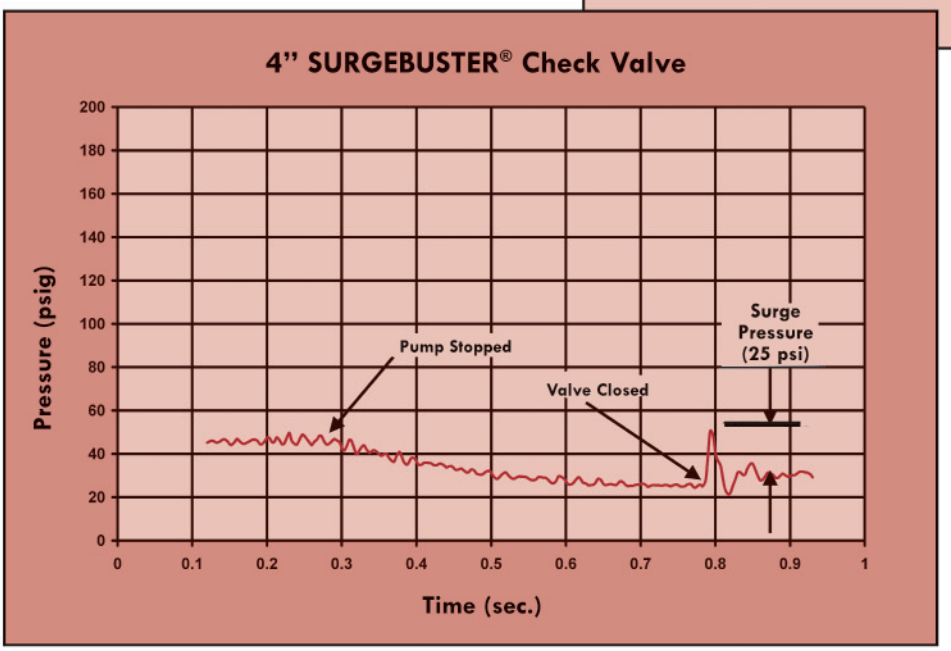

Figure 2

The SURGEBUSTER® closed quietly producing only a 25 psi surge pressure, 80% less than the conventional air cushioned swing check valve.

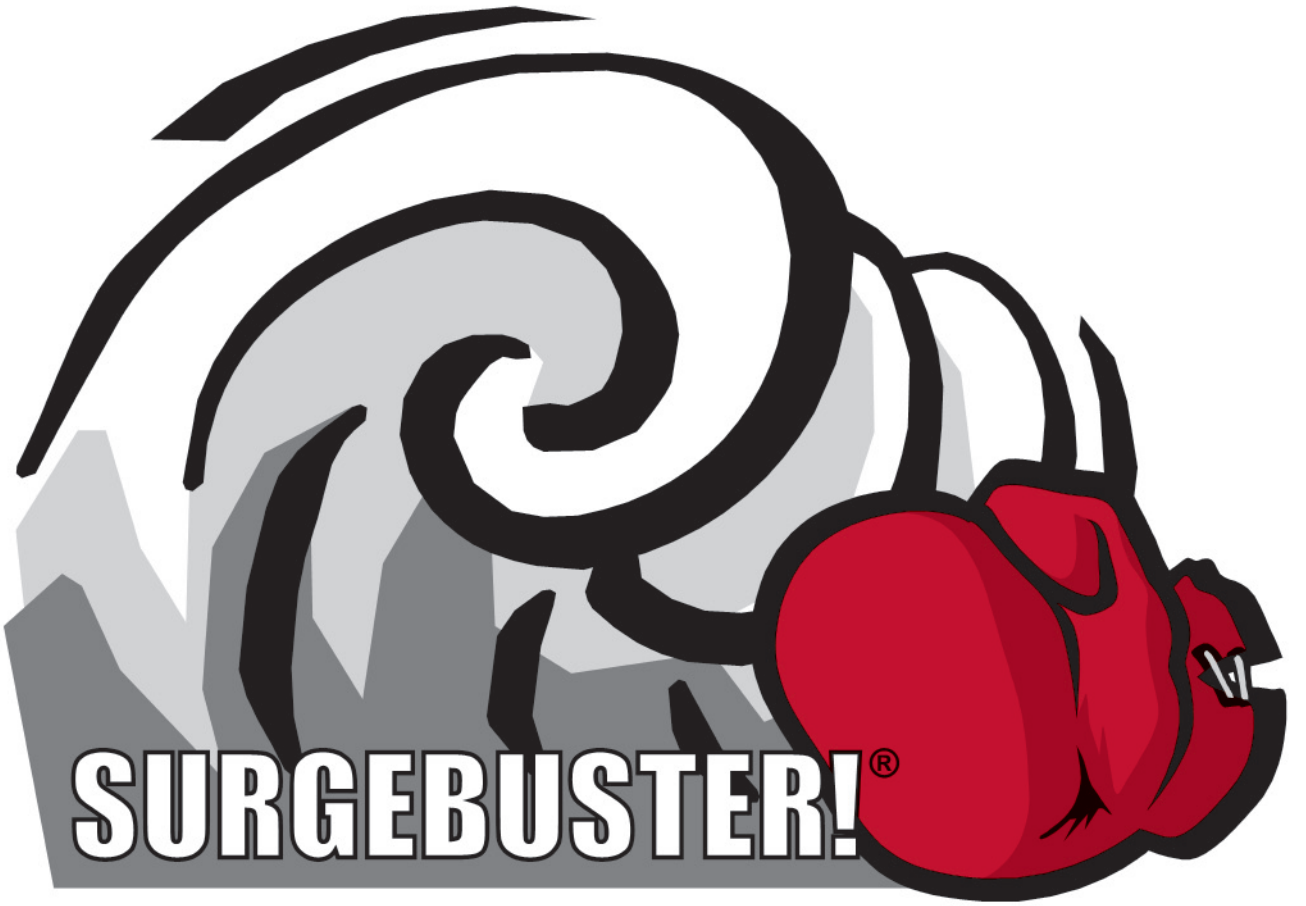

A member of the Swing-Flex® Family

Val-Matic is so confident in the SURGEBUSTER'S non-slam performance that we guarantee* the valve will outperform any air cushion swing check valve with weight and lever.

***Warranty details available upon request.**

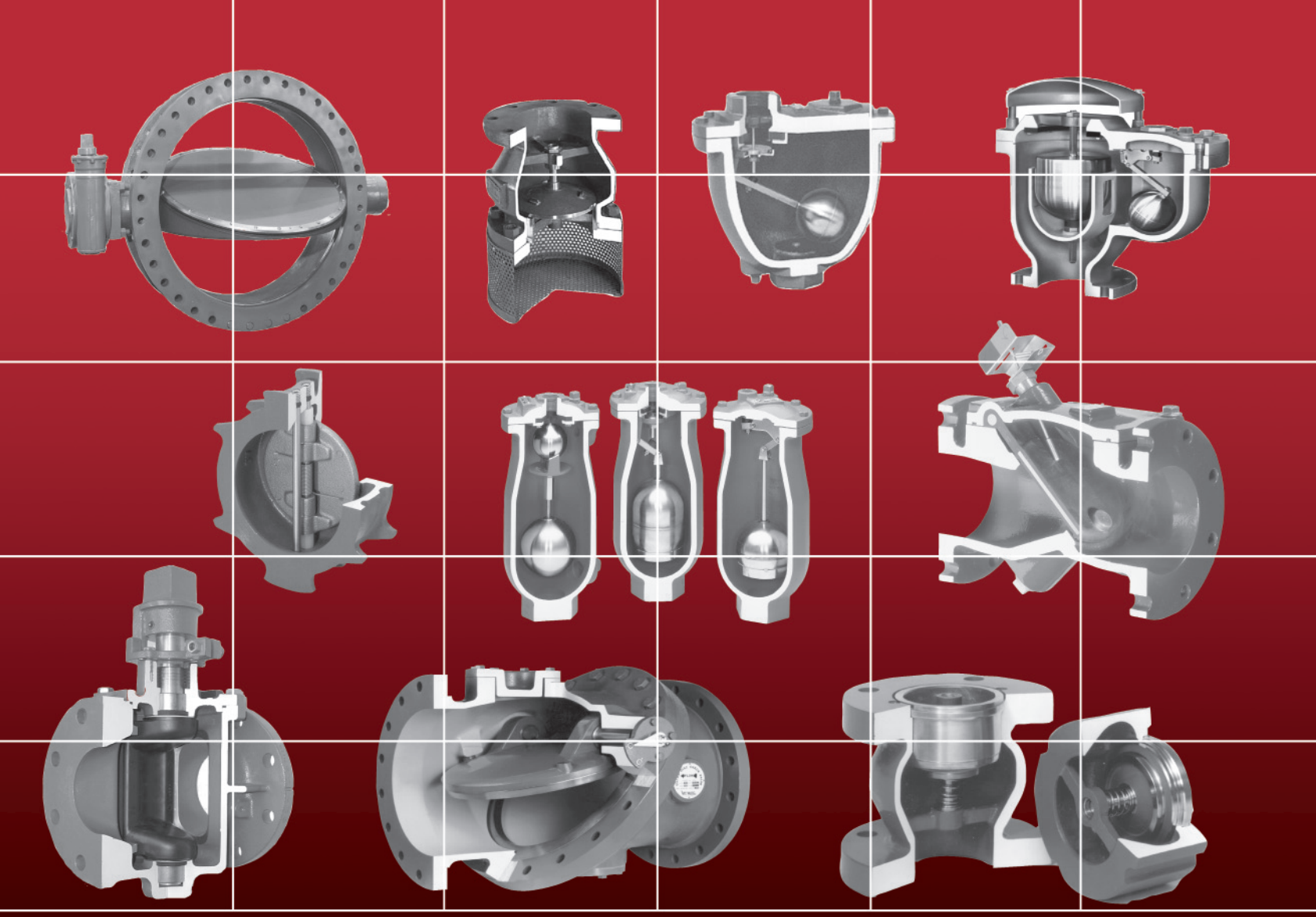

Make the change to QUALITY!

Specify VAL-MATIC®

Val-Matic's quality of design and meticulous workmanship has set the standards by which all others are measured. Quality design features such as Type 316 stainless steel trim as standard on Air Release, Air/Vacuum and Combination Air Valves...combined resilient/metal to metal seating for Silent Check® Valves...stabilized components that provide extended life of the Dual Disc® Check Valves...high strength and wear resistant aluminum bronze trim as standard for Tilted Disc® Check valves...unrestricted full flow area through Swing-Flex® Check Valves...heavy duty stainless steel screened inlet on Sure Seal® Foot Valves...a Cam-Centric® Plug Valve with more requested features than any other eccentric plug valve, and the American-BFV® Butterfly Valve that provides a field replaceable seat without the need for special tools. These features coupled with our attention to detail put Val-Matic valves in a class by themselves.

Val-Matic is totally committed to providing the highest quality valves and outstanding service to our customers. Complete customer satisfaction is our goal.

VAL-MATIC®

ISO 9001:2008 certified company

VAL-MATIC VALVE AND MANUFACTURING CORP.

905 RIVERSIDE DRIVE • ELMHURST, IL 60126
630/941-7600 • FAX: 630/941-8042
www.valmatic.com valves@valmatic.com

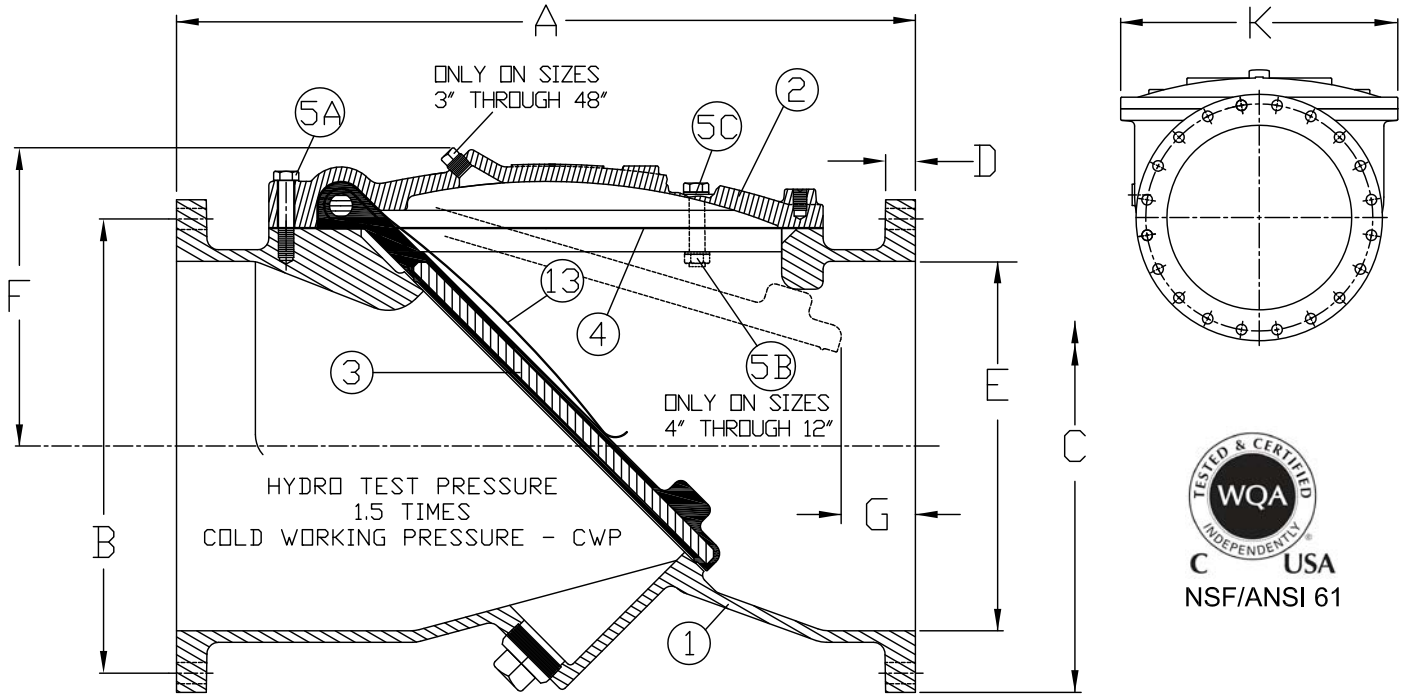

NSF/ANSI 61

SEE DRAWING NO. VM-7202-M FOR STANDARD MATERIALS OF CONSTRUCTION.

DRAWING DEPICTS 24" SIZE TO SCALE.

ANSI CLASS 125

VALVE SIZE	MODEL NO.	CWP (PSI)	A	B	C	D	E	F	G	K	BOLT SIZE	NO. OF BOLTS
2	7202	250	8.00	4.75	6.00	0.63	2.00	3.38	1.63	5.18	5/8	4
2 1/2	7225	250	8.50	5.50	7.00	0.68	2.50	3.38	1.63	5.18	5/8	4
3	7203	250	9.50	6.00	7.50	0.75	3.00	5.12	1.63	7.50	5/8	4
4	7204	250	11.50	7.50	9.00	0.75	4.00	5.75	2.12	8.25	5/8	8
6	7206	250	15.00	9.50	11.00	0.75	6.00	6.88	2.12	11.12	3/4	8
8	7208	250	19.50	11.75	13.50	0.88	8.00	8.38	2.88	16.00	3/4	8
10	7210	250	24.50	14.25	16.00	1.18	10.00	10.75	3.12	21.00	7/8	12
12	7212	250	27.50	17.00	19.00	1.25	12.00	12.50	3.43	24.00	7/8	12
14	7214	250	31.00	18.75	21.00	1.38	14.00	13.00	3.63	23.25	1	12
16	7216	250	32.00	21.25	23.50	1.43	16.00	14.25	3.25	25.25	1	16
18	7218	250	36.00	22.75	25.00	1.56	18.00	15.25	3.12	28.25	1 1/8	16
20	7220	250	40.00	25.00	27.50	1.68	20.00	16.88	3.50	30.63	1 1/8	20
24	7224	250	48.00	29.50	32.00	1.88	24.00	19.25	5.00	36.00	1 1/4	20
30	7230	150	56.00	36.00	38.75	2.12	30.00	23.00	5.75	45.88	1 1/4	28
30	7230A	250	56.00	36.00	38.75	2.12	30.00	23.00	5.75	45.88	1 1/4	28
36	7236	150	63.00	42.75	46.00	2.38	36.00	27.38	3.88	55.00	1 1/2	32
36	7236A	250	63.00	42.75	46.00	2.38	36.00	27.38	3.88	55.00	1 1/2	32
42	7242	150	70.00	49.50	53.00	2.63	42.00	36.88	0.12	60.18	1 1/2	36
42	7242A	250	70.00	49.50	53.00	2.63	42.00	36.88	0.12	60.18	1 1/2	36
48	7248	150	76.00	56.00	59.50	2.75	48.00	40.66	0.12	68.00	1 1/2	44
48	7248A	250	76.00	56.00	59.50	2.75	48.00	40.66	0.12	68.00	1 1/2	44

Revised 3-31-11

SURGEBUSTER CHECK VALVE

DATE 10-17-08

VAL-MATIC VALVE AND MANUFACTURING CORP.

DRWG. NO. VMC-7202

Manual No.
SBCV-OM1-7

SurgeBuster® Check Valve

Operation, Maintenance and Installation Manual

INTRODUCTION	1
RECEIVING AND STORAGE	1
DESCRIPTION OF OPERATION	1
INSTALLATION	2
VALVE CONSTRUCTION	2
MAINTENANCE	2
TROUBLESHOOTING	3
DISASSEMBLY	3
RE-ASSEMBLY	3
BACKFLOW ACTUATOR (OPTIONAL)	4
MECH. INDICATOR (OPTIONAL)	5
LIMIT SWITCH (OPTIONAL)	5
BOTTOM DASHPOT (OPTIONAL)	6
PARTS AND SERVICE	7
WARRANTY	8

VAL-MATIC® VALVE AND MANUFACTURING CORP.

905 Riverside Dr. • Elmhurst, IL 60126
Phone (630) 941-7600 • Fax (630) 941-8042
www.valmatic.com

VAL-MATIC'S SURGEBUSTER® CHECK VALVE OPERATION, MAINTENANCE AND INSTALLATION

INTRODUCTION

The Surgebuster® Check Valve has been designed to give years of trouble-free operation. This manual will provide you with the information needed to properly install and maintain the valve and to ensure a long service life. The valve is opened by the fluid flow in one direction and closes automatically to prevent flow in the reverse direction.

An optional backflow actuator may be mounted on the bottom of the valve to allow manual backflow through the valve in the reverse direction.

Optional Mechanical Indicators and Limit Switches may be mounted on the valve cover to provide local and remote position indication.

The valve is of the swing check type utilizing an angled seat and fully encapsulated, resilient disc. It is capable of handling a wide range of fluids including flows containing suspended solids. The Size, Flow Direction, Maximum Working Pressure, and Series No. are stamped on the nameplate for reference.

CAUTION

Do not use valve for line testing at pressures higher than nameplate rating or damage to valve may occur.

The "Maximum Working Pressure" is the non-shock pressure rating of the valve at 150°F. The valve is not intended as an isolation valve for line testing above the valve rating.

RECEIVING AND STORAGE

Inspect valves upon receipt for damage in shipment. Unload all valves carefully to the ground without dropping. Do not allow lifting slings or chains to come in contact with the seat area; use eyebolts or rods through the flange holes on large valves.

WARNING

Do not use threaded holes in cover for lifting the valve. Serious injury may result.

Valves should remain crated, clean and dry until installed to prevent weather related damage. For long term storage greater than six months, the rubber surfaces of the disc should be coated with a thin film of FDA approved grease such as Lubriko #CW-606. Do not expose disc to sunlight or ozone for any extended period.

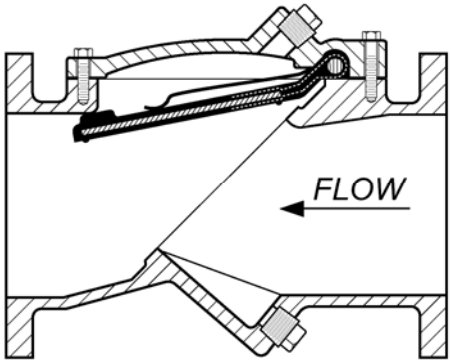

FIGURE 1. SURGEBUSTER® CHECK VALVE

DESCRIPTION OF VALVE OPERATION

The valve is designed to prevent reverse flow automatically. During system flow conditions, the movement of the fluid forces the disc to the open position allowing 100% un-restricted flow area through the valve. Under reverse flow conditions, the disc rapidly returns to the closed position to prevent reverse flow.

Several optional features are a backflow actuator, mechanical indicator, and limit switch. All of these options ship loose of the valve and require field installation.

INSTALLATION

Correct installation of the Surgebuster® is important for proper operation. It may be installed in either horizontal or vertical flow-up applications. However, when horizontal, the valve must be installed with the nameplate facing up and the cover level. In all installations, the flow arrow cast in the valve cover must be pointed in the direction of flow during normal system operation.

WARNING

Do not use threaded holes in cover for lifting the valve. Serious injury may result.

FLANGED ENDS: Flanged valves can be mated with raised or flat-faced pipe flanges equipped with full-face or ring-type resilient gaskets. The valve and adjacent piping must be supported and aligned to prevent cantilevered stress on the valve. Once the flange bolts or studs are lubricated and inserted around the flange, tighten them uniformly hand tight. The tightening of the bolts should then be done in graduated steps using the **crossover tightening** method. Recommended lubricated torque values for use with resilient gaskets (75 durometer) are given in Table 1. If leakage occurs, allow gaskets to absorb fluid and check torque and leakage after 24 hours.

Do not exceed bolt rating or extrude gasket.

CAUTION

The use of ring gaskets or excessive bolt torque may damage valve flanges.

TABLE 2. FLANGE BOLTS TORQUES

VALVE SIZE (in)	BOLT DIA (in)	RECOM. TORQUE (ft-lbs)	MAX. TORQUE (ft-lbs)
3	5/8	25	90
4	5/8	25	90
6	3/4	30	150
8	3/4	40	150
10	7/8	45	205
12	7/8	65	205
14	1	80	300
16	1	80	300
18	1 1/8	100	425
20	1 1/8	100	425
24	1 1/4	150	600
30	1 1/4	160	600
36	1 1/2	300	900
42	1 1/2	300	900
48	1 1/2	300	1,000

VALVE CONSTRUCTION

The standard Surgebuster® Check Valve is constructed of rugged cast iron with a rubber encapsulated disc. See the specific Materials List submitted for the order if other than standard cast iron construction. The disc is the only moving part assuring long life with minimal maintenance. The general details of construction are illustrated in Figure 2. The body (1) is flanged for connection to the pipeline with an open top sealed with a cast cover (2). The disc (3) and disc accelerator (13) are retained by the cover.

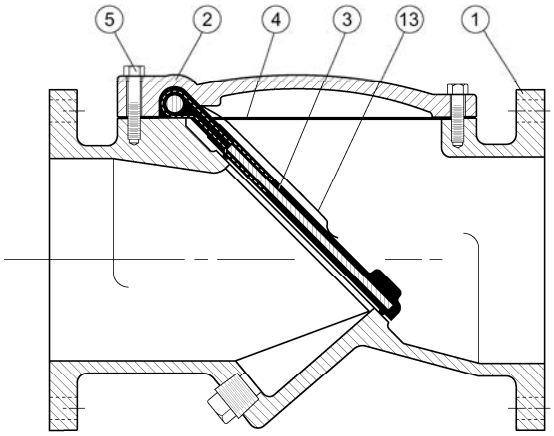

ITEM	DESCRIPTION	MATERIAL
1	Body	Ductile Iron – 250 psi Cast Iron – 150 psi
2	Cover	Ductile Iron – 250 psi Cast Iron – 150 psi
3	Disc*	Steel With Buna-N Facing
4	Cover seal*	Buna-N or Non-Asbestos
5	Cover Bolt	Alloy Steel
13	Accelerator	Stainless Steel

*RECOMMENDED SPARE PART

FIGURE 2. CHECK VALVE CONSTRUCTION

MAINTENANCE

The SurgeBuster® Check Valve requires no scheduled lubrication or maintenance. For service or inspection, the valve can be serviced without removal from the line.

VALVE INSPECTION: If inspection of the valve is required, follow the Disassembly Instructions given on page 3.

TROUBLESHOOTING

Several problems and solutions are presented below to assist you in troubleshooting the valve assembly in an efficient manner.

- Leakage at Bottom Actuator: Remove line pressure and exercise actuator. If leak persists, replace seals in actuator; see the Backflow Actuator Seal Replacement Procedure on page 4.
- Leakage at Cover or Flanges: Tighten bolts, replace cover seal.
- Valve Leaks when Closed: Inspect disc for damage and replace. Inspect metal seating surface and clean if necessary.
- Valve Does not Open: Check for obstruction in valve or pipeline; see Disassembly procedure on page 4. Operating pressure may be less than cracking pressure. If less than 0.5 psig, review application with factory.
- Valve Slams Closed: Add additional accelerator.

DISASSEMBLY

The valve can be disassembled without removing it from the pipeline. Or for convenience, the valve can be removed from the line. All work on the valve should be performed by a skilled mechanic with proper tools and a power hoist for larger valves. Disassembly may be required to inspect the disc for wear or the valve for deposits.

WARNING

The line must be drained before removing the cover or pressure may be released causing bodily harm.

1. Relieve pressure and drain the pipeline. Refer to Figure 2 on page 2. Remove the cover bolts (5) on the top cover.
2. Pry cover (2) loose and lift off valve body. 14" and larger valves have tapped holes in cover for lifting eyes.
3. Remove disc (3) and inspect for cracks, tears or damage in rubber sealing surface.
4. Clean and inspect parts. Replace worn parts as necessary and lubricate parts with FDA grease such as Lubriko #CW-606.

RE-ASSEMBLY

All parts must be cleaned. Gasket surfaces should be cleaned with a stiff wire brush in the direction of the serrations or machine marks. Worn parts, gaskets and seals should be replaced during reassembly.

1. Lay disc (3) over seat with beaded seating surface directed down.
2. Lay disc accelerator (13) over center of disc hinge. If two accelerators are provided, stack them over the center of the disc hinge.
3. Lay cover gasket (4) and cover (2) over bolt holes and disc hinge.
4. Insert lubricated bolts (5) noting that the bolts in the hinge area are longer than the other cover bolts.
5. Cover bolts should be tightened to the following specifications during assembly.

TABLE 2. VALVE COVER BOLT TORQUES

VALVE	SIZE	TORQUE (ft-lbs)
2"-2.5"	1/2"	75
3"	7/16"	50
4"	1/2"	75
6"	7/16"	50
8"	9/16"	110
10"	3/4"	250
12"-20"	7/8"	400
24"	1"	500
30"	1 1/8"	600
36"	1 1/4"	900
42"	1 1/2"	1,400
48"	1 1/2"	1,400

BACKFLOW ACTUATOR FIELD INSTALLATION AND MAINTENANCE (OPTIONAL)

BACKFLOW ACTUATOR OPERATION:

An optional **backflow actuator** assembly is available which can be easily installed in the field. The actuator is not designed to operate at the valve's Maximum Working Pressure rating. Therefore, prior to using the actuator, close the pump isolation valve and bleed off line pressure. To operate, turn the handle clockwise. This will open the valve disc allowing backflow through the valve. The handle should turn easily. When resistance is felt, the disc has reached its body stop and is in the full open position. Upon completion of the back flushing operation, turn the handle counter-clockwise and the valve will automatically return to the closed position. Lock the actuator in the closed position with the jam nut provided. The system is again ready for normal operation

WARNING

Relieve line pressure before using backflow actuator or damage may occur.

BACKFLOW ACTUATOR FIELD INSTALLATION:

The backflow actuator is supplied as an optional assembly from the factory, which is shipped loose with the valve.

WARNING

Removal of the bottom plug while under pressure may cause bodily harm.

1. Depressurize and drain the pipeline.

2. Remove the pipe plug in the bottom boss of the valve.

3. Inspect the backflow rod and place in the non-extended position. (The rod should extend about 1" past the end of the brass bushing.) Apply Teflon thread sealant to brass threads.

4. Insert the threaded end of the assembly into the valve boss. Slowly turn the assembly into the boss taking care not to cross-thread the bushing. Continue turning the assembly into the valve for a tight fit.

BACKFLOW ACTUATOR SEAL REPLACEMENT:

There are two parts (8 & 9) on the backflow actuator that are subject to wear. To replace the seals, the pipeline must first be depressurized and drained. Next, remove the backflow assembly from the valve by turning the brass bushing (6) counter-clockwise. Disassemble the actuator as follows:

1. Remove one of the vinyl caps (12).

2. Remove the T-Handle (10) and jam nut (11) from the rod (7).

3. Remove the rod (7) from the bushing (6) by screwing in the rod fully clockwise and pull the rod through the valve end of the bushing (6).

4. Lubricate new seals with FDA approved grease such as Lubriko #CW-606 and install in the bushing end grooves.

5. Clean, lubricate, and reinstall rod in bushing.

6. Re-install jam nut (11) and T-Handle (10).

7. Place vinyl cap (12) on handle (10).

8. Apply Teflon thread sealant to bushing and carefully thread into valve taking care not to cross-thread the bushing

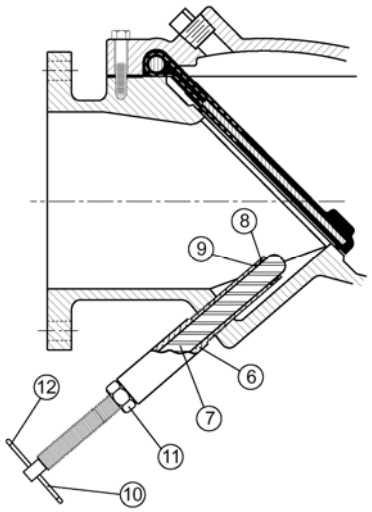

FIGURE 3. BACKFLOW ACTUATOR ASSEMBLY

BACKFLOW ACTUATOR PARTS LIST

Item	Description	Material
6	Bushing	Lead Free Brass
7	Rod	Stainless Steel
8	Rod Wiper*	Molythane
9	O-Ring*	Buna-N
10	Handle	Stainless Steel
11	Jam nut	Brass
12	Cap*	Vinyl

*RECOMMENDED SPARE PART

MECHANICAL INDICATOR (OPTIONAL)

The mechanical indicator is an option that fits into the cover and can easily be installed in the field by going through the following steps. The mechanical indicator is used to visually indicate when the valve is opened or closed.

1. Remove line pressure and drain valve.

WARNING
Removal of the pipe plug while under pressure may cause bodily harm.

2. Remove the pipe plug from the cover.
3. Apply pipe joint compound to indicator body (21) threads.
4. Insert the indicator body (21), without the indicator plate (27), into the valve cover and tighten. Make sure that two of the tapped holes in the indicator body (21) are aligned with the valve and pipeline. This will ensure proper orientation of the indicator plate.
5. Remove the two socket head screws (31) from the indicator body (21).
6. Slide the indicator plate (27) over the indicator rod (23) and spring (28).
7. Align the indicator plate (27) as shown on the back of this card and secure with the 5mm socket head screws (31).
8. Connect the spring (28) to the indicator plate (27) notch

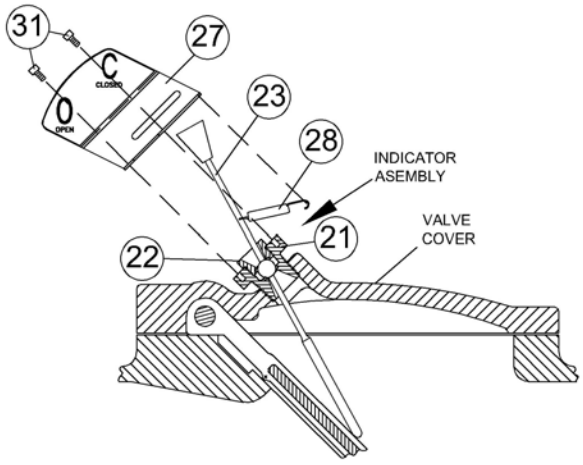

FIGURE 4. MECHANICAL INDICATORASSEMBLY

MECHANICAL INDICATOR PARTS LIST

Item	Description	Material
21	Body	Brass
22	Bushing	Brass
23	Rod	Stainless Steel T316
27	Plate	Stainless Steel T316
28	Spring	Stainless Steel T302
32	Screws	Stainless Steel T316

LIMIT SWITCH (OPTIONAL)

The limit switch is used in conjunction with the Mechanical Indicator. The standard limit switch is MICROSWITCH Model Number 914CE20-3. The limit switch is SCADA (Supervisory Control and Data Acquisition) compatible for applications requiring open/close indication.

NEMA Ratings: 1, 2, 4, 6, 6P, 12, 13
UL Ratings: 5 AMPS, 1/10 HP, 125 or 250 VAC, SPDT

Installation:

1. Attach limit switch assembly to indicator using the supplied screws (34) and bracket (31).

2. Position the assembly so that the switch trips when the valve is closed.

3. Connect wiring to either the normally open or normally closed contact as shown in the schematic diagram.

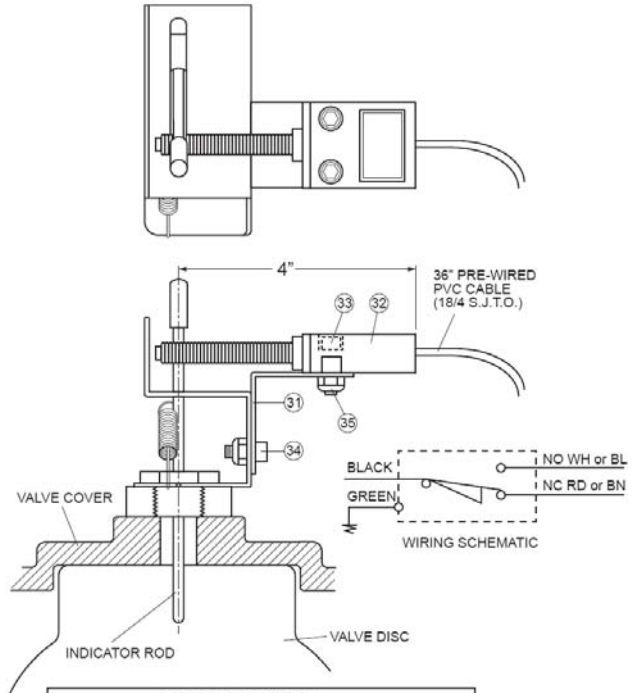

BILL OF MATERIAL		
PART NO.	DESCRIPTION	QTY.
31	MOUNTING BRACKET	1
32	LIMIT SWITCH (SPDT) HONEYWELL 914CE20-3 ALLEN BRADLEY 802B-CSACXSXCE	1
33	SCREW	2
34	SCREW	2
35	NUT	4

FIGURE 5. LIMIT SWITCH ASSEMBLY

BOTTOM MOUNTED OIL DASHPOT FIELD INSTALLATION AND MAINTENANCE (OPTIONAL)

DASHPOT FIELD INSTALLATION: The bottom dashpot is supplied as an optional assembly from the factory. This unit provides control of the disc's final 10% travel to the closed position to reduce valve slam and water hammer. The 10% travel time is adjustable between 1 and 5 seconds.

1. Depressurize and drain the valve and pipeline.

WARNING
Removal of the bottom plug in the valve while under pressure may cause bodily harm.

2. Remove the pipe plug in the bottom boss of the valve. Apply Teflon thread sealant or tape to brass threads on the dashpot.

3. Insert the threaded end of the assembly into the valve boss. Slowly turn the assembly into the boss taking care not to cross-thread the bushing. Continue turning the assembly into the valve for a tight fit and so that the tank is upright.

4. Adjust the air pressure in the tank to be a minimum of 50 psi over the line pressure. Set the flow control valve in the mid position (i.e. 1 turn open). The dashpot rod should be extended and hold the disc open about 1 inch. The water line pressure will close the disc.

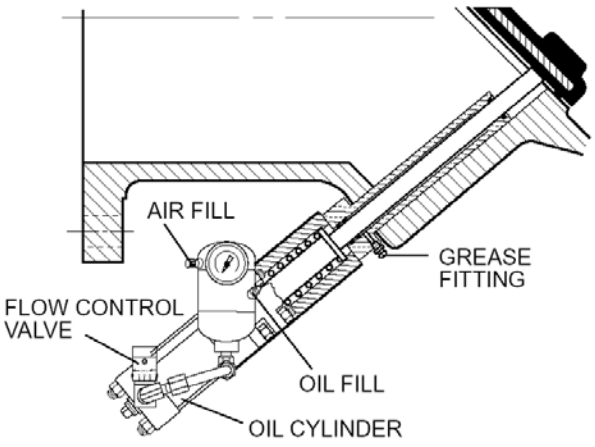

FIGURE 6. BOTTOM MOUNTED OIL DASHPOT

CHECKING OIL AND GREASE LEVELS:

1. The check valve should be closed.

2. The air in the oil reservoir must be bled from the reservoir, using the air fill valve mounted on the reservoir.

3. Remove the pipe plug from the oil reservoir fill port.

4. Add hydraulic fluid equal to Mobil #DTE 24 until fluid is up to level indicated on the reservoir. Replace pipe plug.

5. Recharge the reservoir with air pressure to a minimum of 50 psi over the water line pressure.

6. The grease level cannot be checked but it is recommended that the grease fitting be charged with grease twice a year. Use a cartridge grease gun and pump grease into the fitting using two full strokes. An FDA approved grease such as Lubriko #CW-606 should be used (Master Lubricants Company, Philadelphia, PA)

DASHPOT SEAL REPLACEMENT: There are several seals in the unit that may require replacement.

1. Depressurize and drain the valve and pipeline.

2. Unscrew the dashpot from the valve and remove the 4 bolts holding the dashpot spacer.

3. Replace the (2) rod wipers and o-ring seal.

4. If the oil cylinder is leaking oil, tighten the tie rod nuts. The cylinder should be returned to the factory for rebuilding.

5. Reinstall the unit as listed above for a new unit.

HANDPUMP OPERATION: The Dashpot may be equipped with a hand pump as shown in Figure 7. The hand pump can be used to drive the valve partially open using hydraulic oil pressure.

1. To open the Check Valve, close the round Release Knob (turn clockwise 3 turns), insert the pump handle into the pump, and stroke the pump several times.

2. To close the Check Valve, open the Release Knob (turn counterclockwise 3 turns) to release the oil pressure.

Hand pump: Simplex Series P1000.

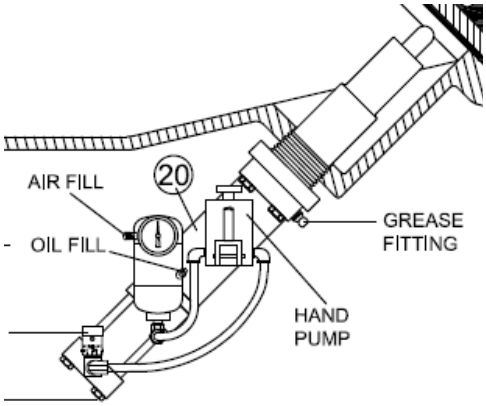

FIGURE 7. DASHPOT WITH HANDPUMP

PARTS AND SERVICE

Parts and service are available from your local representative or the factory. Make note of the valve Model No. and Working Pressure located on the valve nameplate and contact:

Val-Matic Valve and Mfg. Corp.
905 Riverside Drive
Elmhurst, IL 60126
Phone: (630) 941-7600
Fax: (630) 941-8042

A sales representative will quote prices for parts or arrange for service as needed.

VAL-MATIC SURGEBUSTER LIMITED WARRANTY

Val-Matic Valve and Manufacturing Corporation warrants the Surgebuster to outperform any manufacturer's normally equipped Air Cushion, Weight and Lever Swing Check Valve with respect to surge pressure normally generated by check valve closure for installations within the manufacturer's published ratings of the valve with regard to pressure, temperature and installation orientation. Should the Val-Matic Surgebuster fail to outperform any Air Cushion, Weight and Lever Swing Check Valve during a period of twelve (12) months from the date of installation or eighteen (18) months from the date of shipment, whichever comes first, Val-Matic shall pay for the cost of replacement of the Surgebuster with a comparably rated Air Cushion, Weight and Lever Swing Check valve. This warranty is subject to the following restrictions:

1. This warranty shall not apply when valve performance is or has been affected by misuse, abuse or negligence in either installation, operation or maintenance.
2. This warranty shall not apply to the cost of maintenance, adjustment, or installation of the Surgebuster.
3. The Surgebuster shall not be operated outside the specifications as published by Val-Matic.
4. Notices of claims against this warranty must be sent via certified mail to Val-Matic within 15 days of the first instance of an event giving rise to a possible claim against this warranty. Val-Matic shall have the right to test and adjust the Surgebuster and any replacement valve in the customer's application with the system operating thru full on/off cycles as needed.
5. If the customer replaces a Surgebuster valve pursuant to this warranty, the installation and application of the new valve must be identical to that of the valve being replaced in all respects, including, but not limited to, location and placement of the Surgebuster valve. Val-Matic shall in no event be liable for costs or expenses in excess of the cost of the replacement valve.
6. This warranty is limited to pressure surges generated by check valve closure under reverse flow conditions. It does not apply to pressure surges generated by other system dynamics.
7. If, after the customer replaces the Surgebuster with a normally equipped Air Cushion, Weight and Lever Swing Check Valve and Val-Matic tests such replacement valve in the customer's application, such tests shows the Surgebuster valve producing less surge pressure than the replacement valve, then the customer shall be responsible for the expenses incurred by Val-Matic. If the tests show the Surgebuster valve, after adjustment produced more surge pressure than the replacement valve, then Val-Matic shall reimburse customer for the documented cost of replacement of the Surgebuster valve.
8. Val-Matic's sole liability and the customer's sole remedy under this warranty and for any and all other claims arising out of the purchase and use of the Surgebuster valve shall be limited to replacement of the valve. In no event will Val-Matic be liable for consequential damages even if Val-Matic has been advised of the possibility of such damages. This warranty is expressly in lieu of any other expressed or implied warranties, including any implied warranty of merchantability or fitness for a particular purpose, and any other obligation on the part of Val-Matic.
9. If Val-Matic shall, at the request of the customer, render assistance of any kind in operating the valve, or any part of it, or in remedying any defects at the time, the assistance shall in no case be deemed an acknowledgment on Val-Matic's part of a breach by it of this warranty, or excuse for any failure of the customer to fully keep and perform the conditions of this warranty.
10. This warranty shall be construed according to the laws of the State of Illinois. Any actions brought to enforce this warranty must be brought in the state or federal courts located in Cook County, Illinois. The prevailing party in any litigation concerning this warranty shall be entitled to recover its reasonable attorney's fees and costs from the non-prevailing party.

LIMITED WARRANTY

All products are warranted to be free of defects in material and workmanship for a period of one year from the date of shipment, subject to the limitations below.

If the purchaser believes a product is defective, the purchaser shall: (a) Notify the manufacturer, state the alleged defect and request permission to return the product; (b) if permission is given, return the product with transportation prepaid. If the product is accepted for return and found to be defective, the manufacturer will, at his discretion, either repair or replace the product, f.o.b. factory, within 60 days of receipt, or refund the purchase price. Other than to repair, replace or refund as described above, purchaser agrees that manufacturer shall not be liable for any loss, costs, expenses or damages of any kind arising out of the product, its use, installation or replacement, labeling, instructions, information or technical data of any kind, description of product use, sample or model, warnings or lack of any of the foregoing. NO OTHER WARRANTIES, WRITTEN OR ORAL, EXPRESS OR IMPLIED, INCLUDING THE WARRANTIES OF FITNESS FOR A PARTICULAR PURPOSE AND MERCHANTABILITY, ARE MADE OR AUTHORIZED. NO AFFIRMATION OF FACT, PROMISE, DESCRIPTION OF PRODUCT OF USE OR SAMPLE OR MODEL SHALL CREATE ANY WARRANTY FROM MANUFACTURER, UNLESS SIGNED BY THE PRESIDENT OF THE MANUFACTURER. These products are not manufactured, sold or intended for personal, family or household purposes.

VAL-MATIC® VALVE AND MANUFACTURING CORP.

905 Riverside Dr. ● Elmhurst, IL 60126
Phone (630) 941-7600 ● Fax (630) 941-8042
www.valmatic.com

ROMAC INDUSTRIES, INC.
1-800-426-9341
MADE IN U.S.A

RFCA (Restrained Flanged Coupling Adapter)

Material Specifications

Flange Body: Ductile (nodular) iron, meeting or exceeding ASTM A 536, Grade 65-45-12. Flange meets the dimensional requirements of ANSI Class 125 and 150 bolt circles.

Gaskets: Compounded for water and sewer service in accordance with ASTM D 2000 (Sizes 3 - 12" have flange O-Ring gasket). Other compounds available for petroleum, chemical, or high temperature service.

Gland: Romac RomaGrip™. See page 7-6.

Restraining Bolts: 7/8 –9 roll thread, Ductile (nodular) iron, meeting or exceeding ASTM A 536.

Restraining Lugs: Ductile (nodular) iron, meeting or exceeding ASTM A 536. Heat treated using a proprietary process.

Lug Locators: Polyurethane, a thermal plastic.

T-bolts and Nuts: High strength low alloy steel T-head bolt. National coarse rolled thread and heavy hex nut. Steel meets AWWA C111 composition specifications. Stainless steel bolts and nuts available on request.

Coatings: Shop coat applied to cast parts for corrosion protection in transit. Fusion bonded epoxy available on request.

Use: Ductile Iron Pipe 3 - 24", cast iron pipe 3" - 24" (same OD's as ductile iron) and IPS size STD steel pipe 3 - 12".

To Order: Specify catalog number. **Example:** For a 12" RFCA Order: **RFCA - 13.20**

NOTE: 3" - 12" special Romac gasket works on both steel and D.I. ODs.

Not for use on PVC, HDPE pipe or plain-end mechanical joint fittings. For applications on PVC, please contact your Romac representative.

NOM. PIPE SIZE	GASKET RANGE	LENGTH	GLAND BOLTS QTY: SIZE	CATALOG NUMBER	LIST PRICE				WEIGHT (lbs.)
					Shopcoat w/Std. B&N	Shopcoat w/304 SS B&N	Fusion Epoxy w/Std. B&N	Fusion Epoxy w/304SS B&N	
3"	3.50-3.96	8.00"	4: 5/8" x 3"	RFCA - 3.96	$145.45	$157.56	$165.10	$177.20	21
4"	4.50-4.80	9.00"	4: 3/4" x 3 1/2"	RFCA -4.80	183.32	209.43	207.88	233.99	29
6"	6.63-6.90	9.25"	6: 3/4" x 4"	RFCA - 6.90	233.85	273.01	267.10	306.26	40
8"	8.63-9.05	9.25"	6: 3/4" x 4"	RFCA - 9.05	315.59	354.75	355.82	394.98	53
10"	10.75-11.10	10.25	8: 3/4" x 4"	RFCA - 11.10	581.96	634.17	669.69	721.91	83
12"	12.75-13.20	10.25"	8: 3/4" x 4"	RFCA - 13.20	632.13	684.34	739.86	792.07	110
14"	15.30	11.70"	10: 3/4" x 4 1/2"	RFCA -15.30	882.79	947.37	1,020.54	1,085.12	170
16"	17.40	11.70"	12: 3/4" x 4 1/2"	RFCA -17.40	1,225.93	1,302.91	1,410.23	1,487.21	200
18"	19.50	11.80"	12: 3/4" x 4 1/2"	RFCA -19.50	1,346.63	1,423.60	1,546.13	1,623.10	217
20"	21.60	11.80	14: 3/4" x 4 1/2"	RFCA - 21.60	1,521.19	1,611.94	1,772.94	1,863.69	256
24"	25.80	12.00"	16: 3/4" x 5"	RFCA - 25.80	1,845.38	1,959.61	2,130.38	2,244.61	305

Some initial axial movement may occur in lug style restraints as the lugs seat. Movement is directly related to the size of the piping system and the system pressure. In general terms movement of approximately 0.25" can be expected in restraints under 16". For larger sizes, movement of approximately 0.4" may be seen. If this is critical to your application please contact Romac Engineering for additional information.

ROMAC INDUSTRIES, INC.

INSTALLATION INSTRUCTIONS

Read installation instructions first before installing. Check parts to ensure that no damage has occurred during transit and that no parts are missing. Also check the diameter of the pipe and the size marked on the coupling to ensure you have the proper size.

FM APPROVED

RFCA Restrained Flange Coupling Adapter

NOT FOR USE ON PVC PIPE OR PLAIN END MECHANICAL JOINT FITTINGS

NOTE: Not for use on polyethylene pipe, plain end mechanical joint fittings or PVC pipe.

The "Stab-Fit" installation technique may also be employed on 3"-10" sizes.

Step 1 • Check the RFCA parts to insure that no damage has occurred during transit and that no parts are missing.

Step 2 • Clean pipe end for a distance of 2" greater than length of the RFCA.

Step 3 • Place RomaGrip gland on pipe end.

Step 4 • Lubricate the gasket and pipe surface with soapy water or other suitable gasket lubricant.

Step 5 • Place gasket over pipe with beveled edge toward the flange adapter.

Step 6 • Slide the RFCA on to the pipe. Position the pipe and flanged coupling against the mating flange, inserting flange gasket (14" and larger) between the flange faces. Assemble the flange joint using flange bolts.

⑥

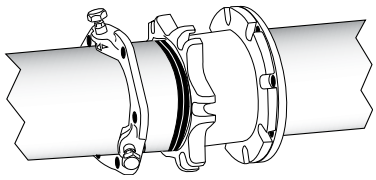

⑦

Step 7 • The pipe should be centered such that the space between the OD of the pipe and the ID of the RFCA is even all around the pipe. Slide the RFCA gasket into position with the beveled edge engaging the beveled end of the RFCA body.

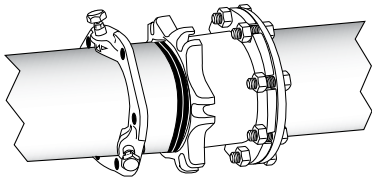

⑧

Step 8 • Slide the RomaGrip into position against the gasket, and insert T-bolts.

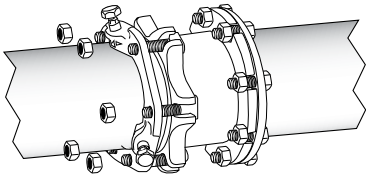

Step 9 • Tighten T-bolts evenly, alternating to diametrically opposite position at approximately 20 ft-lbs increments to the recommended torque for your size RFCA.

⑨

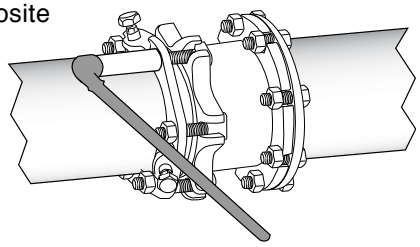

Recommended Torque:
3" RomaGrip - 45-65 ft-lbs.
4 - 24" RomaGrip - 75 - 90 ft-lbs.

Note:
90 ft-lbs. torque = 12" wrench w/90 lbs. force

For best results, wait 10 minutes and retighten bolts to proper torque.

Step 10 • Hand tighten the restrainer bolts until the restraining pads touch the surface of the pipe. The bolts should be tightened in a uniform criss-cross pattern, until the heads break off above the notch.

⑩

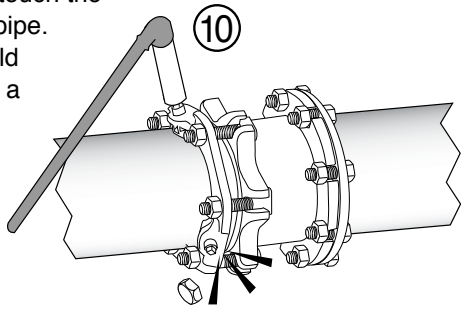

NOTE: Do not turn a bolt more than one turn before alternating to the next bolt.

Step 11 • Pressure test for leaks before backfilling.

Document # 20-9-0032 10/31/2007

21919 20th Avenue SE • Suite 100 • Bothell, WA 98021 • Phone (425) 951-6200 • 1-800-426-9341 • Fax (425) 951-6201

ROMAC INDUSTRIES, INC.

INSTALLATION INSTRUCTIONS

RFCA Restrained Flange Coupling Adapter

NOT FOR USE ON PVC PIPE OR PLAIN END MECHANICAL JOINT FITTINGS

PRECAUTIONS

1. Check flange to make sure the bolt holes match the RFCA.
2. Make sure a flange gasket is used between the mating flanges on sizes 14" and larger.
3. Check diameter of pipe to make sure you are using the correct size RFCA; also check gasket to make sure it is the size you think it is.
4. Be sure to clean pipe of as much dirt and corrosion as possible in the area that the gasket will seal.
5. Lubricate both the gasket and the pipe end with soapy water or approved pipe lubricant per ANSI/AWWA C111/ A21.11.
6. Make sure no foreign materials lodge between gasket and pipe.
7. Avoid loose fitting wrenches, or wrenches too short to achieve proper torque.
8. Keep threads free of foreign material to allow proper tightening.
9. Take extra care to follow proper bolt tightening procedures and torque recommendations. Bolts are often not tightened enough when a torque wrench is not used.
10. Be sure that the gland is centered around the pipe.
11. Pressure test for leaks before backfilling.
12. Backfill and compact carefully around pipe and fittings.
13. Some initial axial movement may occur in lug style restraints as the lugs seat. Movement is directly related to the size of the piping system and the system pressure. In general terms movement of approximately 0.25" can be expected in restraints under 16". For larger sizes, movement of approximately 0.4" may be seen. If this is critical to your application please contact Romac Engineering for additional information.

COMMON INSTALLATION PROBLEMS

1. Flange gasket not installed on sizes 14" and larger.
2. T-Bolts are not tightened to the proper torque.
3. Rocks or debris between pipe and gasket.
4. Dirt or debris between pipe and restraining pad.
5. Dirt on threads of bolts or nuts.
6. Restraining bolt heads not snapped off.
7. Not enough pipe inserted into bell.
8. Using the RFCA on IPS size steel pipe with wall thickness thinner than schedule 40 steel pipe. (3-12 inch sizes)

IF RFCA MUST BE REMOVED

1. Make sure pipe is not pressurized. Removing the restrainer could cause the pipe joint to separate.
2. To remove the RFCA, use a $^{5}/_{8}$" hex wrench or socket.
3. To reassemble, follow installation procedures. Tighten the restraining bolts using a $^{5}/_{8}$" hex wrench to 75-ft-lbs minimum.

21919 20th Avenue SE • Suite 100 • Bothell, WA 98021 • Phone (425) 951-6200 • 1-800-426-9341 • Fax (425) 951-6201

ROMAC INDUSTRIES, INC.
ROMAGRIP
MECHANICAL JOINT RESTRAINING GLAND
3 THROUGH 12 INCH
SUBMITTAL INFORMATION

USE

The Romac RomaGrip restraining gland is used for the restraint of mechanical joint ductile iron pipe, valves, fittings, and fire hydrants in water transmission and fire protection lines. It may also be used on steel pipe (minimum thickness schedule 40) with MJ by IPS transition gasket. The RomaGrip replaces costly concrete thrust blocks, corrodible steel tie rods and clamps. Not for use on plain end mechanical joint fittings. The RomaGrip may be used on cast iron pipe as long as it has the same OD as ductile iron pipe.

Note: Some initial axial movement may occur in lug style restraints as the lugs seat. Movement is directly related to the size of the piping system and the system pressure. In general terms movement of approximately 0.25 can be expected in restraints under 16". For larger sizes, movement of approximately 0.40 may be seen. If this is critical to your application please contact Romac Engineering for additional information.

MATERIALS

Gland	Ductile (nodular) iron, meeting or exceeding ASTM A 536-84, Grade 65-45-12.
Gaskets	A standard MJ gasket is used with this fitting. See ANSI/AWWA C111/A21.11 for gasket specs.
Restraining Bolt	7/8 –9 roll thread, Ductile (nodular) iron, meeting or exceeding ASTM A 536-84.
Restraining Lugs	Ductile (nodular) iron, meeting or exceeding ASTM A 536-84. Heat treated using a proprietary process.
Lug Locators	Polyurethane, a thermo-set plastic.
Coatings	Shop coat applied to the casting for corrosion protection in transit. Epoxy coating optional.

PERFORMANCE

Nominal Pipe Size	Number of Restraining Bolts	Approx. Weight (lbs)	Working Pressure (psi)	Test Pressure (psi)	Maximum Joint Deflection
3	2	6	350	700	5°
4	2	7.5	350	700	5°
6	3	11	350	700	5°
8	4	16.5	350	700	5°
10	6	23	350	700	5°
12	8	29.5	350	700	5°

FM Approved FM approved for cast iron and ductile iron pipe at 175 psi working pressure (4 : 1 test).

UL Listed UL listed for cast iron and ductile iron pipe.

This information is based on the best data available at the date printed above, please check with Romac Engineering Department for any updates or changes.

Phone (425) 951 6200 • Toll Free 1 800 426 9341 • Fax (425) 951 6201 • www.romacindustries.com

3.03 PUMPS

This section provides the information pertaining to the pumps for this project.

This section is structured as follows:

3.03.1 PUMP SPECIFICATIONS
3.03.2 PUMP DIMENSIONAL DRAWINGS
3.03.3 PUMP PERFORMANCE CURVES
3.03.4 PUMP OPERATION & MAINTENANCE MANUALS
3.03.5 RECOMMENDED MAINTENANCE
3.03.6 PUMP DATA SHEETS
CORD GRIPS
PUMP LIFTINF EYE

300DLFU630

Model Designation

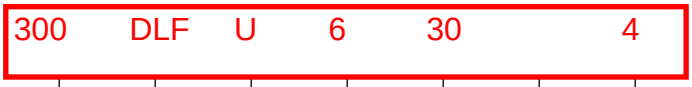

DISCHARGE SIZE – mm

50mm – 2"	200mm – 8"
80mm – 3"	250mm – 10"
100mm – 4"	300mm – 12"
150mm – 6"	

MODEL TYPE

DLF/DLMF – submersible sewage pump
DLFM/DLMFM – FM explosion proof designation

GEOGRAPHIC DESIGNATION

U – U.S.A. market

HERTZ

6 - 60

RATED KW

1.5 – 2HP	7.5 – 10HP	22 – 30HP
2.2 – 3HP	11 – 15HP	30 – 40HP
3.7 – 5HP	15 – 20HP	37 – 50HP
5.5 – 7½HP	18 – 25HP	45 – 60HP

PHASE

none – three phase

VOLTAGE

2 - 208/230
4 - 460
5 - 575

Model DLFU
Specifications

	Standard	Optional
Size	2, 3, 4, 6, 8, 10, 12 inch	
Range of HP	2 to 60 HP	
Range of Performance	Capacity 13 to 4000 GPM Head 7 to 243 feet	
Limitation		
Maximum Water Temperature	104°F (40°C)	
Synchronous Speed	1800 RPM	
Materials		
Casing	Cast Iron	
Impeller	Cast Iron (2 to 60HP) Ductile Iron (150-300 DLFU 40 to 60 HP)	
Shaft	403 Stainless Steel (2 to 5HP) 420 Stainless Steel (7½ to 60HP)	
Motor Frame	Cast Iron	
Fastener	304 Stainless Steel	
Mechanical Seal	Double Mechanical Seal	
Material – Upper Side	Carbon/Ceramic (2 to 60HP)	Tungsten Carbide/Tungsten Carbide
Material – Lower Side	Silicon Carbide/Silicon Carbide (2 to 60HP) Tungsten Carbide/Tungsten Carbide (150-300 DLFU 50 and 60HP only)	Tungsten Carbide/Tungsten Carbide
Impeller Type	Semi-open (2 to 30HP) Enclosed (40 to 60HP)	
Bearing	Prelubricated Ball Bearing	
Motor	Insulation Class F	FM Explosion Proof, Class 1, Division 1, Group C, D
Three Phase	208/230/460V	
Service Factor	1.15	
Motor Protection	Thermal Detector – Klixons Mechanical Seal Leakage Detector – Float Switch	
	Submersible cable 33 ft. (2 to 5HP) 40 ft. (7½ to 60HP)	____ ft. (customer specified)
Accessories		QDC System

A. General:
Provide submersible sewage pumps suitable for continuous duty operation underwater without loss of watertight integrity to a depth of 65 feet. Pump system design shall include a guide rail system be such that the pump will be automatically connected to the discharge piping when lowered into place on the discharge connection. The pump shall be easily removable for inspection or service, requiring no bolts, nuts, or other fasteners to be disconnected, or the need for personnel to enter the wet well. The motor and pump shall be designed, manufactured, and assembled by the same manufacturer.

B. Manufacturer:
EBARA International Corporation

C. Pump Characteristics:
Pumps shall conform to the following requirements:

Number of units	
Design flow (gpm)	
Design TDH (ft)	
Minimum shut off head (ft)	
RPM	1800
Maximum HP	
Minimum efficiency at design (%)	
Minimum power factor at design (%)	
Voltage/HZ	208/230V, 460V / 60
Phase	3

D. Pump Construction:
All major parts of the pumping unit(s) including casing, impeller, suction cover, wear rings, motor frame and discharge elbow shall be manufactured from gray cast iron, ASTM A-48 Class 30. Castings shall have smooth surfaces devoid of blow holes or other casting irregularities. Casing design shall be centerline discharge with a large radius on the cut water to prevent clogging. Units shall be furnished with a discharge elbow and 125 lb. flat face ANSI flange. All exposed bolts and nuts shall be 304 stainless steel. All mating surfaces of major components shall be machined and fitted with NBR O-rings where watertight sealing is required. Machining and fitting shall be such that sealing is accomplished by automatic compression of O-rings in two planes and O-ring contact is made on four surfaces without the requirement of specific torque limits. Internal and external surfaces are prepared to SPPC-VISI-SP-3-63 then coated with a zinc-chromate primer. The external surfaces are then coated with a H.B. Tnemecol 46-465 Coal Tar paint.

1. Impellers:

a. For units 2 to 5 HP, the impeller shall be radial single or multi-vane, semi-open design. It shall be dynamically balanced and shall be designed for solids handling with a long thrulet without acute turns. The inlet edge of the impeller vanes shall be angled toward the impeller periphery so as to facilitate the release of objects that might otherwise clog the pump. The 2 to 5 HP impeller design shall also include back pump out vanes to reduce the pressure and entry of foreign materials into the mechanical seal area. In addition, a lip seal shall be located behind the impeller hub to further reduce the entry of foreign materials into the seal area. Impellers shall be direct connected to the motor shaft with a slip fit, key driven, and secured with an impeller bolt. The design shall include a replaceable cast iron suction cover. The suction cover shall be designed such that it may be adjusted to maintain working clearances and hydraulic efficiencies.

b. For units 7½ to 30 HP, the impeller shall be a mixed flow multi-vane semi-open design. It shall be dynamically balanced and shall be designed for solids handling with a long thrulet without acute turns. The inlet edge of the impeller vanes shall be angled toward the impeller periphery so as to facilitate the release of objects that might otherwise clog the pump. The 7½ to 30 HP impeller design shall also include back pump out vanes to reduce the

pressure and entry of foreign materials into the mechanical seal area. In addition, a lip seal shall be located behind the impeller hub to further reduce the entry of foreign materials into the seal area. Impellers shall be direct connected to the motor shaft with a slip fit, key driven, and secured with an impeller bolt. The design shall include a replaceable cast iron suction cover. The suction cover shall be designed such that it may be adjusted to maintain working clearances and hydraulic efficiencies.

c. For high head units with 4" discharge, 40 to 60 HP shall have a radial multi-vane, enclosed impeller design. It shall be dynamically balanced and shall be designed for solids handling with a long thrulet without acute turns. The inlet edge of the impeller vanes shall be angled toward the impeller periphery so as to facilitate the release of objects that might otherwise clog the pump. A lip seal shall be located behind the impeller hub to reduce the entry of foreign materials into the mechanical seal area. Impellers shall be direct connected to the motor shaft with a slip fit, key driven, and secured with an impeller bolt. The design shall include a replaceable casing wear ring at the pump suction to maintain working clearances and hydraulic efficiencies.

d. For units 6" to 12" discharge sizes, 40 to 60 HP, the impeller shall be a mixed flow multi-vane enclosed design. It shall be dynamically balanced and shall be designed for solids handling with a long thrulet without acute turns. The inlet edge of the impeller vanes shall be angled toward the impeller periphery so as to facilitate the release of objects that might otherwise clog the pump. A lip seal shall be located behind the impeller hub to reduce the entry of foreign materials into the seal area. Impellers shall be direct connected to the motor shaft with a slip fit, key driven, and secured with an impeller bolt. The design shall include a replaceable casing wear ring at the pump suction to maintain working clearances and hydraulic efficiencies.

2. **Mechanical Seals**

a. For units 2 to 5 HP, double mechanical seals operating in an oil bath shall be provided on all units. The oil filled seal chamber shall be designed to prevent over-filling and include an anti-vortexing vane to insure proper lubrication of both seal faces. Lower face materials shall be silicon carbide, upper faces carbon vs. ceramic, NBR elastomers, and 304SS hardware. Seal system shall not rely on pumping medium for lubrication.

b. Units 7½ to 60 HP shall be designed to include a double mechanical seal in a tandem arrangement. Each seal shall be positively driven and act independently with its own spring system. The upper seal operates in an oil bath, while the lower seal is lubricated by the oil from between the shaft and the seal faces, and in contact with the pumpage. The oil filled seal chamber shall be designed to prevent over-filling and include an anti-vortexing vane to insure proper lubrication of both seal faces. Lower face materials shall be silicon carbide (tungsten carbide for 150-300 DLF 50 & 60 HP only), upper faces carbon vs. ceramic, NBR elastomers, and 304SS hardware. Seal system shall not rely on pumping medium for lubrication.

E. Motor Construction:

The pump motor shall be an air filled induction type with a squirrel cage rotor, shell type design, built to NEMA MG-1, Design B specifications. Stator windings shall be copper, insulated with moisture resistant Class F insulation, rated for 311°F. The stator shall be dipped and baked three times in Class F varnish and heat shrunk fitted into the stator housing. Rotor bars and short circuit rings shall be manufactured of cast aluminum. Motor shaft shall be one piece AISI403 for 2 to 5 HP, AISI420 for 7½ to 60 HP, rotating on two permanently lubricated ball bearings designed for a minimum B-10 life of 60,000 hours. Motor service factor shall be 1.15 and capable of up to 20 starts per hour. The motor shall be designed for continuous duty pumping at a maximum sump temperature of 104°F. Voltage and frequency tolerances shall be a maximum 10 / 5% respectively. Motor over temperature protection shall be provided by miniature thermal protectors embedded in the windings. Mechanical seal failure protection shall be provided by a mechanical float switch located in a chamber above the seal. This switch shall be comprised of a magnetic float that actuates a dry reed switch encapsulated within the stem. Should the mechanical seal fail, liquid shall be directed into the float chamber, in which the rising liquid activates the switch opening the normally closed circuit. For units 2 to 30 HP the float body and float shall be a polypropylene material with a 316SS stopper. Units 40 HP and greater, the float switch components shall be 304SS. The motor shall be non-overloading over the entire specified range of

operation and be able to operate at full load intermittently while unsubmerged without damage to the unit.

Power cable jacket shall be manufactured of an oil resistant chloroprene rubber material, designed for submerged applications. Cable shall be watertight to a depth of a least 65'. The cable entry system shall comprise of primary, secondary, and tertiary sealing methods. The primary seal shall be achieved by a cylindrical elastomeric grommet compressed between the motor cover and a 304SS washer. Secondary sealing is accomplished with a compressed O-ring made of NBR material. Compression and subsequent sealing shall preclude specific torque requirements. The system shall also include tertiary sealing to prevent leakage into the motor housing due to capillary action through the insulation if the cable is damaged or cut. The cable wires shall be cut, stripped, re-connected with a copper butt end connector, and embedded in epoxy within the cable gland. This provides a dead end for leakage through the cable insulation into the motor junction area. The cable entry system shall be the same for both the power and control cables.

F. Guide Rail system:

Design shall include two (2) 304SS schedule 40 guide rails sized to mount directly to the quick discharge connector, QDC, at the floor of the wetwell and to a guide rail bracket at the top of the wetwell below the hatch opening, (refer to project drawings). Intermediate guide brackets are recommended for rail lengths over 15 feet.

Guide rails are not part of the pump package and shall be supplied by others.

The QDC shall be manufactured of cast iron, ASTM A48 Class 30. It shall be designed to adequately support the guide rails, discharge piping, and pumping unit under both static and dynamic loading conditions with support legs that are suitable for anchoring it to the wetwell floor. The face of the inlet QDC flange shall be perpendicular to the floor of the wetwell. The discharge flange of the QDC shall conform to ANSI B16.1 Class 125.

The pump design shall include an integral self-aligning sliding bracket. Sealing of the pumping unit to the QDC shall be accomplished by a single, linear, downward motion of the pump. The entire weight of the pump unit shall be guided to and wedged tightly against the inlet flange of the QDC, making metal to metal contact with the pump discharge forming a seal without the use of bolts, gaskets or O-rings.

Lifting chain shall be galvanized (stainless steel) suitable for removing and installing the pump unit.

Dimensions

Project: Model: Chk'd: Date:

Model DLFU with Quick Discharge Connector
250DLFU, 40 TO 60HP
300DLFU, 40 TO 60HP

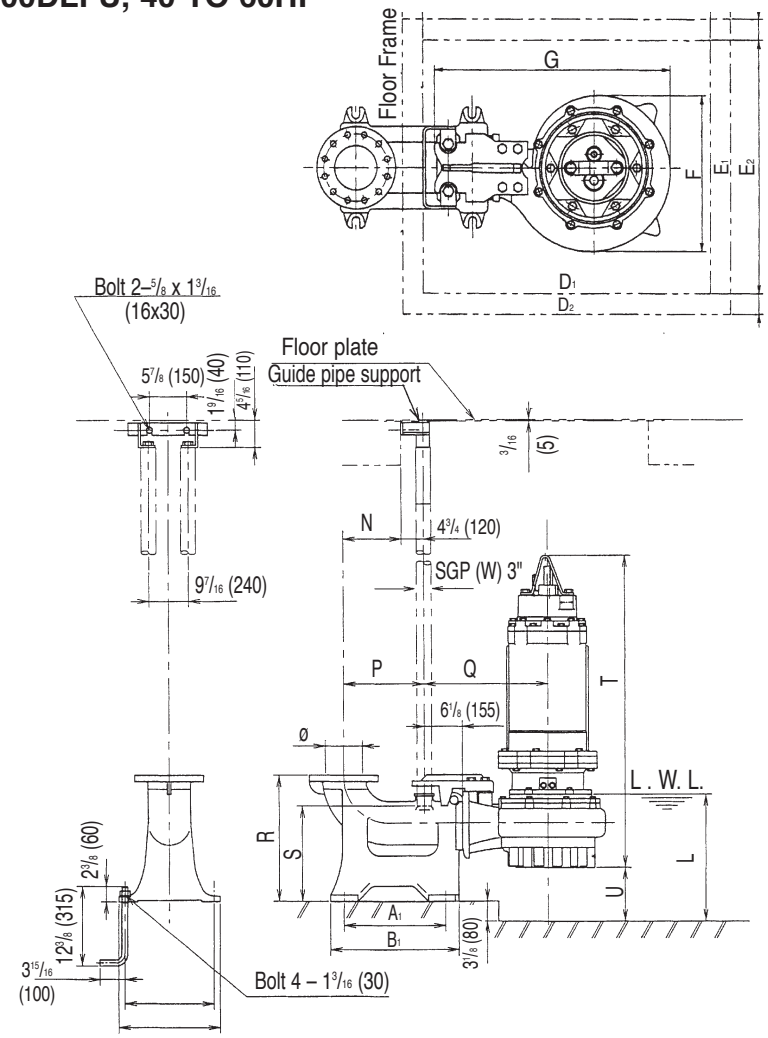

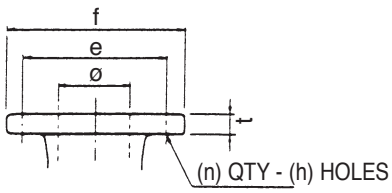

Flange (ANSI 125 PSI F.F)

inch

ø	e	f	t	n	h
10	14 1/4	16	1 3/16	12	1
12	17	19	1 1/4	12	1

mm

ø	e	f	t	n	h
250	362	406	30	12	25
300	432	483	32	12	25

Dimensions: inch

PHASE	SIZE ø	MODEL	OUTPUT kW	OUTPUT HP	QDC MODEL	PUMP & MOTOR A1	A2	B1	B2	F	G	L	N	P	Q	R	S	T	U	ACCESS HOLE D1	D2	E1	E2	WEIGHT Lb PUMP	QDC
THREE	10	250DLFU630	30	40	LL250YU	25 9/16	19 11/16	31 1/8	22 1/16	23 11/16	39 3/4	17 9/16	12 3/8	17 1/8	25	27 9/16	17 5/16	48 3/8	8 3/4	47 1/4	53 1/8	35 7/16	41 5/16	1570	344
		250DLFU637	37	50	LL250YU	25 9/16	19 11/16	31 1/8	22 1/16	23 11/16	39 3/4	18 3/8	12 3/8	17 1/8	25	27 9/16	17 5/16	51 3/4	8 3/4	47 1/4	53 1/8	35 7/16	41 5/16	1631	344
		250DLFU645	45	60	LL250YU	25 9/16	19 11/16	31 1/8	22 1/16	23 11/16	39 3/4	18 3/8	12 3/8	17 1/8	25	27 9/16	17 5/16	51 3/4	8 3/4	47 1/4	53 1/8	35 7/16	41 5/16	1713	344
	12	300DLFU630	30	40	LL300YU	26 3/4	22 13/16	32 5/16	25 3/16	27 5/16	43 7/8	20 7/8	13 9/16	18 5/16	27 3/8	31 1/2	21 5/8	50 9/16	9 15/16	51 3/16	57 1/16	39 3/8	45 1/4	1733	450
		300DLFU637	37	50	LL300YU	26 3/4	22 13/16	32 5/16	25 3/16	27 5/16	43 7/8	21 3/4	13 9/16	18 5/16	27 3/8	31 1/2	21 5/8	53 7/8	9 15/16	51 3/16	57 1/16	39 3/8	45 1/4	1795	450
		300DLFU645	45	60	LL300YU	26 3/4	22 13/16	32 5/16	25 3/16	27 5/16	43 7/8	21 3/4	13 9/16	18 5/16	27 3/8	31 1/2	21 5/8	53 7/8	9 15/16	51 3/16	57 1/16	39 3/8	45 1/4	1876	450

Dimensions: mm

PHASE	SIZE ø	MODEL	OUTPUT kW	OUTPUT HP	QDC MODEL	PUMP & MOTOR A1	A2	B1	B2	F	G	L	N	P	Q	R	S	T	U	ACCESS HOLE D1	D2	E1	E2	WEIGHT kg PUMP	QDC
THREE	250	250DLFU630	30	40	LL250YU	650	500	790	560	602	1010	446	315	435	635	700	440	1229	223	1200	1350	900	1050	712	156
		250DLFU637	37	50	LL250YU	650	500	790	560	602	1010	467	315	435	635	700	440	1314	223	1200	1350	900	1050	740	156
		250DLFU645	45	60	LL250YU	650	500	790	560	602	1010	467	315	435	635	700	440	1314	223	1200	1350	900	1050	777	156
	300	300DLFU630	30	40	LL300YU	680	580	820	640	693	1115	531	345	465	695	800	550	1284	253	1300	1450	1000	1150	786	204
		300DLFU637	37	50	LL300YU	680	580	820	640	693	1115	552	345	465	695	800	550	1369	253	1300	1450	1000	1150	814	204
		300DLFU645	45	60	LL300YU	680	580	820	640	693	1115	552	345	465	695	800	550	1369	253	1300	1450	1000	1150	851	204

Sectional View

Project: Model: Chk'd: Date:

40 to 60HP
150DLFU
200DLFU
250DLFU
300DLFU

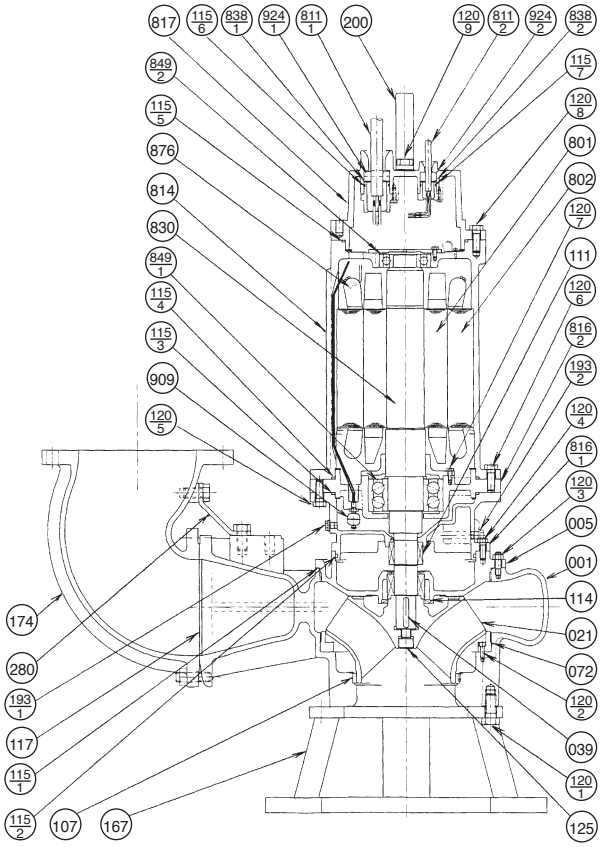

PART NO.	PART NAME	MATERIAL	ASTM, AISI CODE	NO. FOR 1 UNIT
001	CASING	CAST IRON	A48 Class 30	1
005	INTERMEDIATE CASING	CAST IRON	A48 Class 30	1
†021	IMPELLER	DUCTILE IRON	A536 60-40-18	1
039	KEY	420 STAINLESS	AISI420	1
†072	SIDE RING	CAST IRON	A48 Class 30	1
†107	WEARING RING	304 STAINLESS	AISI304	1
†111	MECHANICAL SEAL	—		1 SET
†114	OIL SEAL	RUBBER (NBR)		1
†115-1	O-RING	RUBBER (NBR)		1
†115-2	O-RING	RUBBER (NBR)		1
†115-3	O-RING	RUBBER (NBR)		1
†115-4	O-RING	RUBBER (NBR)		1
†115-5	O-RING	RUBBER (NBR)		1
†115-6	O-RING	RUBBER (NBR)		2
†115-7	O-RING	RUBBER (NBR)		1
†117	GASKET			1
120-1	BOLT	304 STAINLESS	AISI304	3/4
120-2	BOLT	304 STAINLESS	AISI304	4
120-3	BOLT	304 STAINLESS	AISI304	8
120-4	BOLT	304 STAINLESS	AISI304	4
120-5	BOLT	304 STAINLESS	AISI304	8
120-6	BOLT	304 STAINLESS	AISI304	8
120-7	BOLT	304 STAINLESS	AISI304	4
120-8	BOLT	304 STAINLESS	AISI304	6
120-9	BOLT	304 STAINLESS	AISI304	2

PART NO.	PART NAME	MATERIAL	ASTM, AISI CODE	NO. FOR 1 UNIT
125	BOLT	304 STAINLESS	AISI304	1
*167	BASE	STEEL	A283 Grade D	1
174	DISCHARGE ELBOW	CAST IRON	A48 Class 30	1
193-1	PLUG	304 STAINLESS	AISI304	1
193-2	PLUG	304 STAINLESS	AISI304	1
200	LIFTING HANGER	STEEL	A283 Grade D	1
280	ELBOW SUPPORT	STEEL	A283 Grade D	2
801	ROTOR	—		1
802	STATOR	—		1
811-1	POWER CABLE	—		2
811-2	CONTROL CABLE	—		1
814	MOTOR COVER	CAST IRON	A48 Class 30	1
816-1	BRACKET	CAST IRON	A48 Class 30	1
816-2	BRACKET	CAST IRON	A48 Class 30	1
817	BRACKET	CAST IRON	A48 Class 30	1
830	SHAFT	420J2 STAINLESS	AISI420	1
838-1	WASHER	304 STAINLESS	AISI304	2
838-2	WASHER	304 STAINLESS	AISI304	1
†849-1	BALL BEARING	—		1 SET
†849-2	BALL BEARING	—		1
876	MOTOR PROTECTOR	—		3
909	LEAKAGE DETECTOR	—		1
924-1	PACKING	RUBBER (NBR)		2
924-2	PACKING	RUBBER (NBR)		1

Motors are purchased as a complete unit
†: Recommended spare parts
*: Option for hard-piped installations

Pump Performance Datasheet

Customer	:	Quote number	:
Customer reference	:	Size	: 300DLFU630
Item number	: Default	Stages	: 1
Service	:	Based on curve number	: DLY-C610-9203
Quantity	: 1	Date last saved	: 21 Feb 2014 11:29 AM

Operating Conditions

Flow, rated	: 3,400.0 USgpm
Differential head / pressure, rated (requested)	: 15.73 ft
Differential head / pressure, rated (actual)	: 16.02 ft
Suction pressure, rated / max	: 0.00 / 0.00 psi.g
NPSH available, rated	: Ample
Frequency	: 60 Hz

Performance

Speed, rated	: 1,770 rpm
Impeller diameter, rated	: 10.47 in
Impeller diameter, maximum	: 10.79 in
Impeller diameter, minimum	: 9.96 in
Efficiency	: 41.51 %
NPSH required / margin required	: - / 0.00 ft
Ns (imp. eye flow) / Nss (imp. eye flow)	: N/A US Units
MCSF	: 480.0 USgpm
Head, maximum, rated diameter	: 51.56 ft
Head rise to shutoff	: 227.79 %
Flow, best eff. point (BEP)	: 2,292.8 USgpm
Flow ratio (rated / BEP)	: 148.29 %
Diameter ratio (rated / max)	: 97.08 %
Head ratio (rated dia / max dia)	: 72.62 %
Cq/Ch/Ce/Cn [ANSI/HI 9.6.7-2010]	: 1.00 / 1.00 / 1.00 / 1.00
Selection status	: Acceptable

Liquid

Liquid type	: Water
Additional liquid description	:
Solids diameter, max	: 0.00 in
Solids concentration, by volume	: 0.00 %
Temperature, max	: 68.00 deg F
Fluid density, rated / max	: 1.000 / 1.000 SG
Viscosity, rated	: 1.00 cP
Vapor pressure, rated	: 0.00 psi.a

Material

Material selected	: Cast Iron

Pressure Data

Maximum working pressure	: 22.32 psi.g
Maximum allowable working pressure	: N/A
Maximum allowable suction pressure	: N/A
Hydrostatic test pressure	: N/A

Driver & Power Data

Driver sizing specification	: Rated power
Margin over specification	: 0.00 %
Service factor	: 1.00
Power, hydraulic	: 13.51 hp
Power, rated	: 32.54 hp
Power, maximum, rated diameter	: 38.05 hp
Minimum recommended motor rating	: 40.00 hp / 29.83 kW (Fixed)

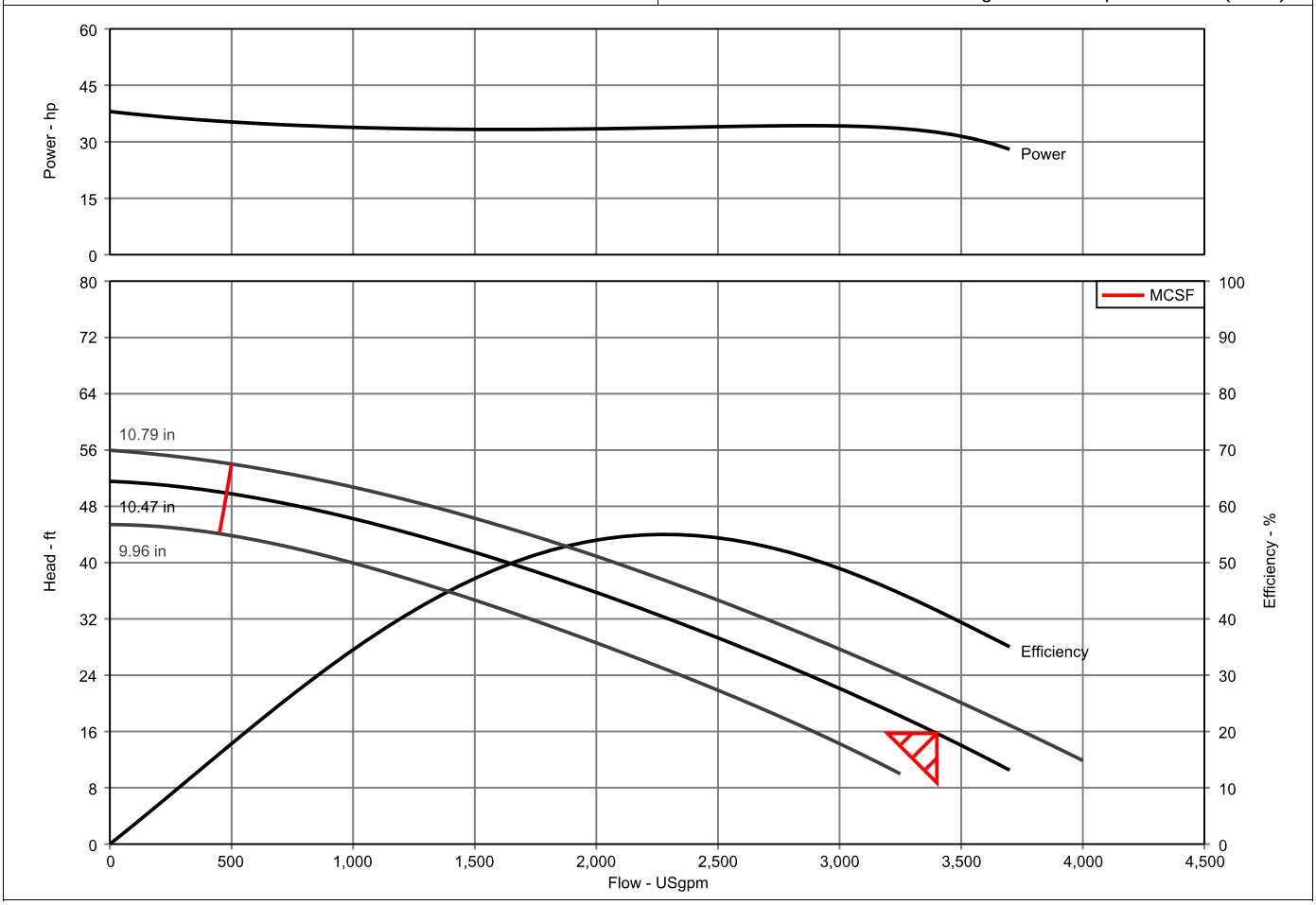

Submersible Wastewater, Sewage Pump

Model DLFU
Model DLFMU

Operating Instructions, Installation & Maintenance Manual

EBARA Fluid Handling

EBARA International Corporation

Contents

Section	Page
Safety Information and Introduction	2
Specifications	2
Pump Checks	3
Installation	3
Operation	9
Maintenance and Service	10
Thermal Protector	17
Leakage Detector	18
Warranty	19

Safety Information and Introduction

⚠ WARNING

Before handling this pump, always disconnect the power first. Do not use sparkable electrical devices or flames in a septic (gaseous) or possible septic sump.

Do not work under heavy suspended object unless there is a positive support under it to stop its fall in event of sling or hoist failure. Disregard of this warning could result in personal injury.

This pump should only be serviced by qualified or factory trained personnel.

⚠ CAUTION

This instruction manual includes necessary items for installation, operation and maintenance. Read this manual carefully to ensure correct installation, operation and maintenance.

Be sure to keep this instruction manual on hand for future reference.

Design of this EBARA pump is based on superior engineering and long experience. To prevent trouble and provide satisfactory operation and long life, it is important to understand the EBARA pump thoroughly by careful study of this manual. If any questions arise regarding this manual, please direct them to EBARA INTERNATIONAL CORPORATION.

Specifications

⚠ CAUTION

Be careful not to exceed the given specifications in the use of your products.

Check the nameplate for your pump's head (HEAD), discharge volume (CAPACITY), speed (SPEED), motor voltage and current. Other specifications are noted in the chart below.

Item		Specifications
Liquid handled	Type	Sewage, waste water, miscellaneous drain water
	Temperature	32 - 104° F
Materials	Casing	Cast iron
	Impeller	Cast iron
	Shaft	Stainless Steel
Motor type		Air filled submersible motor
Shaft seal lubrication oil		Turbine No. 32 ISO VG - 32
Maximum water depth		65 ft
Installation		with Quick Discharge Connector or floor mounted

Pump Checks

1. Check the following points upon receipt of your pump:

(1) Check the name plate to confirm that it is the pump ordered.
(2) Ensure that the pump voltage is the same as the power at your location.
(3) Check oil level at oil plug.
(4) Check that all plugs and fastening bolts are properly tightened.
(5) Check that the pump has not been damaged and the cable glands and cables are in a satisfactory condition.
(6) Check accessories and spare parts against the packing list.
(7) Check that the impeller turns smoothly by hand.

2. Precautions when operation is suspended:

(1) If operation is to be suspended for 30 days with the pump immersed in water, measure the insulation resistance of the motor.
If resistance is over 1 mega ohm, operate pump to prevent rust from developing on moving parts. Follow the instructions under OPERATION when pump operation is to be resumed.
(2) For dry storage, clean out pump and store in a dry place. Follow the instructions under INSTALLATION and OPERATION when pump operation is to be resumed.

Installation

1. Check the following before beginning installation:

⚠ WARNING

Before insulation resistance measurement, always disconnect the power first.

All electrical work should be performed by a qualified electrician and all national and local electrical codes must be observed.

⚠ CAUTION

When measuring the insulation resistance with meggar for motor windings do not test overload protection.

MINIATURE THERMAL PROTECTION (MTP) AND LEAKAGE DETECTOR (LD) ARE USED FOR MOTOR PROTECTION. MTP AND LD CABLES MUST BE INSTALLED IN CONTROL CIRCUIT.

Insulation resistance measurement:

(1) For three phase motor:
With the motor and cable (excluding the power supply connections) immersed in water, use a meggar to measure the insulation resistance between, the ground wire and each phase of the motor.

⚠ CAUTION

Measure the insulation resistance. The value should be more than I mega ohm. While making the measurement, keep the power supply cable off the ground.

Installation

2. Pump Installation

⚠ WARNING

When lifting the pump, use appropriate crane (or hoist) and lift system, check position and tightness of lift system so that weight of the pump is not UNBALANCED.
Failure to observe this precaution can result in serious accidents.
Handle the cables very carefully. If they are bent or pulled excessively, the cable and the cable entry may be damaged, resulting in insulation failure. Also, care is needed to protect cable ends against water intrusion.

⚠ CAUTION

Before installation check rotation. Correct rotation is clockwise when viewed from top of motor. Read ELECTRICAL WIRING.

1. Clean the installation area.
2. Under no circumstances should the cable be pulled while the pump is being transported or installed. Attach a chain or rope to the grip and install the pump.
3. This pump must not be installed on its side. Ensure that it is installed upright on a secure base.
4. Install the pump at a location in the tank where there is the least turbulence.
5. If there is a flow of liquid inside the tank, support the cable where appropriate (See Fig. 1).
6. Install piping so that air will not be entrapped. If piping must be installed in such a way that air pockets are unavoidable, install an air release valve wherever such air pockets are most likely to develop.
7. Do not permit end of discharge piping to be submerged, as backflow will result when the pump is shut down.
8. Non-automatic pumps (model DLFU, DLMFU) do not have an automatic operating system based on built-in floats. Do not operate the pump for a long time with the water level near the minimum operating level as the automatic cut-off switch incorporated inside the motor will be activated.

   To avoid dry operation, install an automatic operating system, as shown in Fig. 2 and maintain a safe operating water level.

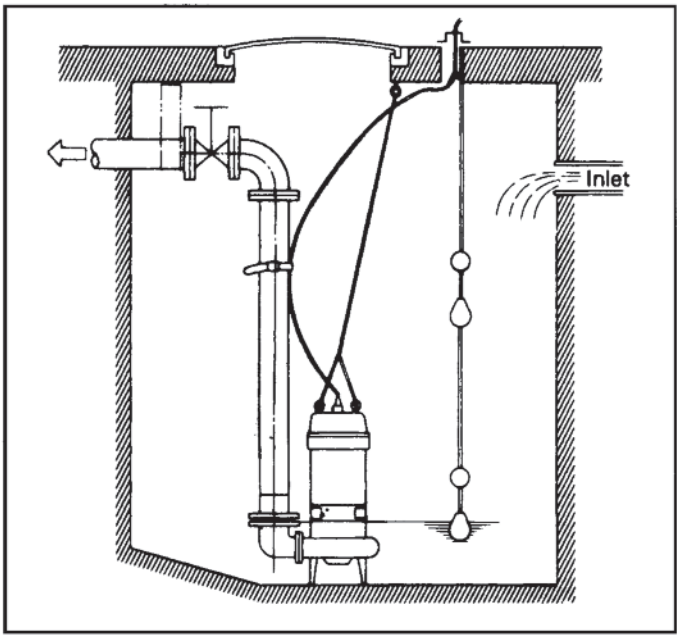

Fig. 1

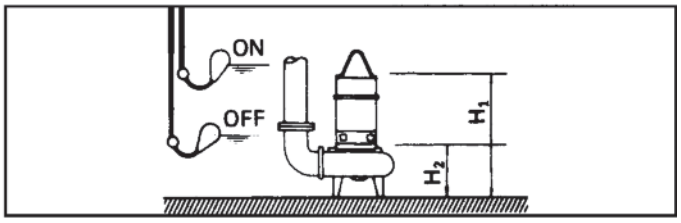

Fig. 2

H_1: Operating water level
This must be above the top of the motor.

H_2: Lowest water level (motor flange)

Installation

3. Electrical Wiring:

⚠ WARNING

Check that the power is locked off and disconnected before working on pump. All electrical work should be performed by a qualified electrician and all national and local electrical codes must be observed.

(1) Wiring

a) Wire as indicated for the appropriate start system as shown in Fig. 3.

b) Loose connections will stop the pump. Make sure all electrical connections are secure.

Output 2 to 5HP
208/230V

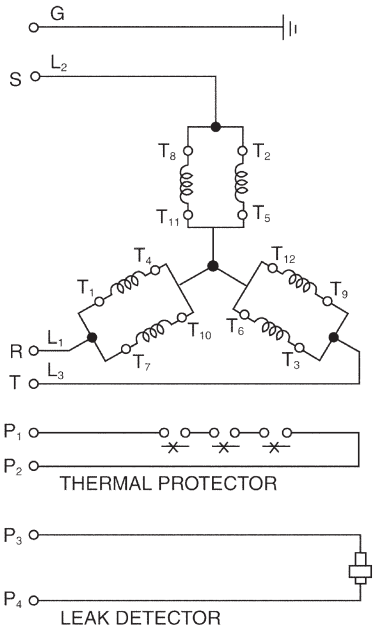

G – GRN
L_1 – RED – T_1 – T_7
L_2 – WHT – T_2 – T_8
L_3 – BLK – T_3 – T_9
T_4 – T_5 – T_6 – T_{10} – T_{11} – T_{12}
P_1 – RED
P_2 – WHT
P_3 – BLK
P_4 – OR
G – GRN

460V

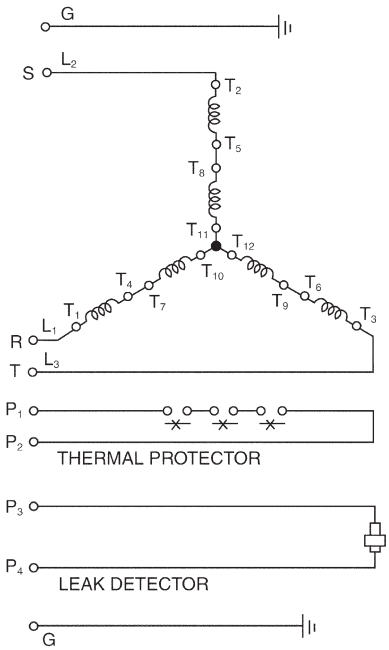

G – GRN
L_1 – RED – T_1
L_2 – WHT – T_2
L_3 – BLK – T_3
T_4 – T_7
T_5 – T_8
T_6 – T_9
T_{10} – T_{11} – T_{12}
P_1 – RED
P_2 – WHT
P_3 – BLK
P_4 – ORG
G – GRN

Installation – Electrical Wiring

Output 7.5 to 10HP

208/230V

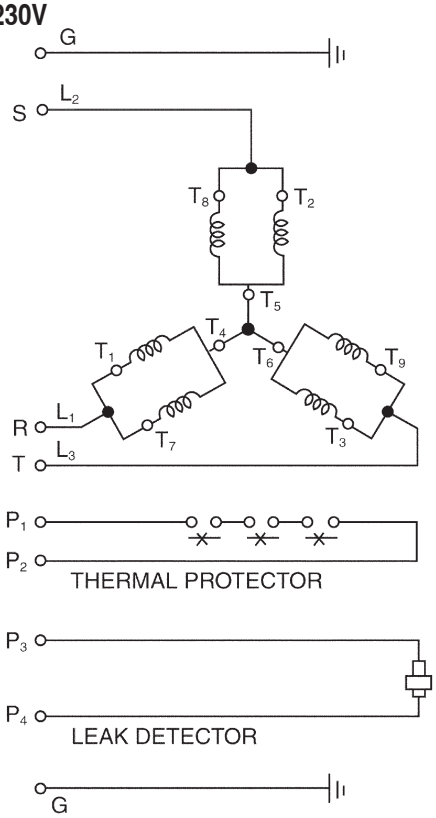

G – GRN
L_1 – RED – T_1 – T_7
L_2 – WHT – T_2 – T_8
L_3 – BLK – T_3 – T_9
T_4 – T_5 – T_6
P_1 – RED
P_2 – WHT
P_3 – BLK
P_4 – ORG
G – GRN

460V

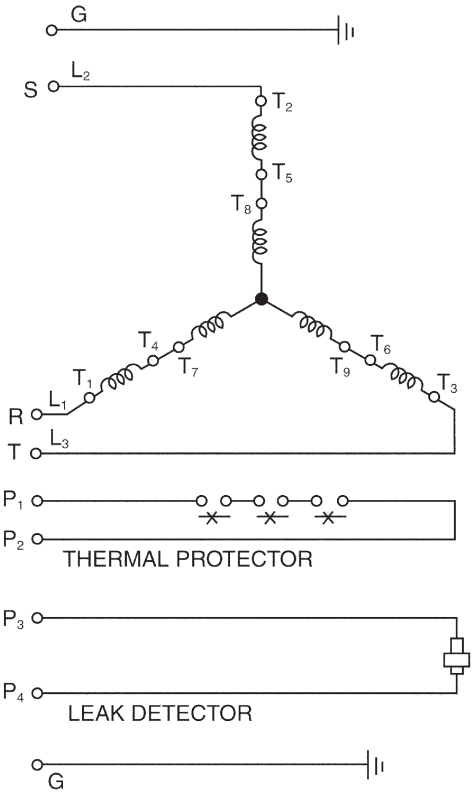

G – GRN
L_1 – RED – T_1
L_2 – WHT – T_2
L_3 – BLK – T_3
T_4 – T_7
T_5 – T_8
T_6 – T_9
P_1 – RED
P_2 – WHT
P_3 – BLK
P_4 – ORG
G – GRN

Installation – Electrical Wiring

Output 15 to 30HP

208/230V

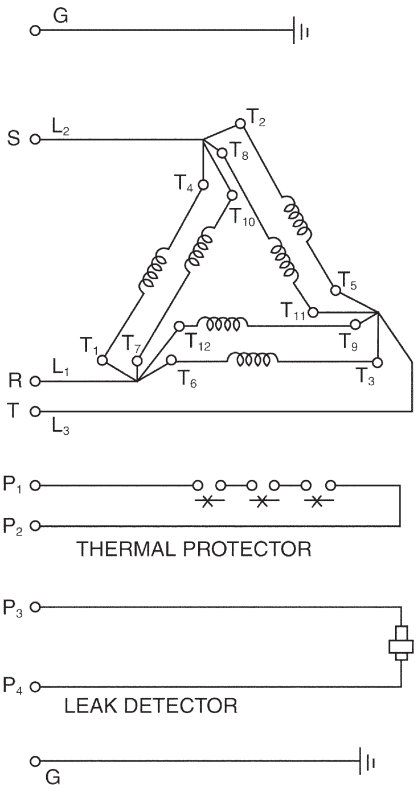

G – GRN
L_1 – RED – T_1 – T_7 – T_6 – T_{12}
L_2 – WHT – T_4 – T_8 – T_2 – T_{10}
L_3 – BLK – T_3 – T_9 – T_5 – T_{11}
P_1 – RED
P_2 – WHT
P_3 – BLK
P_4 – ORG
G – GRN

460V

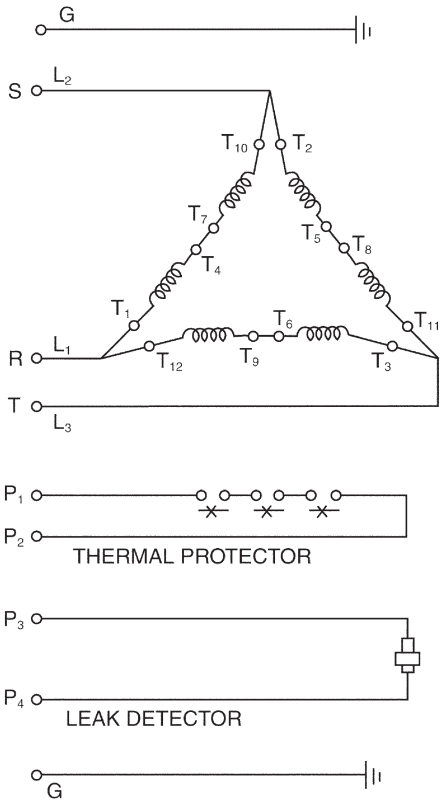

G – GRN
L_1 – RED – T_1 – T_{12}
L_2 – WHT – T_2 – T_{10}
L_3 – BLK – T_3 – T_{11}
T_4 – T_7
T_5 – T_8
T_6 – T_9
P_1 – RED
P_2 – WHT
P_3 – BLK
P_4 – ORG
G – GRN

Installation – Electrical Wiring

Output 40 to 60HP

208/230V

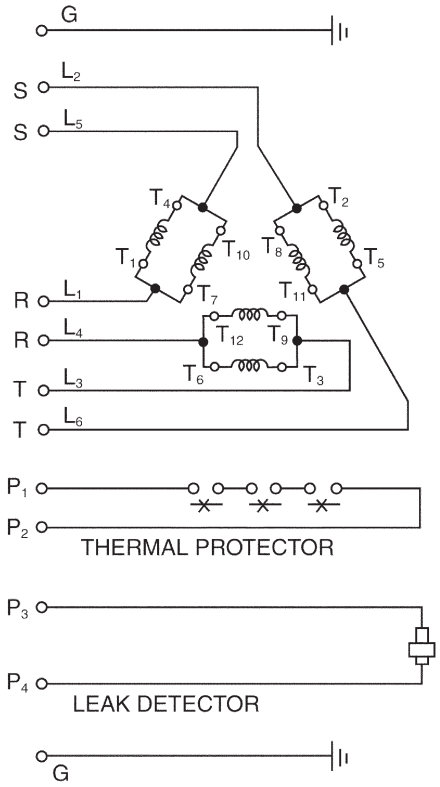

G – GRN
L_1 – RED – T_1 – T_7
L_2 – WHT – T_2 – T_8
L_3 – BLK – T_3 – T_9
L_5 – WHT – T_4 – T_{10}
L_6 – BLK – T_5 – T_{11}
L_4 – RED – T_6 – T_{12}
P_1 – RED
P_2 – WHT
P_3 – BLK
P_4 – ORG
G – GRN

460V

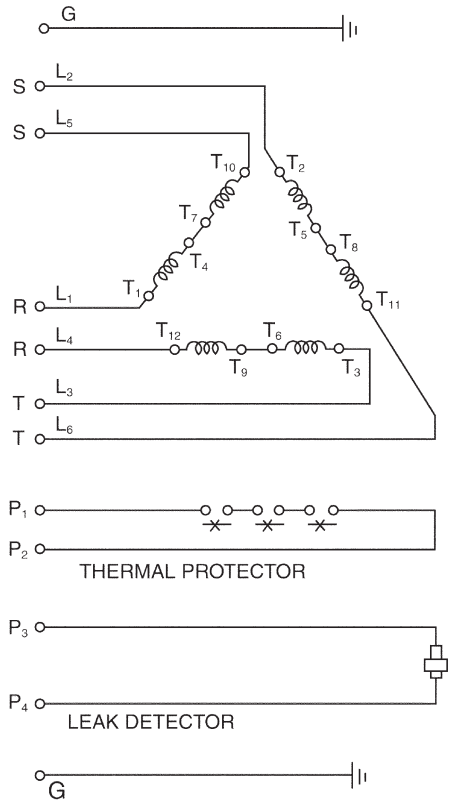

G – GRN
L_1 – RED – T_1
L_2 – WHT – T_2
L_3 – BLK – T_3
L_5 – WHT – T_{10}
L_6 – BLK – T_{11}
L_4 – RED – T_{12}
T_4– T_7
T_5 – T_8
T_6 – T_9
P_1 – RED
P_2 – WHT
P_3 – BLK
P_4 – OR
G – GRN

Installation

(2) Cable
- a) Never let the end of the cable contact water
- b) If the cable is extended, do not immerse the splice in water.
- c) Fasten the cable to the discharge piping with tape or vinyl strips.
- d) Install the cable so that it will not overheat. Overheating is caused by coiling the cable and exposing it to direct sunlight.

(3) Grounding
As shown in Fig. 4 ground the green wire (label E). Under no circumstances should the green wire be connected to the power supply.

(4) Use short circuit breakers to prevent danger of electrical shock.

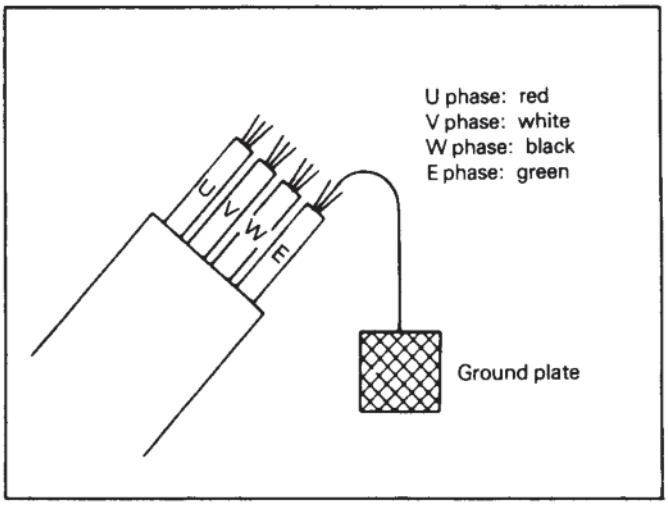

Fig. 4

Operation

1. Before starting the pump:

(1) After completing installation, measure the insulation resistance again as described in INSTALLATION.

(2) Check water level.

If the pump is operated continuously for an extended period of time in a dry condition or at the lowest water level, the thermal protector will be activated.

Constant repetition of this action will shorten pump service life. Do not start the pump again in such a situation until after the motor has completely cooled.

2. Test Operation:

⚠ CAUTION

Check rotation. Correct rotation is clockwise when viewed from top of motor. Pump should be started with gate valve closed, and then the operator should open the valve gradually.

(1) Model DLFU, DLMFU
- a) Turn the operating switch on and off a couple of times to check for normal pump start.
- b) Check the direction of rotation. If discharge volume is low or unusual sounds are heard when the pump is operating, rotation has been reversed. When this happens, reverse two of the three wires.
- c) Check amperage, voltage, and head pressure.

Maintenance and Service

⚠ WARNING

Disconnect power cable from power source before servicing unit.

Normal maintenance should be done by qualified personnel.

Check pressure, output, voltage, current, vibration, and other specifications. Unusual readings may indicate a problem requiring immediate service. Contact your local EBARA INTERNATIONAL CORPORATION representative as soon as possible.

Maintenance and Service

1. Daily inspections:

(1) Check current and ammeter fluctuation daily. If ammeter fluctuation is great, even though within the limits of pump rating, foreign matter may be clogging the pump. If the quantity of liquid discharged falls suddenly, foreign matter may be blocking the suction inlet.

2. Regular inspections:

(1) Monthly inspections

Measure the insulation resistance. The value should be more than 1 mega ohm. If resistance starts to fall rapidly even with an initial indication of over 1 mega ohm, this may be an indication of trouble and repair work is required.

(2) Every 6 months

Check the mechanical seal every six months. If you notice water mixed with the oil or cloudy texture of the oil, these may be indications of a defective mechanical seal requiring replacement. The service life of the mechanical seal can be prolonged by replacing the oil in the mechanical seal chamber once a year. When replacing the oil, lay the pump on its side, with filler plug on top as shown in Fig. 5.

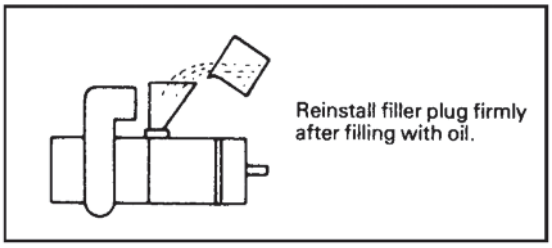

Fig. 5

Oil Capacities for DLF/DLFMU pumps

HP	Oil	HP	Oil
2	31 ozs	20	120 ozs
3	42 ozs	25	115 ozs
5	47 ozs	30	120 ozs
7 1/2	75 ozs	40	220 ozs
10	75 ozs	50	240 ozs
15	75 ozs	60	240 ozs

Table 1

(3) Preventive maintenance yearly

Conduct an overhaul of the pump annually. These intervals will reduce the possibility of future trouble.

3. Parts that will need to be replaced:

Replace the appropriate part when the following conditions are apparent.

Replaceable Part	Mechanical Seal	Oil Filter plug gasket	Lubricating oil	O-ring
Replacement guide	Whenever oil in mechanical seal chamber is clouded	Whenever oil is replaced or inspected	Whenever clouded or dirty	Whenever pump is overhauled
Frequency	Annually	Annually	Annually	Annually

Above replacement schedule is based on normal operating conditions.

Troubleshooting

⚠ CAUTION

All service should be done by factory trained or qualified personnel only.

Trouble	Cause	Remedy
Does not start. Starts, but immediately stops.	(1) Power failure (2) Large discrepancy between power source and voltage (3) Significant drop in voltage (4) Motor phase malfunction (5) Electric circuit connection faulty (6) Faulty connection of control circuit (7) Blown fuse (8) Faulty magnetic switch (9) Water is not at level indicated by float (10) Float is not in appropriate level (11) Float defective (12) Short circuit breaker is functioning (13) Foreign matter clogging pump (14) Motor burned out (15) Motor bearing broken	(1)-(3) Contact electric power company; devise counter-measures (4) Inspect connections and magnetic switch (5) Inspect electric circuit (6) Correct wiring (7) Replace with correct type of fuse (8) Replace with correct type of magnetic switch (9) Raise water level (10) Move float to an appropriate starting level (11) Repair or replace (12) Repair location of short circuit (13) Remove foreign matter (14) Repair or replace (15) Repair or replace
Operates, but stops after a while.	(1) Prolonged dry operation has activated motor protector and caused pump to stop (2) High liquid temperature has activated motor protector and caused pump to stop	(1) Raise stop water level (2) Lower liquid temperature
Does not pump. Inadequate volume.	(1) Reverse rotation (2) Significant drop in voltage (3) Operating a 60Hz pump on 50Hz (4) Discharge head is high (5) Large piping loss (6) Low operating water level causes air suction (7) Leaking from discharge piping (8) Clogging of discharge piping (9) Foreign Matter in suction inlet (10) Foreign matter clogging pump (11) Worn impeller	(1) Correct rotation (see Operation 2, (3)) (2) Contact electric power company and devise counter-measures (3) Check nameplate (4) Recalculate and adjust (5) Recalculate and adjust (6) Raise water level or lower pump (7) Inspect, repair (8) Remove foreign matter (9) Remove foreign matter (10) Disassemble and remove foreign matter (11) Replace impeller
Over current	(1) Unbalanced current and voltage (2) Significant voltage drop (3) Motor phase malfunction (4) Operating 50HZ pump on 60Hz (5) Reverse rotation (6) Low head; excessive volume of water (7) Foreign matter clogging pump (8) Motor bearing is worn or damaged	(1) Contact electric power company and devise counter-measure (2) Contact electric power company and devise counter-measure (3) Inspect connections and magnetic switch (4) Check nameplate (5) Correct rotation (see Operation 2. (3)) (6) Replace pump with low head pump (7) Disassemble and remove foreign matter (8) Replace bearing
Pump vibrates; excessive operating noise.	(1) Reverse rotation (2) Pump clogged with foreign matter (3) Piping resonates (4) Gate valve is closed too far	(1) Correct rotation (2) Disassemble and remove foreign matter (3) Improve piping (4) Open gate valve

2 to 5HP

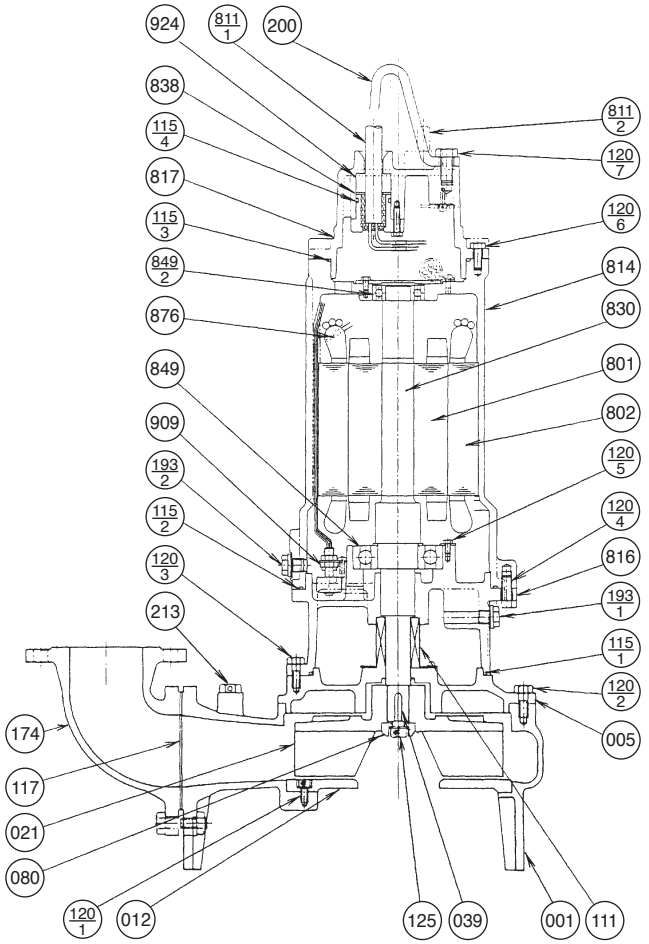

PART NO.	PART NAME	MATERIAL	ASTM, AISI CODE	NO. FOR 1 UNIT
001	CASING	CAST IRON	A48 Class 30	1
005	INTERMEDIATE CASING	CAST IRON	A48 Class 30	1
†012	SUCTION COVER	CAST IRON	A48 Class 30	1
†021	IMPELLER	CAST IRON	A48 Class 30	1
039	KEY	420 STAINLESS	AISI420	1
080	BUSHING	STEEL	A283 Grade D	1
†111	MECHANICAL SEAL	—		1 SET
†115-1	O-RING	RUBBER (NBR)		1
†115-2	O-RING	RUBBER (NBR)		1
†115-3	O-RING	RUBBER (NBR)		1
†115-4	O-RING	RUBBER (NBR)		2
†117	GASKET			1
120-1	BOLT	304 STAINLESS	AISI304	4
120-2	BOLT	304 STAINLESS	AISI304	8
120-3	BOLT	304 STAINLESS	AISI304	4
120-4	BOLT	304 STAINLESS	AISI304	4
120-5	BOLT	304 STAINLESS	AISI304	3
120-6	BOLT	304 STAINLESS	AISI304	4
120-7	BOLT	304 STAINLESS	AISI304	2
125	BOLT	304 STAINLESS	AISI304	1

PART NO.	PART NAME	MATERIAL	ASTM, AISI CODE	NO. FOR 1 UNIT
174	DISCHARGE ELBOW	CAST IRON	A48 Class 30	1
193-1	PLUG	304 STAINLESS	AISI304	1
193-2	PLUG	304 STAINLESS	AISI304	1
200	LIFTING HANGER	STEEL	A283 Grade D	1
213	AIR VENT VALVE	BRASS	B36 No. 272	1
801	ROTOR	—		1
802	STATOR	—		1
811-1	POWER CABLE	—		1
811-2	CONTROL CABLE	—		1
814	MOTOR COVER	CAST IRON	A48 Class 30	1
816	BRACKET	CAST IRON	A48 Class 30	1
817	BRACKET	CAST IRON	A48 Class 30	1
830	SHAFT	403 STAINLESS	AISI403	1
838	WASHER	304 STAINLESS	AISI304	2
†849-1	BALL BEARING	—		1
†849-2	BALL BEARING	—		1
876	MOTOR PROTECTOR	—		3
909	LEAKAGE DETECTOR	—		1
924	PACKING	RUBBER (NBR)		2

Motors are purchased as a complete unit
†: Recommended spare parts

7½ to 10HP

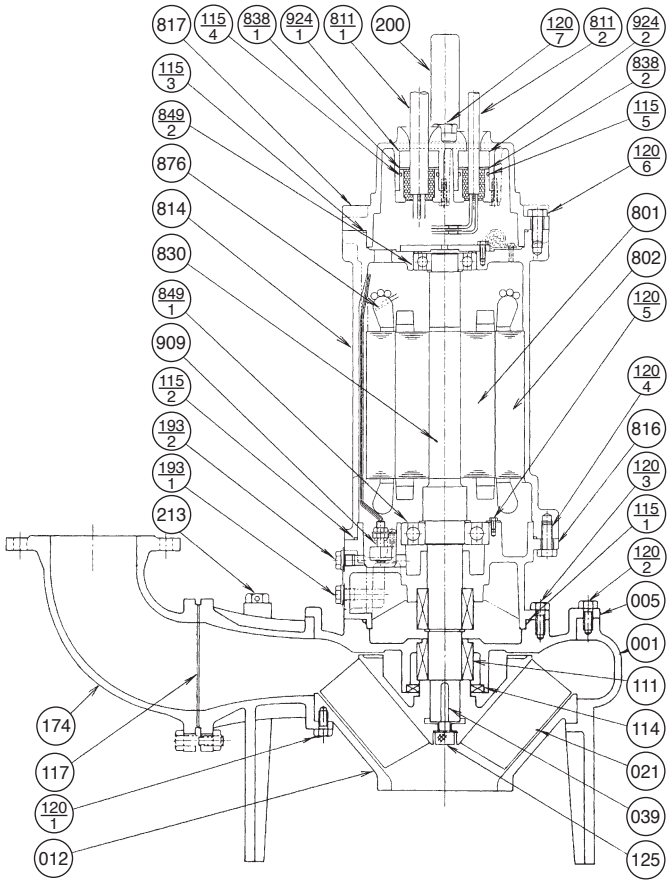

PART NO.	PART NAME	MATERIAL	ASTM, AISI CODE	NO. FOR 1 UNIT
001	CASING	CAST IRON	A48 Class 30	1
005	INTERMEDIATE CASING	CAST IRON	A48 Class 30	1
†012	SUCTION COVER	CAST IRON	A48 Class 30	1
†021	IMPELLER	CAST IRON	A48 Class 30	1
039	KEY	420 STAINLESS	AISI420	1
†111	MECHANICAL SEAL	—		1 SET
†114	OIL SEAL	RUBBER (NBR)		1
†115-1	O-RING	RUBBER (NBR)		1
†115-2	O-RING	RUBBER (NBR)		1
†115-3	O-RING	RUBBER (NBR)		1
†115-4	O-RING	RUBBER (NBR)		1
†115-5	O-RING	RUBBER (NBR)		1
†117	GASKET			1
120-1	BOLT	304 STAINLESS	AISI304	4
120-2	BOLT	304 STAINLESS	AISI304	8
120-3	BOLT	304 STAINLESS	AISI304	4
120-4	BOLT	304 STAINLESS	AISI304	6
120-5	BOLT	304 STAINLESS	AISI304	3
120-6	BOLT	304 STAINLESS	AISI304	4
120-7	BOLT	304 STAINLESS	AISI304	2
125	BOLT	304 STAINLESS	AISI304	1

PART NO.	PART NAME	MATERIAL	ASTM, AISI CODE	NO. FOR 1 UNIT
174	DISCHARGE ELBOW	CAST IRON	A48 Class 30	1
193-1	PLUG	304 STAINLESS	AISI304	1
193-2	PLUG	304 STAINLESS	AISI304	1
200	LIFTING HANGER	STEEL	A283 Grade D	1
213	AIR VENT VALVE	BRASS	B36 No. 272	1
801	ROTOR	—		1
802	STATOR	—		1
811-1	POWER CABLE	—		1
811-2	CONTROL CABLE	—		1
814	MOTOR COVER	CAST IRON	A48 Class 30	1
816	BRACKET	CAST IRON	A48 Class 30	1
817	BRACKET	CAST IRON	A48 Class 30	1
830	SHAFT	420J2 STAINLESS	AISI420	1
838-1	WASHER	304 STAINLESS	AISI304	1
838-2	WASHER	304 STAINLESS	AISI304	1
†849-1	BALL BEARING	—		1
†849-2	BALL BEARING	—		1
876	MOTOR PROTECTOR	—		3
909	LEAKAGE DETECTOR	—		1
924-1	PACKING	RUBBER (NBR)		1
924-2	PACKING	RUBBER (NBR)		1

Motors are purchased as a complete unit
†: Recommended spare parts

15 to 30HP

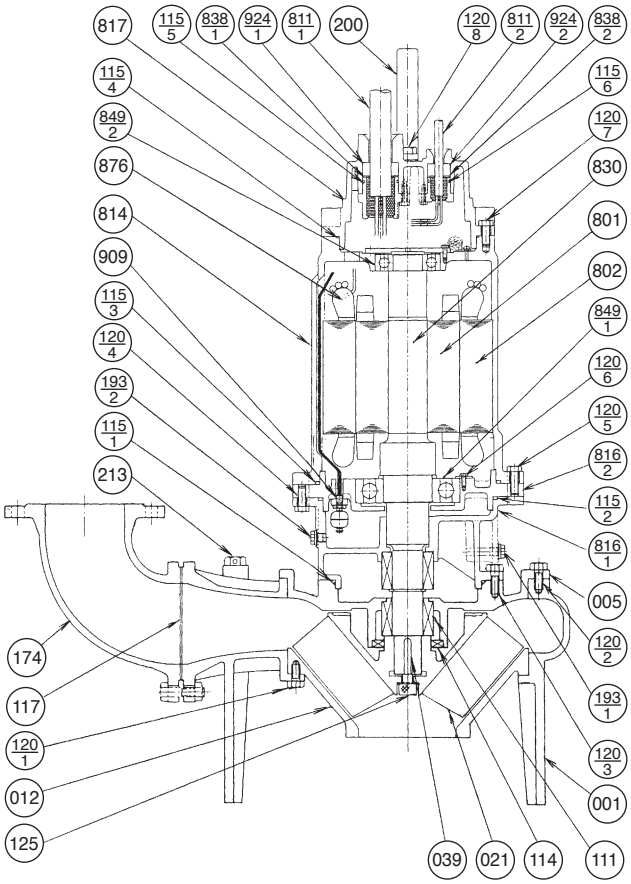

PART NO.	PART NAME	MATERIAL	ASTM, AISI CODE	NO. FOR 1 UNIT
001	CASING	CAST IRON	A48 Class 30	1
005	INTERMEDIATE CASING	CAST IRON	A48 Class 30	1
†012	SUCTION COVER	CAST IRON	A48 Class 30	1
†021	IMPELLER	CAST IRON	A48 Class 30	1
039	KEY	420 STAINLESS	AISI420	1
†111	MECHANICAL SEAL	—		1 SET
†114	OIL SEAL	RUBBER (NBR)		1
†115-1	O-RING	RUBBER (NBR)		1
†115-2	O-RING	RUBBER (NBR)		1
†115-3	O-RING	RUBBER (NBR)		1
†115-4	O-RING	RUBBER (NBR)		1
†115-5	O-RING	RUBBER (NBR)		1
†115-6	O-RING	RUBBER (NBR)		1
†117	GASKET			1
120-1	BOLT	304 STAINLESS	AISI304	4
120-2	BOLT	304 STAINLESS	AISI304	8
120-3	BOLT	304 STAINLESS	AISI304	4
120-4	BOLT	304 STAINLESS	AISI304	6
120-5	BOLT	304 STAINLESS	AISI304	6
120-6	BOLT	304 STAINLESS	AISI304	3
120-7	BOLT	304 STAINLESS	AISI304	6
120-8	BOLT	304 STAINLESS	AISI304	2
125	BOLT	304 STAINLESS	AISI304	1

PART NO.	PART NAME	MATERIAL	ASTM, AISI CODE	NO. FOR 1 UNIT
174	DISCHARGE ELBOW	CAST IRON	A48 Class 30	1
193-1	PLUG	304 STAINLESS	AISI304	1
193-2	PLUG	304 STAINLESS	AISI304	1
200	LIFTING HANGER	STEEL	A283 Grade D	1
213	AIR VENT VALVE	BRASS	B36 No. 272	1
801	ROTOR	—		1
802	STATOR	—		1
811-1	POWER CABLE	—		1
811-2	CONTROL CABLE	—		1
814	MOTOR COVER	CAST IRON	A48 Class 30	1
816-1	BRACKET	CAST IRON	A48 Class 30	1
816-2	BRACKET	CAST IRON	A48 Class 30	1
817	BRACKET	CAST IRON	A48 Class 30	1
830	SHAFT	420J2 STAINLESS	AISI420	1
838-1	WASHER	304 STAINLESS	AISI304	1
838-2	WASHER	304 STAINLESS	AISI304	1
†849-1	BALL BEARING	—		1
†849-2	BALL BEARING	—		1
876	MOTOR PROTECTOR	—		3
909	LEAKAGE DETECTOR	—		1
924-1	PACKING	RUBBER (NBR)		1
924-2	PACKING	RUBBER (NBR)		1

Motors are purchased as a complete unit
†: Recommended spare parts

40 to 60HP
100DLFU

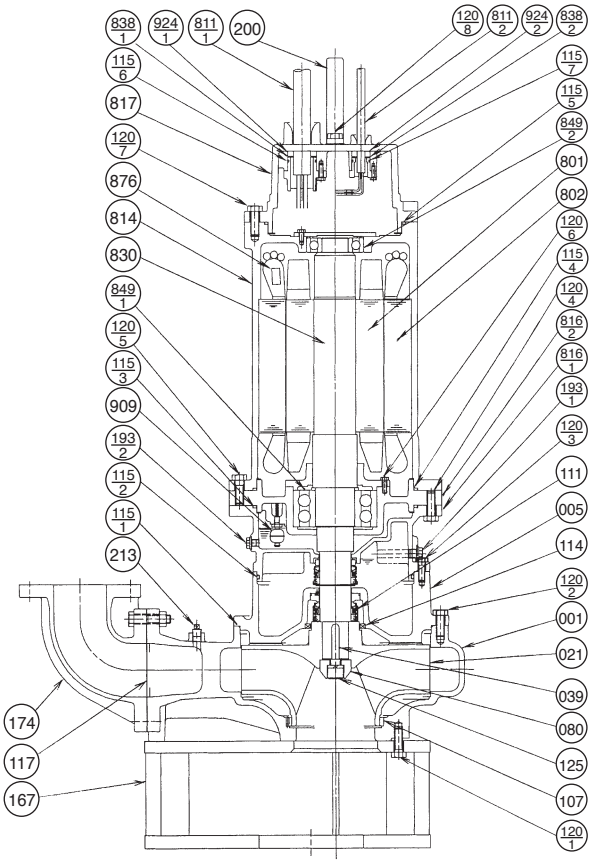

PART NO.	PART NAME	MATERIAL	ASTM, AISI CODE	NO. FOR 1 UNIT
001	CASING	CAST IRON	A48 Class 30	1
005	INTERMEDIATE CASING	CAST IRON	A48 Class 30	1
†021	IMPELLER	CAST IRON	A48 Class 30	1
039	KEY	420 STAINLESS	AISI420	1
080	BUSHING	304 STAINLESS	AISI 304	1
†107	WEARING RING	304 STAINLESS	AISI 304	1
†111	MECHANICAL SEAL	—		1 SET
†114	OIL SEAL	RUBBER (NBR)		1
†115-1	O-RING	RUBBER (NBR)		1
†115-2	O-RING	RUBBER (NBR)		1
†115-3	O-RING	RUBBER (NBR)		1
†115-4	O-RING	RUBBER (NBR)		1
†115-5	O-RING	RUBBER (NBR)		1
†115-6	O-RING	RUBBER (NBR)		2
†115-7	O-RING	RUBBER (NBR)		1
†117	GASKET			1
120-1	BOLT	304 STAINLESS	AISI304	8
120-2	BOLT	304 STAINLESS	AISI304	8
120-3	BOLT	304 STAINLESS	AISI304	8
120-4	BOLT	304 STAINLESS	AISI304	8
120-5	BOLT	304 STAINLESS	AISI304	6
120-6	BOLT	304 STAINLESS	AISI304	4
120-7	BOLT	304 STAINLESS	AISI304	6
120-8	BOLT	304 STAINLESS	AISI304	2

PART NO.	PART NAME	MATERIAL	ASTM, AISI CODE	NO. FOR 1 UNIT
125	BOLT	304 STAINLESS	AISI304	1
*167	BASE	STEEL	A283 Grade D	1
174	DISCHARGE ELBOW	CAST IRON	A48 Class 30	1
193-1	PLUG	304 STAINLESS	AISI304	1
193-2	PLUG	304 STAINLESS	AISI304	1
200	LIFTING HANGER	STEEL	A283 Grade D	1
213	AIR VENT VALVE	BRASS	B36 No. 272	1
801	ROTOR	—		1
802	STATOR	—		1
811-1	POWER CABLE	—		2
811-2	CONTROL CABLE	—		1
814	MOTOR COVER	CAST IRON	A48 Class 30	1
816-1	BRACKET	CAST IRON	A48 Class 30	1
816-2	BRACKET	CAST IRON	A48 Class 30	1
817	BRACKET	CAST IRON	A48 Class 30	1
830	SHAFT	420J2 STAINLESS	AISI420	1
838-1	WASHER	304 STAINLESS	AISI304	2
838-2	WASHER	304 STAINLESS	AISI304	1
†849-1	BALL BEARING	—		1 SET
†849-2	BALL BEARING	—		1
876	MOTOR PROTECTOR	—		3
909	LEAKAGE DETECTOR	—		1
924-1	PACKING	RUBBER (NBR)		2
924-2	PACKING	RUBBER (NBR)		1

Motors are purchased as a complete unit
†: Recommended spare parts
*: Option for hard-piped installations

40 to 60HP
150DLFU
200DLFU
250DLFU
300DLFU

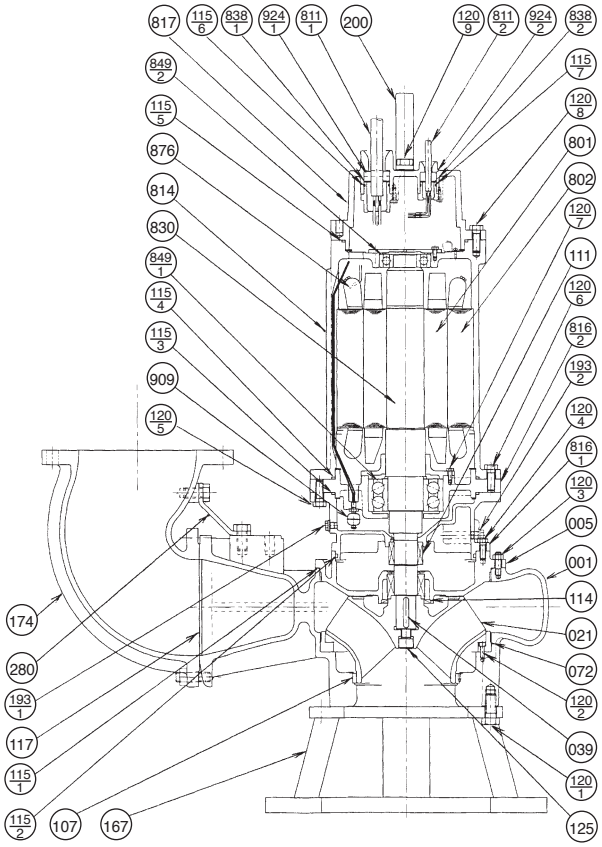

PART NO.	PART NAME	MATERIAL	ASTM, AISI CODE	NO. FOR 1 UNIT
001	CASING	CAST IRON	A48 Class 30	1
005	INTERMEDIATE CASING	CAST IRON	A48 Class 30	1
†021	IMPELLER	DUCTILE IRON	A536 60-40-18	1
039	KEY	420 STAINLESS	AISI420	1
†072	SIDE RING	CAST IRON	A48 Class 30	1
†107	WEARING RING	304 STAINLESS	AISI304	1
†111	MECHANICAL SEAL	—		1 SET
†114	OIL SEAL	RUBBER (NBR)		1
†115-1	O-RING	RUBBER (NBR)		1
†115-2	O-RING	RUBBER (NBR)		1
†115-3	O-RING	RUBBER (NBR)		1
†115-4	O-RING	RUBBER (NBR)		1
†115-5	O-RING	RUBBER (NBR)		1
†115-6	O-RING	RUBBER (NBR)		2
†115-7	O-RING	RUBBER (NBR)		1
†117	GASKET			1
120-1	BOLT	304 STAINLESS	AISI304	3/4
120-2	BOLT	304 STAINLESS	AISI304	4
120-3	BOLT	304 STAINLESS	AISI304	8
120-4	BOLT	304 STAINLESS	AISI304	4
120-5	BOLT	304 STAINLESS	AISI304	8
120-6	BOLT	304 STAINLESS	AISI304	8
120-7	BOLT	304 STAINLESS	AISI304	4
120-8	BOLT	304 STAINLESS	AISI304	6
120-9	BOLT	304 STAINLESS	AISI304	2

PART NO.	PART NAME	MATERIAL	ASTM, AISI CODE	NO. FOR 1 UNIT
125	BOLT	304 STAINLESS	AISI304	1
*167	BASE	STEEL	A283 Grade D	1
174	DISCHARGE ELBOW	CAST IRON	A48 Class 30	1
193-1	PLUG	304 STAINLESS	AISI304	1
193-2	PLUG	304 STAINLESS	AISI304	1
200	LIFTING HANGER	STEEL	A283 Grade D	1
280	ELBOW SUPPORT	STEEL	A283 Grade D	2
801	ROTOR	—		1
802	STATOR	—		1
811-1	POWER CABLE	—		2
811-2	CONTROL CABLE	—		1
814	MOTOR COVER	CAST IRON	A48 Class 30	1
816-1	BRACKET	CAST IRON	A48 Class 30	1
816-2	BRACKET	CAST IRON	A48 Class 30	1
817	BRACKET	CAST IRON	A48 Class 30	1
830	SHAFT	420J2 STAINLESS	AISI420	1
838-1	WASHER	304 STAINLESS	AISI304	2
838-2	WASHER	304 STAINLESS	AISI304	1
†849-1	BALL BEARING	—		1 SET
†849-2	BALL BEARING	—		1
876	MOTOR PROTECTOR	—		3
909	LEAKAGE DETECTOR	—		1
924-1	PACKING	RUBBER (NBR)		2
924-2	PACKING	RUBBER (NBR)		1

Motors are purchased as a complete unit
†: Recommended spare parts
*: Option for hard-piped installations

Maintenance and Service

6. Disassembly and Assembly:

> **⚠ CAUTION**
> All service should be done by factory trained or qualified personnel only.
> Be sure to cut off power source before beginning disassembly.

Please contact the following for assistance:

Ebara International Corporation
Customer Service Manager
1651 Cedar Line Drive
Rock Hill, South Carolina 29730

Thermal Protection

The motor shall be equipped with a protector such as automatic cut-off device and thermal protector. The motors described below shall incorporate Miniature Thermal Protectors (MTP) which are embedded in the windings.

When temperature of the winding raises and reaches the MTP acting point, the motor protection circuit is activated to protect motor from over heat.

1. Applicable model

Model: DGFU, DLFU, DVFU, DDLFU

2. MTP Specifications:

Model	KLIXON 9700K-66-215
Type of Contact	b (Normally-Closed contact Acting-open)
Acting Temperature	140±5 C (284±9 F)
Re-setting Temperature	85±10 C (185±18 F)
Capacity of Contact	

Voltage (V)	DC 24	AC 115	AC 230	AC 460
Amperage (A)	18	18	13	5.5

3. Installation:

MTP shall be embedded in the stator windings as shown at right –

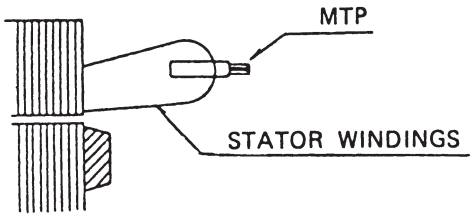

4. Construction:

Construction of the MTP is as shown below:

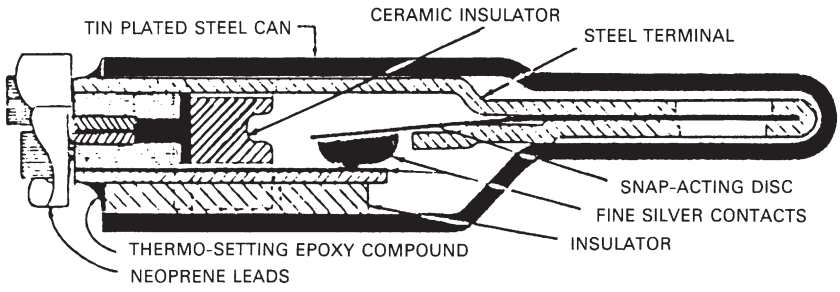

Leakage Detector

1. Construction:

Each switch has a magnet-containing float which senses the liquid level and magnetically actuates a dry reed switch encapsulated within a stem. The switch opens on rise of liquid.

2. Specifications

- Apply to 2 to 10HP

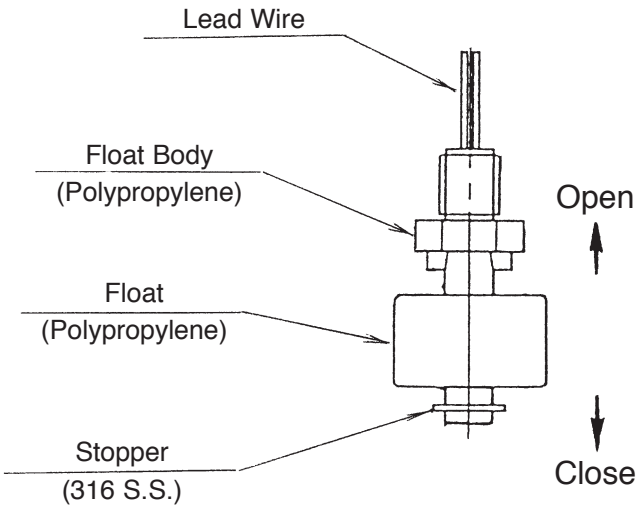

Breaking Capacity : AC50VA, DC50W
Max. Breaking Current : AC0.5A, DC0.5A
Max. Operating Voltage : AC300V, DC300V

- Apply to 15 to 60HP

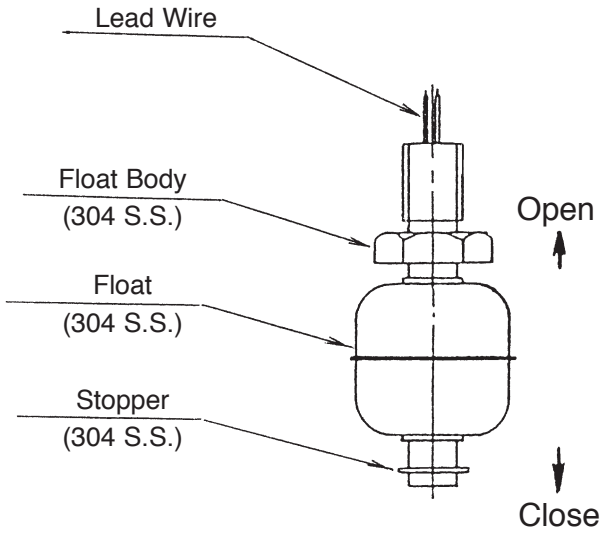

Breaking Capacity : AC12VA, DC10W
Max. Breaking Current : AC0.6A, DC0.5A
Max. Operating Voltage : AC200V, DC200V

Limited Warranty

1. **All specifications subject to change without notice**

2. **Limited warranty:**
   EIC warrants for a period of twelve months from the date of initial startup or eighteen months from the date of shipment, whichever shall first occur (the "Warranty Period") the EIC Products to be delivered hereunder against defects in material and workmanship, under normal use and service when installed, used and maintained in accordance with instructions supplied by EIC. This is EIC's sole and exclusive warranty. It applies only to EIC Products and specifically excludes Other Equipment, whether or not such Other Equipment is included in EIC's scope of supply hereunder. Such Other Equipment is warranted only by its manufacturer. If such a defect appears in EIC Products within the Warranty Period and Purchaser has given EIC immediate written notice of same, EIC will either repair the part, or at its option replace the part, by shipping a similar part F.O.B. EIC's shipping point, or at its option refund an equitable portion of the purchase price. EIC may require the return of the defective part, transportation prepaid, to establish the claim. All costs of removal, reinstallation, field labor and transportation shall be borne by the Purchaser. No allowance will be made for repairs without EIC's written consent or approval, and the Warranty Period shall not be suspended upon stopping operation for warranty repairs, nor recommence upon completion of the warranty repairs, but shall run continuously from commencement until normal expiration. Repair parts shall carry no greater warranty than the remaining balance of the underlying EIC Product into which they may be installed, expiring at the same time as said underlying warranty.

   Any descriptions of the EIC Products or Other Equipment, any specifications, and any samples, models, bulletins, or similar material used in connection with this sale are for the sole purpose of identifying the said Equipment and are not to be construed as express or implied warranties. Unless during the warranty period all repairs or replacements or parts or components for EIC Products are with EIC-approved parts or components, and all warranty service is performed by EIC or its authorized distributor or representative, the warranty responsibility of EIC shall immediately terminate.

   EIC MAKES NO OTHER WARRANTY OF ANY KIND WHATSOEVER, EXPRESS OR IMPLIED; AND ALL WARRANTIES OF MERCHANTABILITY AND FITNESS FOR A PARTICULAR PURPOSE ARE HEREBY DISCLAIMED BY EIC AND EXCLUDED FROM THESE CONDITIONS. The Purchaser's sole and exclusive remedy, whether upon warranty, contract or tort, including negligence, will be to proceed under this warranty. All liability of EIC shall terminate no later than the expiration of the Warranty Period.

Contact your dealer or supplier
for more information about other EBARA products:

EBARA Fluid Handling

1651 Cedar Line Drive • Rock Hill, SC 29730
(803) 327-5005 (t) • (803) 327-5097 (f)
www.pumpsebara.com

© 2011 EBARA International Corporation

EFH_DLFU 1011

3.03.5 RECOMMENDED MAINTENANCE

1. Safety precautions

a. Always disconnect the power and perform proper lockout/tag out procedures before servicing the unit.

b. Be aware of the risk of electrical accidents.

c. Do not ignore health hazards. Observe strict cleanliness.

d. Disconnecting power and/or performing electrical testing should be performed by a qualified person.

e. The pump must NOT be lifted out by the guide cable. Use the appropriate lifting eye and chain attached to the pump handle. The cable is only used for a guide to get the lifting eye to the chain.

2. Daily inspections

a. Check current – to be within the rated current. If ammeter fluctuation is great, even though within the limits of the pump rating, foreign matter may be clogging the pump. If the quantity of liquid discharged falls suddenly, foreign matter may be blocking the suction inlet. Document the current readings so there is a basis to compare to.

b. Check voltage – power supply voltage variation = within +- 10% of the rated voltage. Document the voltage readings so there is a basis to compare to.

c. Check for abnormal noise or vibration

d. Check and record pump runtime values if available.

e. Unusual readings or observations may indicate a problem requiring immediate service.

3. Regular inspections

a. Monthly

i. Measure the insulation resistance. Insulation resistance value should be more than 1 mega ohm (MΩ). If resistance starts to fall rapidly even with an initial indication of over 1 mega ohm, this may be an indication of trouble and repair work is required. Document what the reading is so it can be compared to the last reading.

ii. Make sure that the lifting equipment is in good condition and show no signs of abnormal wear or corrosion.

3.03.5 RECOMMENDED MAINTENANCE

iii. Replace any worn or defective lifting equipment prior to further use.

iv. Remove any foreign objects that might be attached to it.

b. Every 6 Months

i. Inspect the pump cables for signs of wear and or deterioration.

ii. Wash the pump with tap water. Pay particular attention to the impeller area, and completely remove any debris from the impeller.

iii. Inspect the pump exterior; verify that there is no damage, and that the bolts and nuts have not loosened.

iv. If the pump must be disassembled for repair due to damage or loose bolts or nuts, contact the local pump manufacturer's service office.

v. Check the mechanical seal every six months. If you notice water mixed with the oil or cloudy texture of the oil, these may be indications of a defective mechanical seal requiring replacement.

vi. CAUTION: Repair work on explosion proof motors may only be performed by approved workshops. Otherwise the "ex" approvals will no longer apply.

c. Yearly

i. The service life of the mechanical seal can be prolonged by replacing the oil in the mechanical seal chamber once a year.

ii. Refer to the actual O & M for the particular pump for addition yearly maintenance adjustments and directions.

iii. Parts that need to be replaced:

1. Mechanical Seal – Whenever oil in mechanical seal chamber is clouded.
2. Oil filler plug gasket – Whenever oil is replaced or inspected.
3. Lubricating oil – Whenever clouded or dirty
4. O-ring – Whenever pump is overhauled.

See additional maintenance specific to the manufacturer in section 3.03.

3.03.6 PUMP DATA SHEETS

PAGE IS INTENTIONALLY LEFT BLANK

Standard Duty Support Grips

Single Eye, Single Weave, Tin-Coated Bronze and Stainless Steel

IMPORTANT

Read all breaking strength, safety and technical data relating to this product. Pages V-41 to V-45.

Single Eye, Closed Mesh

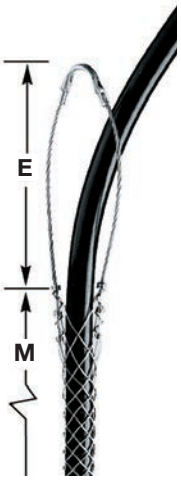

For permanent support when cable end is available to be installed through grip.

Cable Diameter Range Inches (cm)	Approx. Breaking Strength Lbs. (N)		E	M		
	Tin-Coated Bronze	Stainless Steel	Inches (cm)	Inches (cm)	Tin-Coated Bronze	Stainless Steel
.50"-.62" (1.27-1.57)	530 (2,357)	1,370 (6,094)	7" (17.78)	10" (25.40)	**02201013**	**02401013**
.63"-.74" (1.60-1.88)	790 (3,514)	2,060 (9,163)	8" (20.32)	10" (25.40)	**02201014**	**02401014**
.75"-.99" (1.90-2.51)	1,020 (4,537)	2,060 (9,163)	8" (20.32)	13" (33.02)	**02201015**	**02401015**
1.00"-1.24" (2.54-3.15)	1,610 (7,161)	2,678 (11,912)	9" (22.86)	14" (35.56)	**02201017**	**02401017**
1.25"-1.49" (3.17-3.78)	1,610 (7,161)	4,490 (19,972)	10" (25.40)	15" (38.10)	**02201018**	**02401018**
1.50"-1.74" (3.81-4.42)	1,610 (7,161)	4,492 (19,981)	12" (30.48)	17" (43.18)	**02201019**	**02401019**
1.75"-1.99" (4.44-5.05)	2,150 (9,563)	5,000 (22,241)	14" (35.56)	19" (48.26)	**02201020**	**02401020**
2.00"-2.49" (5.08-6.32)	3,260 (14,500)	8,940 (39,767)	16" (40.64)	21" (53.34)	**02201021**	**02401021**
2.50"-2.99" (6.35-7.59)	3,260 (14,500)	8,947 (39,798)	18" (45.72)	23" (58.42)	**02201022**	**02401022**
3.00"-3.49" (7.62-8.86)	4,900 (21,795)	13,420 (59,695)	21" (53.34)	25" (63.50)	**02201023**	**02401023**
3.50"-3.99" (8.89-10.13)	4,900 (21,795)	—	24" (60.96)	27" (68.58)	**02201024**	**—**

Single Eye, Split Mesh, Lace Closing

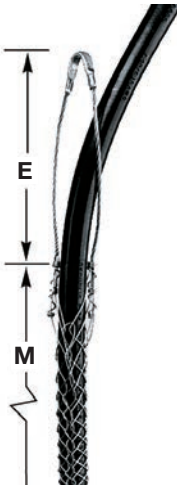

For permanent support when cable end is not available.

Cable Diameter Range Inches (cm)	Approx. Breaking Strength Lbs. (N)		E	M		
	Tin-Coated Bronze	Stainless Steel	Inches (cm)	Inches (cm)	Tin-Coated Bronze	Stainless Steel
.50"-.62" (1.27-1.57)	530 (2,357)	1,370 (6,094)	7" (17.78)	10" (25.40)	**02202013**	**02402013**
.63"-.74" (1.60-1.88)	790 (3,514)	2,066 (9,190)	8" (20.32)	10" (25.40)	**02202014**	**02402014**
.75"-.99" (1.90-2.51)	1,020 (4,537)	2,060 (9,163)	8" (20.32)	13" (33.02)	**02202015**	**02402015**
1.00"-1.24" (2.54-3.15)	1,610 (7,161)	2,670 (11,876)	9" (22.86)	14" (35.56)	**02202017**	**02402017**
1.25"-1.49" (3.17-3.78)	1,610 (7,161)	4,490 (19,972)	10" (25.40)	15" (38.10)	**02202018**	**02402018**
1.50"-1.74" (3.81-4.42)	1,610 (7,161)	4,490 (19,972)	12" (30.48)	17" (43.18)	**02202019**	**02402019**
1.75"-1.99" (4.44-5.05)	2,150 (9,563)	4,375 (19,461)	14" (35.56)	19" (48.26)	**02202020**	**02402020**
2.00"-2.49" (5.08-6.32)	3,260 (14,500)	8,947 (39,798)	16" (40.64)	21" (53.34)	**02202021**	**02402021**
2.50"-2.99" (6.35-7.59)	3,260 (14,500)	8,940 (39,767)	18" (45.72)	23" (58.42)	**02202022**	**02402022**
3.00"-3.49" (7.62-8.86)	4,900 (21,795)	13,420 (59,695)	21" (53.34)	25" (63.50)	**02202023**	**02402023**
3.50"-3.99" (8.89-10.13)	4,900 (21,795)	13,420 (59,695)	24" (60.96)	27" (68.58)	**02202024**	**02402024**

Single Eye, Split Mesh, Rod Closing

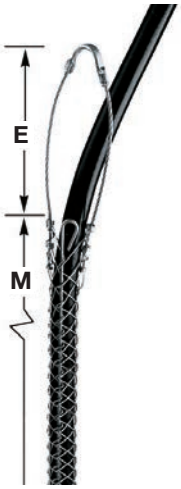

For support when cable end is not available.

Cable Diameter Range Inches (cm)	Approx. Breaking Strength Lbs. (N)		E	M		
	Tin-Coated Bronze	Stainless Steel	Inches (cm)	Inches (cm)	Tin-Coated Bronze	Stainless Steel
.50"-.62" (1.27-1.57)	790 (3,514)	1,050 (4,670)	7" (17.78)	8.5" (21.59)	**02203013**	**02403013**
.63"-.74" (1.60-1.88)	790 (3,514)	2,050 (9,119)	8" (20.32)	8.5" (21.59)	**02203014**	**02403014**
.75"-.99" (1.90-2.51)	1,020 (4,537)	2,050 (9,119)	8" (20.32)	10.5" (26.67)	**02203015**	**02403015**
1.00"-1.24" (2.54-3.15)	1,610 (7,161)	2,650 (11,788)	9" (22.86)	12.5" (31.75)	**02203017**	**02403017**
1.25"-1.49" (3.17-3.78)	1,610 (7,161)	4,500 (20,017)	10" (25.40)	14.5" (36.83)	**02203018**	**02403018**
1.50"-1.74" (3.81-4.42)	1,610 (7,161)	4,500 (20,017)	12" (30.48)	15.5" (39.37)	**02203019**	**02403019**
1.75"-1.99" (4.44-5.05)	2,150 (9,563)	6,000 (26,689)	14" (35.56)	16.5" (41.91)	**02203020**	**02403020**
2.00"-2.49" (5.08-6.32)	3,260 (14,500)	8,950 (39,812)	16" (40.64)	19.5" (49.53)	**02203021**	**02403021**
2.50"-2.99" (6.35-7.59)	3,260 (14,500)	7,750 (34,474)	18" (45.72)	21.5" (54.61)	**02203022**	**02403022**
3.00"-3.49" (7.62-8.86)	5,750 (25,576)	8,500 (37,810)	21" (53.34)	23.5" (59.69)	**02203023**	**02403023**
3.50"-3.99" (8.89-10.13)	5,750 (25,576)	—	24" (60.96)	25.5" (64.77)	**02203024**	**—**

Note: E-Eye length. M-Mesh length at nominal diameter.

Service Drop Grips

Single Eye, Tin-Coated Bronze and Stainless Steel

IMPORTANT

Read all breaking strength, safety and technical data relating to this product. Pages V-41 to V-45.

Light Duty, Single Eye, Closed Mesh, Single Weave

For permanent support when cable end is available to be installed.

Cable Diameter Range Inches (cm)	Approx. Breaking Strength Lbs. (N) Tin-Coated Bronze	Stainless Steel	E Inches (cm)	M Inches (cm)	Tin-Coated Bronze	Stainless Steel
.23"-.31" (.58-.79)	290 (1,290)	700 (3,114)	3" (7.62)	3.75" (9.52)	**02216001**	**02416001**
.29"-.37" (.74-.94)	290 (1,290)	700 (3,114)	5" (12.70)	4.25" (10.79)	**02216002**	**02416002**
.35"-.44" (.89-1.12)	500 (2,224)	850 (3,781)	5.5" (13.97)	4.75" (12.06)	**02216003**	**02416003**
.41"-.50" (1.04-1.27)	500 (2,224)	850 (3,781)	5.5" (13.97)	5" (12.70)	**02216004**	**02416004**
.46"-.56" (1.17-1.42)	660 (2,936)	850 (3,781)	6" (15.24)	5.25" (13.33)	**02216005**	**02416005**
.52"-.62" (1.32-1.57)	790 (3,514)	1,050 (4,670)	7" (17.78)	6.25" (15.87)	**02216006**	**02416006**
.58"-.68" (1.47-1.73)	790 (3,514)	1,050 (4,670)	7" (17.78)	6¹ " (16.51)	**02216007**	**02416007**
.64"-.75" (1.63-1.90)	790 (3,514)	1,050 (4,670)	7" (17.78)	6.75" (17.14)	**02216008**	**02416008**
.70"-.81" (1.78-2.06)	790 (3,514)	2,050 (9,119)	7" (17.78)	7.25" (18.41)	**02216009**	**02416009**
.75"-.87" (1.90-2.21)	1,020 (4,537)	2,050 (9,119)	8" (20.32)	8" (20.32)	**02216010**	**02416010**
.81"-.94" (2.06-2.39)	1,020 (4,537)	2,050 (9,119)	8" (20.32)	8.25" (20.95)	**02216011**	**02416011**
.87"-1.00" (2.21-2.54)	1,020 (4,537)	—	8" (20.32)	8.75" (22.22)	**02216012**	**—**
.94"-1.06" (2.39-2.69)	1,020 (4,537)	2,050 (9,119)	9" (22.86)	9" (22.86)	**02216013**	**02416013**
1.00"-1.18" (2.54-3.00)	1,020 (4,537)	2,050 (9,119)	9" (22.86)	9.5" (24.13)	**02216014**	**02416014**
1.06"-1.25" (2.69-3.17)	1,020 (4,537)	2,050 (9,119)	9" (22.86)	9.5" (24.13)	**02216015**	**02416015**

Heavy Duty, Single Eye, Closed Mesh, Multi-Weave

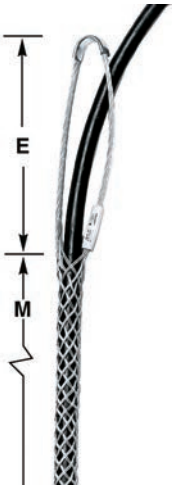

For permanent support when cable end is available to be installed.

Cable Diameter Range Inches (cm)	Approx. Breaking Strength Lbs. (N) Tin-Coated Bronze	Stainless Steel	E Inches (cm)	M Inches (cm)	Tin-Coated Bronze	Stainless Steel
.23"-.31" (.58-.79)	500 (2,224)	1,400 (6,228)	5" (12.70)	4.5" (11.43)	**02217001**	**02417001**
.29"-.37" (.74-.94)	500 (2,224)	1,150 (5,115)	5" (12.70)	5.5" (13.97)	**02217002**	**02417002**
.35"-.44" (.89-1.12)	870 (3,870)	1,700 (7,562)	6" (15.24)	6.5" (16.51)	**02217003**	**02417003**
.41"-.50" (1.04-1.27)	870 (3,870)	1,700 (7,562)	6" (15.24)	7.5" (19.05)	**02217004**	**02417004**
.46"-.56" (1.17-1.42)	1,050 (4,670)	2,100 (9,341)	6" (15.24)	8" (20.32)	**02217005**	**02417005**
.52"-.62" (1.32-1.57)	1,050 (4,670)	2,100 (9,341)	7" (17.78)	8.5" (21.59)	**02217006**	**02417006**
.58"-.68" (1.47-1.73)	1,050 (4,670)	2,100 (9,341)	7" (17.78)	9.5" (24.13)	**02217007**	**02417007**
.64"-.75" (1.63-1.90)	1,390 (6,183)	4,161 (18,509)	7" (17.78)	9.5" (24.13)	**02217008**	**02417008**
.70"-.81" (1.78-2.06)	1,390 (6,183)	4,100 (18,238)	8" (20.32)	10.5" (26.67)	**02217009**	**02417009**
.75"-.87" (1.90-2.21)	1,390 (6,183)	—	8" (20.32)	10.5" (26.67)	**02217010**	**—**
.81"-.94" (2.06-2.39)	1,390 (6,183)	—	8" (20.32)	10.5" (26.67)	**02217011**	**—**
.87"-1.00" (2.21-2.54)	1,790 (7,962)	5,350 (23,798)	8" (20.32)	11.5" (29.21)	**02217012**	**02417012**
.94"-1.06" (2.39-2.69)	1,790 (7,962)	5,300 (23,576)	9" (22.86)	12.5" (31.75)	**02217013**	**02417013**
1.00"-1.18" (2.54-3.00)	1,790 (7,962)	5,300 (23,576)	9" (22.86)	13.5" (34.29)	**02217014**	**02417014**
1.06"-1.25" (2.69-3.17)	1,790 (7,962)	5,350 (23,798)	9" (22.86)	14.5" (36.83)	**02217015**	**02417015**

Note: E-Eye length. M-Mesh length at nominal diameter.

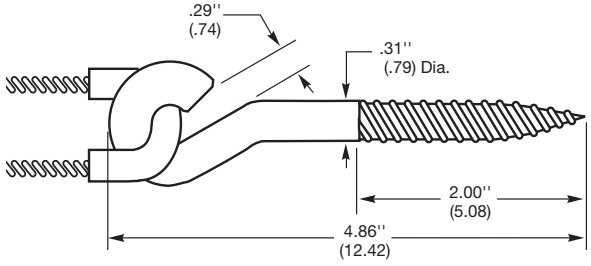

Screw Hook
Catalog Number **20303001**
Yield Strength 900 lbs (4003 N)

GRAB LINK

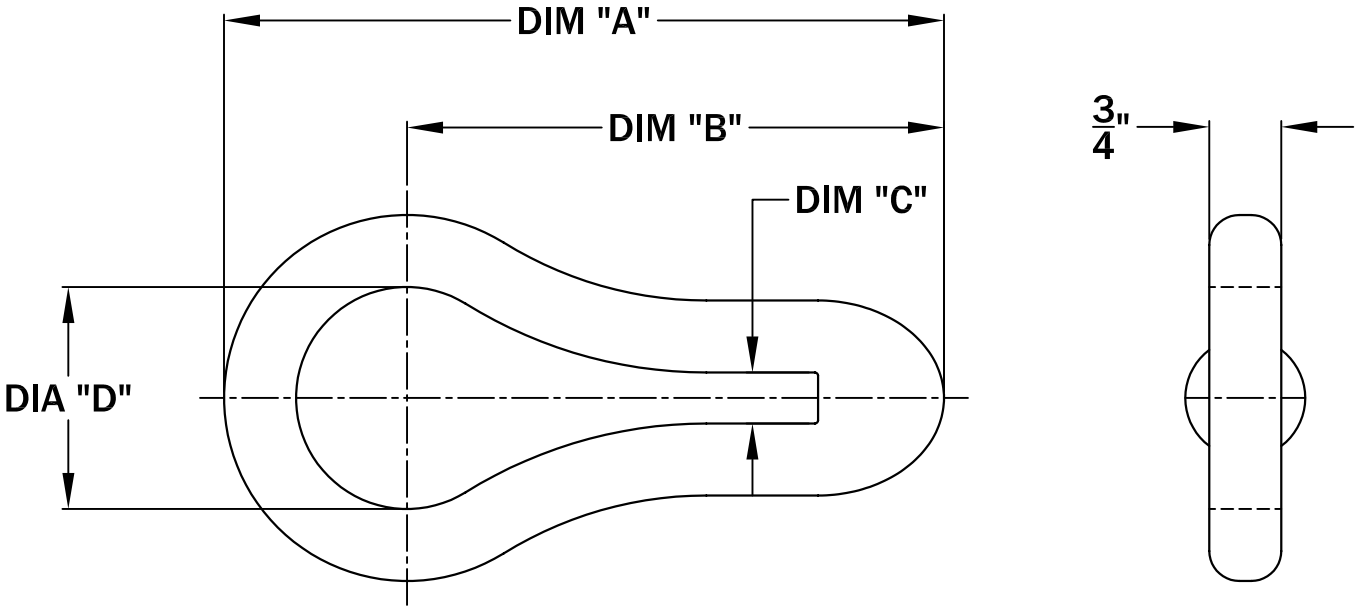

	DIM "A"	DIM "B"	DIM "C"	SAFE WORK LOAD	DIM "D"
GRABLINK	7 1/2"	5 19/32"	17/32"	6,400 Lbs	2 5/16"

ALL INFORMATION CONTAINED IN THIS DRAWING IS CONFIDENTIAL AND PROPRIETARY TO CONERY MFG, INC.

CONERY MFG INC

CHANGES	TOLERANCES	DRAWN BY	DATE
F	DECIMALS	D. MIDDLETON	01/21/08
E	.XXX = ±.005		
D	.XX = ±.010	MATERIAL SPECIFICATION:	
C	FRACTIONAL	ALLOY STEEL	
B	X/X = ±.1/64		
A	ANGLES X° = ±1/2°		

SPECIFICATION SHEET
DIMENSIONAL DATA

SCALE:	PART NO.
HALF	ALLOYED STEEL

3.04 LEVEL SENSORS

This section provides the information pertaining to the level sensing for this project.

This section is structured as follows:

3.04.1 PRIMARY LEVEL SENSOR

3.04.2 SECONDARY LEVEL SENSOR

Flush Diaphragm Submersible Liquid Level Sensor

AST4520 ISO9001:2008

The AST4520 Flush Submersible Series is the cost effective solution for level monitoring of turbulent tanks with viscous media. Approved to **UL/cUL913 Class 1 Division 1 IS, Groups C and D with an approved barrier**, the product ensures a safe, reliable source for level measurement.

The AST4520 is offered with pressure ranges from 0-2.5 to 0-15 PSIG. The AST4520 steel cage front end design allows for proper flow of media while keeping the sensor at the bottom of the tank or well. With an engraved stainless steel housing and Kynar PVDF cable, this sensor is built to handle the toughest environments.

Benefits

- Engraved 316L Housing
- Protective Steel Cage Assembly
- Kynar PVDF Cable
- Compatible with a Wide Range of Chemicals
- Ruggedly Designed for Harsh Waste Water Environments
- Suitable for Waste, Salt, Brackish, or Fresh Water Systems
- EMI/RFI and Reverse Polarity Protection
- Lightening and Surge Protection
- Competitively Priced for OEM Applications
- ABS (American Bureau of Shipping) Approved

Applications

- Lift Stations - Wastewater, Storm Water, Industrial Applications
- Food Tanks
- Viscous Media Tanks
- Heavy Oil

Environmental Data

Temperature	
Operating	-40 to 85°C (-40 to 185°F)
Storage	-40 to 100°C (-40 to 212°F)
Thermal Limits	
Compensated Range	0 to 55°C (30 to 130°F)
TC Zero	<±1.5% of FS
TC Span	<±1.5% of FS
Other	
Shock	100G, 11 msec, 1/2 sine
Vibration	10G peak, 20 to 2000 Hz.
EMI/RFI Protection:	Yes
Rating:	IP-68

Performance @ 25°C (77°F)

Accuracy*	< ±0.25% BFSL
Stability (1 year)	±0.25% FS, typical
Over Range Protection	2X Rated Pressure
Burst Pressure	5X or 1,250 PSI (whichever is less)
Pressure Cycles	> 50 Million

** Accuracy includes non-linearity, hysteresis & non-repeatability*

Electrical Data

Output	**4-20mA**
Excitation	10-28VDC
Output Impedance	>10k Ohms
Current Consumption:	20mA, typical
Bandwidth	(-3dB): DC to 250 Hz
Output Noise:	-
Zero Offset:	<±1% of FS (<±4% 1PSI)
Span Tolerance:	<±2% of FS (<±4% 1PSI)
Output Load:	0-800 Ohms@10-28VDC
Reverse Polarity Protection	Yes

American Sensor Technologies · 450 Clark Dr., Mt. Olive, NJ 07828 · phone (973) 448-1901 · fax (973) 448-1905 · email: *info@astsensors.com*

Ordering Information

AST4520	Y	00005	P	4	X	1	354

Series Type

Process Connection
Y= G1/2 with steel cage

Pressure Range
Insert 5-digit pressure range code

Pressure Unit
H= Inches H2O P= PSI

Outputs
4= 4-20mA (2 wire loop powered)

Electrical
(for wiring information visit: http://www.astsensors.com/mediacenter.php)
X= Optional Length (see options)

Wetted Material
1 = 316L / 304 SS / Kynar

Options Cable Lengths:
353 = 25 ft. (7.62 m)
354 = 50 ft. (15.24 m)
355 = 75 ft. (22.86 m)

	Gage PSIG	Pressure Range Code	Feet of Water Column @ 4°C (approx.)
AST4520	0-15	00015	34.60
	0-10	00010	23.07
	0-7.5*	00208*	17.30
	0-5	00005	11.53
	0-2.5*	00069*	5.77

*2.5 and 7.5 PSI Sensor must be ordered in inches of H_2O.

Barrier Installation

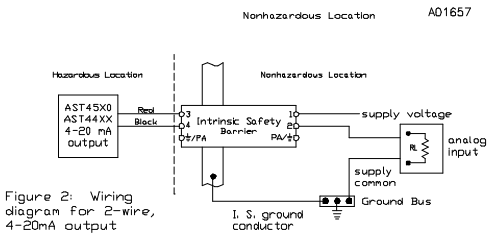

Figure 2: Wiring diagram for 2-wire, 4-20mA output

The transducers listed below are designed for installation in a Class I, Division 1, Groups C and D, Division 1 hazardous location when connected to Associated Apparatus as described in note 1.

Entity Parameters
Vmax = 28Vdc
Imax = 175mA — Imax is the total current available from the Associated Apparatus under any condition.
Ci = 0.44uf
Li = 0

Notes:
1. Associated Apparatus shall provide intrinsically safe connections which meet the following parameters.
Voc or Vt ≤ Vmax Ca ≥ Ci + Cleads
Isc or It ≤ Imax La ≥ Li + Leads

2. Control Room aparatus shall not generate in excess of 250V (Umax).

3. Installation should be in accordance with Article 504 in the National Electrical Code, ANSI/NFPA 70.

Dimensional Data

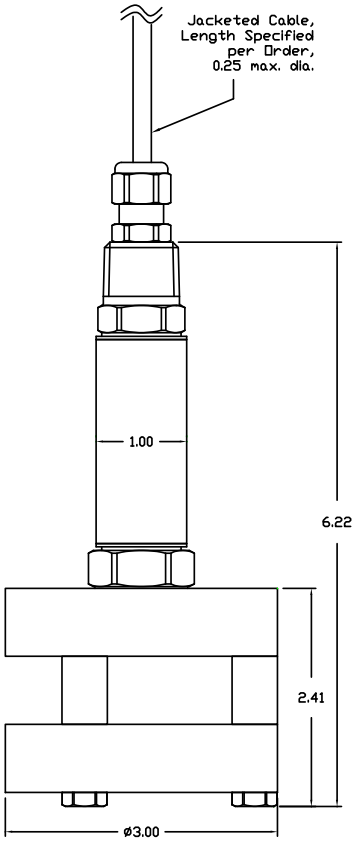

For warranty information, please visit: www.astsensors.com

© 2012 American Sensor Technologies Inc. AST4520 08/27/12.
All specifications subject to change without notice.

Level Controller MS 1

The NIVA level controller MS 1
is the ideal solution to control liquid levels with limited switching space, e. g. in:

- Pump stations
- Wells
- Pump chambers

Level Controller MS 1

The NIVA level controller MS 1 is engineered especially for use in sewage works and pumping stations in liquids heavily charged with solid matter such as raw sewage etc. Thanks to the good chemical and thermal properties our level controllers are resistant to lees, uric acid, fecal sewage water, oils, petrol, diesel oil, emulsions, alcohol, fruit acids, and even many chemicals. For use at temperatures up to 80 °C (176 °F). The MS 1 has been submitted for UL certification. Optionally the level controller MS 1 is available with EX-certificate in accordance with EC directive 94/9 (ATEX 95) – see next pages.

Available versions:

Type	Cable	Lenght (m)	Order-no.
W	TPR/PVC 3 x 0.75	5	40 000105
W	TPR/PVC 3 x 0.75	10	40 000110
W	TPR/PVC 3 x 0.75	20	40 000120
W	TPR/PVC 3 x 0.75	30	40 000130

W = Changeover (SPDT)

Other cable types and lengths are available upon request

Application:

For use in municipal, industrial, commercial and domestic applications.

Electronic connection

Connection of level controllers	Wire grey	Wire black	Wire brown
For emptying a tank	insulate	X	X
For filling a tank	X	insulate	X
Alarm high level	insulate	X	X
Alarm low level	X	insulate	X

Technical data subject to change

Technical data:

Specific weight:	0.95–1.05 or according to specification
Max. temperature:	80 °C (176 °F)
Breaking capacity:	1 mA / 4 V - 5 A / 250 V *
Switch point:	10°
Protective system:	IP 68 / 2 bar
Equipment group:	II
Cable cross section:	3 x 0.75 mm²
Height / diameter:	180 / 100 mm (7 in / 3.9 in)
Housing quality:	Polypropylene (PP)
Housing Colour:	Orange
Cable quality:	TPR/PVC
Cable colour:	Orange

* Micro-switch with gold-plated contacts especially for low currents in electronic circuits

MS 1

CE
73/23/EEC
RoHS 2002/95/EC

1mA/4V-5A/250V
μ T80
γ 0,95 - 1,05

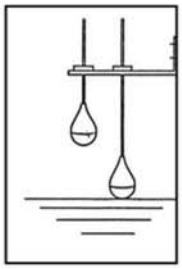

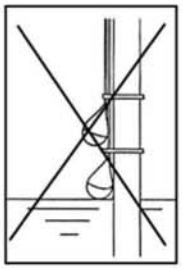

			①	②	③
GB	Connection of Level Regulators	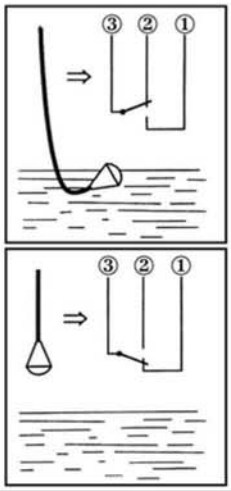	grey	black	brown
D	Anschluss der Niveauregler		grau	schwarz	braun
F	Branchement des régulateurs de niveau		gris	noir	brun
I	Collegamento regolatori di livello		grigio	nero	marrone
E	Conexión de los reguladores de nivel		gris	negro	marrón
P	Conexão dos reguladores de nível		cinzento	preto	castanho
NL	Aansluiting van de niveauregelaar		grijs	zwart	bruin
DK	Tilslutning af niveauregulator		grå	sort	brun
S	Anslutning av nivåregulatorn		grå	svart	brun
N	Forbindelse til nivåregulatoren		grå	svart	brun
FIN	Pinnansäätimen liitäntä		harmaa	musta	ruskea
RUS	подсоединение регулятора уровня		серый	чёрный	коричневый
PL	Przyłącze regulatorów poziomu		kolor szary	kolor czarny	kolor brązowy
H	A szintszabályozók csatlakoztatása		szürke	fekete	barna
CZ	Přípoj regulátorů hladiny		šedý	černý	hnědý
SK	Prípoj regulátorov hladiny		sivý	čierný	hnedý
SLO	Priključitev regulatorjev nivoja		siv	črno	rjavo
HR	Cijev za regulator razine		sivo	crni	smeđi
SCG	Cev za spravu za regulisanje nivoa		sivo	crni	smeđi
GR	Σύνδεση ρυθμιστή στάθμης		γκρίζο	μαύρο	καφέ
TR	Seviye regülatörlerinin bağlantısı		gri	siyah	kahverengi

GB	For emptying a tank	Alarm high level	insulate		
D	Zum Entleeren eines Behälters	Alarm bei hohem Flüssigkeitsstand	isolieren		
F	Pour vider un réservoir	Alarme au niveau supérieur	isoler		
I	Per lo svuotamento	Allarme di massimo livello	isolare		
E	Para vaciar un recipiente	Alarma con alto nivel de líquido	aislar		
P	Para esvaziar um reservatório	Alarme de nível máximo	isolar		
NL	Om een reservoir te legen	Alarm bij een hoog vloeistofpeil	isoleren		
DK	Til tømning af en beholder	Alarm ved høj væskeniveau	isoler		
S	För tömning av en behållare	Larm vid hög vätskenivå	isolera		
N	For å tømme en beholder	Alarm ved høyt væskenivå	isolere		
FIN	Säiliön tyhjennykseen	Ylärajahälytys	eristä	X	X
RUS	для опорожнения резервуара	сигнал тревоги при высоком уровне жидкости	изолировать		
PL	Opróżnienie pojemnika	Alarm w przypadku wysokiego poziomu cieczy	zaizolować		
H	Egy tartály ürítéséhez	Riasztás túl magas töltésszint esetén	szigeteljük		
CZ	K vyprázdnění nádrže	Poplach při vysokém stavu kapaliny	izolovat		
SK	K vyprázdneniu nádrže	Poplach pri vysokom stave kvapaliny	izolovat'		
SLO	Za praznjenje posode	Alarm pri visokem nivoju tekočine	izolirati		
HR	Za pražnjenje nekog spremnika	Alarm kod visokog stanja tekućine	izolirati		
SCG	Za pražnjenje nekog rezervoara	Alarm kod visokog stanja tećnosti	izolovati		
GR	Γ ια την εκκένωση τον περιέκτη	Αλάρμ οε πολύ νψηλή στάθμη υγρού	μόνωση		
TR	Bir hazneyi/kabı boşaltmak için	Yüksek sıvı seviyesinde alarm	İzole etmek		

GB	For filling a tank	Alarm low level		insulate	
D	Zum Füllen eines Behälters	Alarm bei niedrigem Flüssigkeitsstand		isolieren	
F	Pour remplir un réservoir	Alarme au niveau inférieur		isoler	
I	Per il riempimento	Allarme di minimo livello		isolare	
E	Para llenar un recipiente	Alarma con bajo nivel de líquido		aislar	
P	Para encher um reservatório	Alarme de nível mínimo		isolar	
NL	Om een reservoir te vullen	Alarm bij een laag vloeistofpeil		isoleren	
DK	Til fyldning af en beholder	Alarm ved lav væskeniveau		isoler	
S	För fyllning av en behållare	Larm vid låg vätskenivå		isolera	
N	For å fylle en beholder	Alarm ved lavt væskenivå		isolere	
FIN	Säiliön täyttämiseen	Alarajahälytys	X	eristä	X
RUS	для наполнения резервуара	сигнал тревоги при низком уровне жидкости		изолировать	
PL	Napełnienie pojemnika	Alarm w przypadku niskiego poziomu cieczy		zaizolować	
H	Egy tartály töltéséhez	Riasztás túl alacsony töltésszint esetén		szigeteljük	
CZ	K naplnění nádrže	Poplach při nízkém stavu kapaliny		izolovat	
SK	K naplneniu nádrže	Poplach pri nízkom stave kvapaliny		izolovat'	
SLO	Za polnjenje posode	Alarm pri nizkem nivoju tekočine		izolirati	
HR	Za punjenje nekog spremnika	Alarm kod niskog stanja tekućine		izolirati	
SCG	Za punjenje nekog rezervoara	Alarm kod niskog stanja tećnosti		izolovati	
GR	Γ ια την πλήρωση τον περιέκτη	Αλάρμ οε πολύ χαμηλή στάθμη υγρού		μόνωση	
TR	Bir hayneyi/kabı doldurmak için	Düşük sıvı seviyesinde alarm		İzole etmek	

11 2126

END

OF

SECTION

4. ELECTRICAL

This section includes all drawings, schematics, data sheets, and user manuals related to the control panel and electrical components.

This section is structured as follows:

4.01 CONTROL PANEL DRAWING

4.02 ELECTRICAL SCHEMATICS

4.03 CONTROL PANEL DATA SHEETS

4.04 INSTRUCTIONS FOR CONDUIT ENTRY

4.01 CONTROL PANEL DRAWING

PAGE IS INTENTIONALLY LEFT BLANK

DRAWING NUMBER
P4801

60" X 48" X 12" PAINTED STEEL NEMA 4 ENCLOSURE WITH INNER DOORS

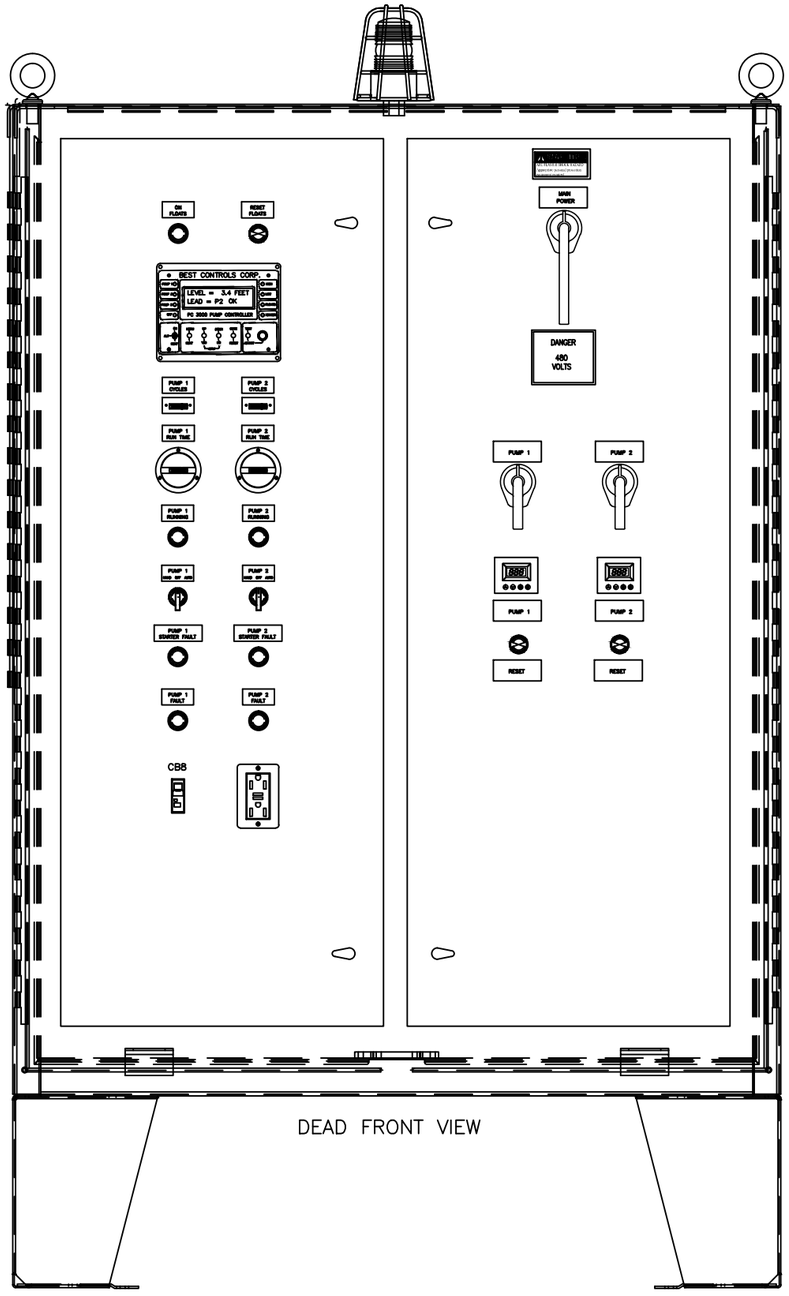

DEAD FRONT VIEW

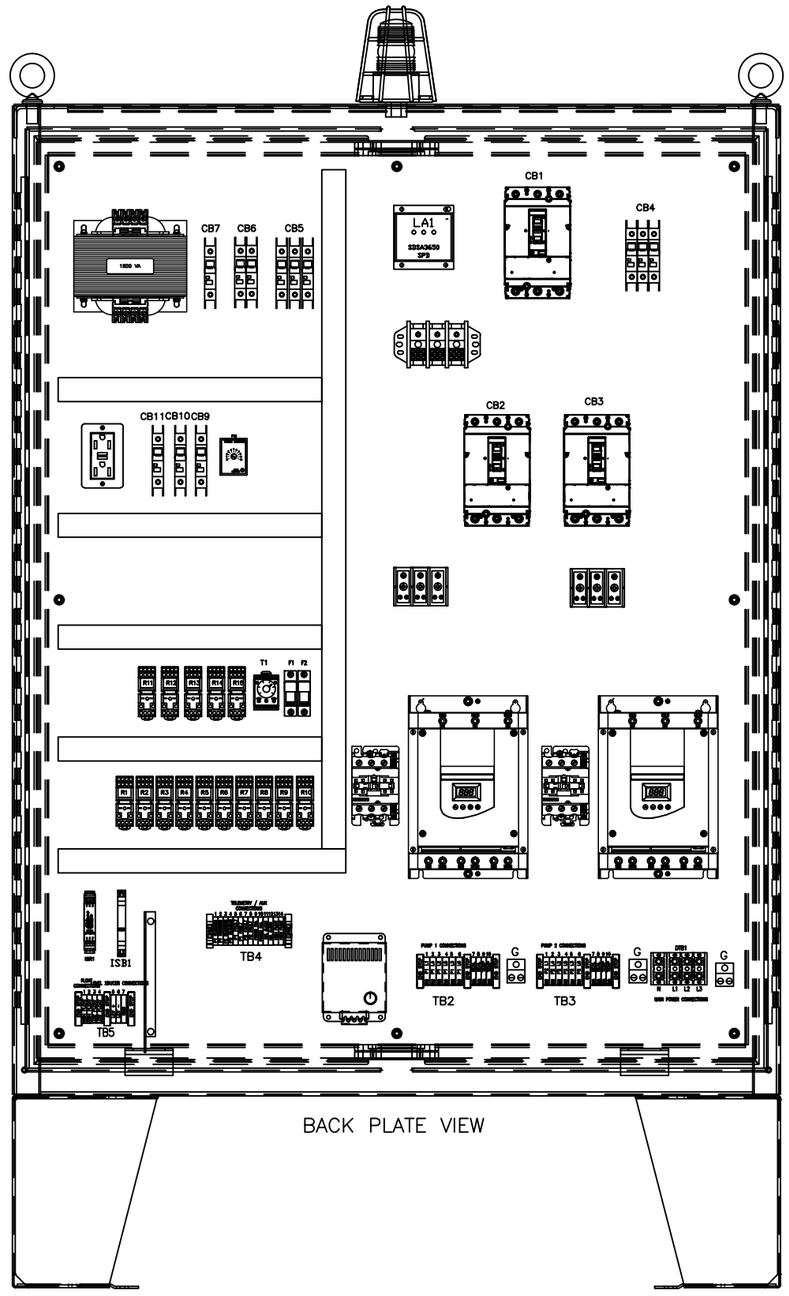

BACK PLATE VIEW

REV. LET.	REVISIONS	DATE	REV OR APPD BY
A			

REV. LET.	REVISIONS	DATE	REV OR APPD BY

THIS DRAWING IS THE PROPERTY OF ROMTEC, INC. AND CONTAINS PROPRIETARY AND CONFIDENTIAL INFORMATION WHICH MUST NOT BE DUPLICATED, USED OR DISCLOSED OTHER THAN EXPRESSLY AUTHORIZED BY ROMTEC, INC.

ROMTEC UTILITIES, INC. ROSEBURG, OREGON

SALES REP: ROMTEC, INC.
CUSTOMER:
PHONE: 541-496-9678
ROMTEC UTILITIES, INC.

DATE 3/10/14
DESIGN WDB
DRAWN
CHK'D
APPR'D
SHEET 6 OF 6

REV. 1
HP 30
SIZE C

PROJECT NAME: INDIAN SPRINGS STORMWATER
FILE NO:
CONFIG NO:
ADDER NO:
PROJECT NUMBER
DRAWING NUMBER P4801

DRAWING NUMBER
P4801

4.02 ELECTRICAL SCHEMATICS

PAGE IS INTENTIONALLY LEFT BLANK

DRAWING NUMBER
P4801

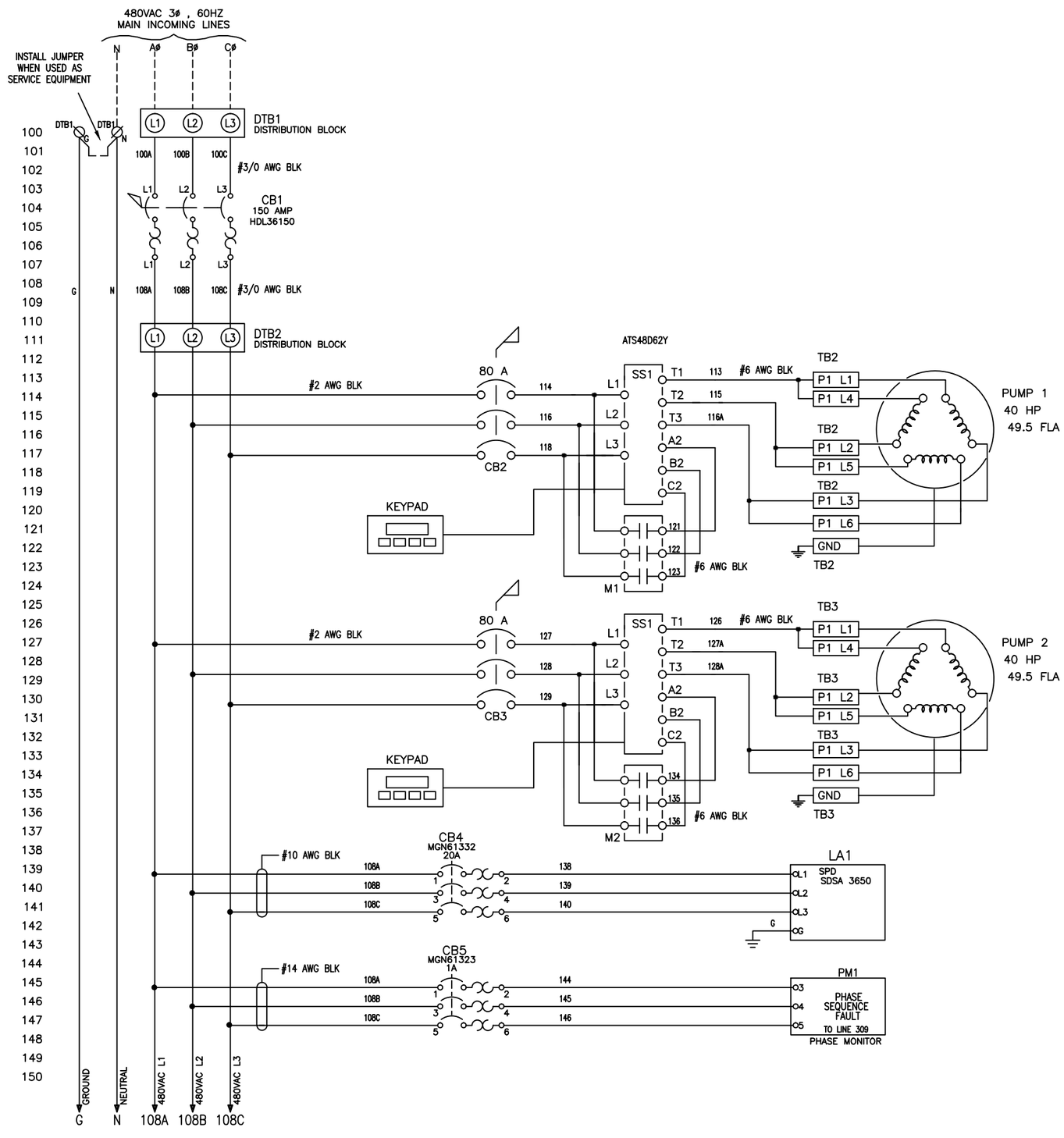

REV. LET.	REVISIONS	DATE	REV OR APPD BY
A			KAS

THIS DRAWING IS THE PROPERTY OF ROMTEC, INC. AND CONTAINS PROPRIETARY AND CONFIDENTIAL INFORMATION WHICH MUST NOT BE DUPLICATED, USED OR DISCLOSED OTHER THAN EXPRESSLY AUTHORIZED BY ROMTEC, INC.

SALES REP: ROMTEC, INC.
CUSTOMER:

PHONE: 541-496-9678
ROMTEC UTILITIES, INC.
ROMTEC UTILITIES, INC. ROSEBURG, OREGON

DATE 3/10/14
DESIGN WDB
DRAWN
CHK'D
APPR'D
SHEET 1 OF 5

REV. 1
HP 40
SIZE C

PROJECT NAME: INDIAN SPRINGS STORMWATER
FILE NO:
CONFIG NO:
ADDER NO:
PROJECT NUMBER
DRAWING NUMBER P4801

DRAWING NUMBER
P4801

DRAWING NUMBER
P4801

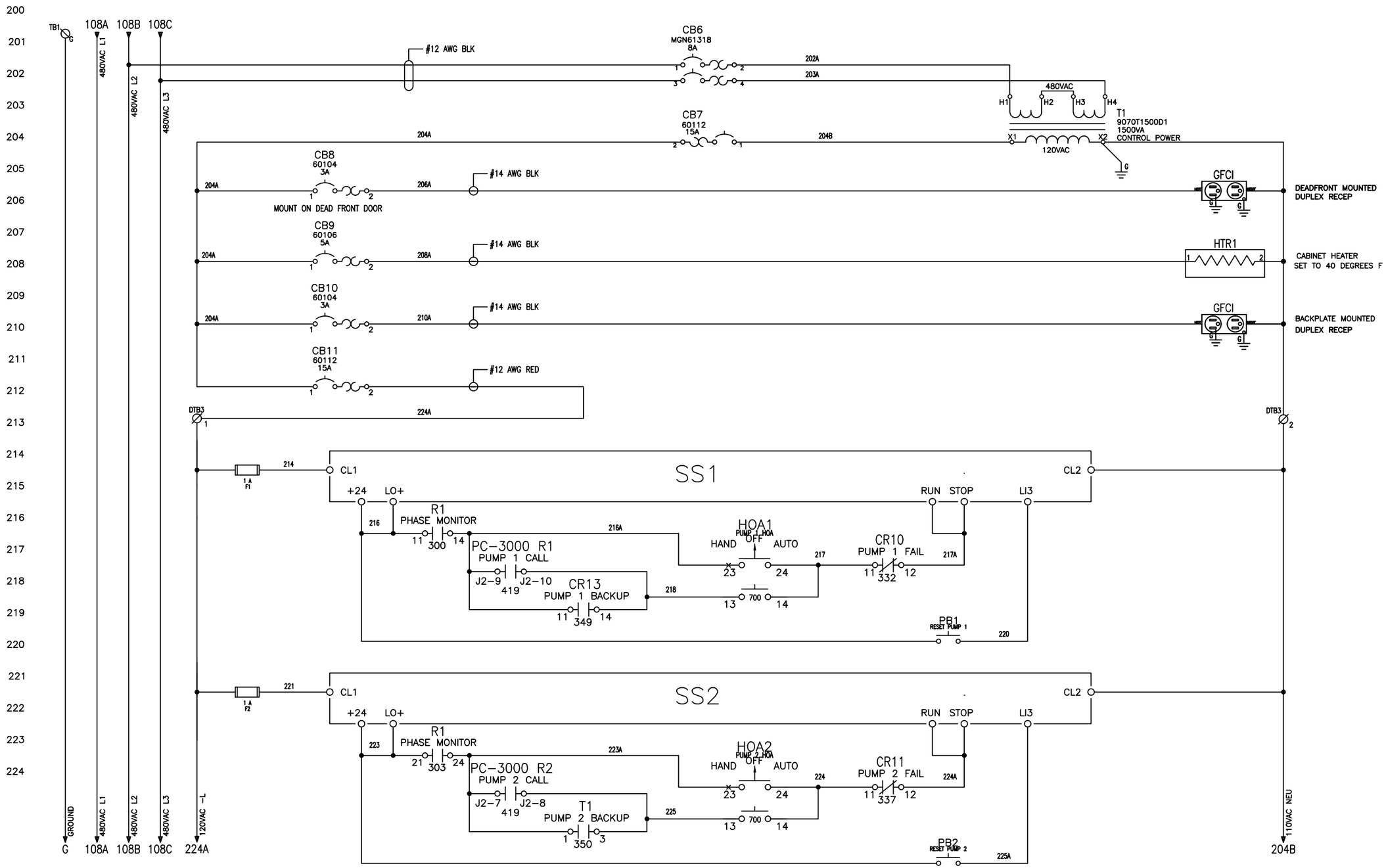

REV. LET.	REVISIONS	DATE	REV OR APPD BY	REV. LET.	REVISIONS	DATE	REV OR APPD BY

THIS DRAWING IS THE PROPERTY OF ROMTEC, INC. AND CONTAINS PROPRIETARY AND CONFIDENTIAL INFORMATION WHICH MUST NOT BE DUPLICATED, USED OR DISCLOSED OTHER THAN EXPRESSLY AUTHORIZED BY ROMTEC, INC.

SALES REP: ROMTEC, INC.
CUSTOMER:
PHONE: 541-496-9678

ROMTEC UTILITIES, INC.
ROMTEC UTILITIES, INC. ROSEBURG, OREGON

DATE 3/10/14
DESIGN WDB
DRAWN
CHK'D
APPR'D
SHEET 2 OF 5

REV. 1
HP 40
SIZE C

PROJECT NAME: INDIAN SPRINGS STORMWATER
FILE NO:
CONFIG NO:
ADDER NO:
PROJECT NUMBER
DRAWING NUMBER P4801

DRAWING NUMBER
P4801

DRAWING NUMBER P4801

224A from 200 120VAC–L

204B 200 120VAC–N

PM1 PHASE MONITOR 1 208 8 — 300 — CR1 A1 A2 — POWER MONITOR 316,323 409,448

SS1 R2 P1 END START R2C R2A — 302 — CR2 A1 A2 — PUMP 1 RUNNING 303

CR2 PUMP 1 RUNNING 11 302 14 — 303 — M1 A1 A2 — P1 BYPASS 448

ETM1 — PUMP 1 ETM

CC1 — P1 CYCLES

PL1 G X1 X2 — PUMP 1 RUN

SS1 R1 P1 SS FAULT R1C R1A — 310 — CR3 A1 A2 — P1 SS FAULT 312,334

CR3 P1 SS FAULT 11 311 12 — 312 — PL2 R X1 X2 — P1 SS FAULT

SS2 R2 P2 END START R2C R2A — 314 — CR4 A1 A2 — PUMP 2 RUNNING 316

CR4 PUMP 2 RUNNING 11 314 14 — 316 — M2 A1 A2 — P2 BYPASS 448

ETM2 — PUMP 2 ETM

CC2 — P2 CYCLES

PL3 G X1 X2 — PUMP 2 RUN

SS2 R1 P2 SS FAULT R1C R1A — 323 — CR5 A1 A2 — P2 SS FAULT 324,339

CR5 P2 SS FAULT 11 323 12 — 324 — PL4 R X1 X2 — P2 SS FAULT

120VAC–L to 326 → 224A

120VAC–N to 326 → 204B

224A from 300 120VAC–L

PUMP 1 SEAL SENSOR TB2 7 — 326 — TB2 8 — CR6 P1 SEAL OK A1 A2 — NC 332,426

PUMP 2 SEAL SENSOR TB3 7 — 327 — TB3 8 — CR7 P2 SEAL OK A1 A2 — NO 327,429,428

PUMP 1 TEMP SENSOR TB2 9 — 329 — TB2 10 — CR8 P1 TEMP OK A1 A2 — NO 430 NC 333

PUMP 2 TEMP SENSOR TB3 9 — 331 — TB3 10 — CR9 P2 TEMP OK A1 A2 — NO 431 NC 338

CR6 P1 SEAL OK 11 326 12 — 332

CR8 P1 TEMP OK 11 329 12

CR3 P1 SS FAULT 21 311 22 — 334

CR10 P1 PUMP FAIL A1 A2 — NO 405,432,448 NC 218 149,432,448

PL5 21 22 X1 R X2 13 14 — 218 — PUMP 1 FAULT LIGHT

CR7 P2 SEAL OK 11 327 12 — 337

CR9 P2 TEMP OK 11 331 12

CR5 P2 SS FAULT 21 323 22 — 339

CR11 P2 PUMP FAIL A1 A2 — NO 406,434,448 NC 225

PL6 21 22 X1 R X2 13 14 — PUMP 2 FAULT LIGHT

ISR1 TURCK IM1–22EX–R

TB5 1 HIGH LEVEL FLOAT TB5 2 — 344 BLUE/WHITE — 4 — ISR1A — 7 — 345A — CR12 A1 A2 — NO 349,437,448 — HIGH LEVEL

TB5 1 BLUE/WHITE — 345 — 1

TB5 3 OFF FLOAT TB5 4 — 346 BLUE/WHITE — 5 — ISR1B — 8 — 347A

TB5 3 BLUE/WHITE — 347 — 2 — 9

Intrinsically Safe Field Wiring Terminals
WARNING – Substitution of Components May Impair Intrinsic Safety

ISOLATION BARRIER

CR12 HIGH LEVEL 11 345 14 — 349 — CR13 A1 A2 — P1 BACKUP 219,350,400

CR13 P1 BACKUP 21 349 24 — T1 7 2 — P2 BACKUP NO 225

120VAC–L to 400 → 224A

120VAC–N to 400 → 204B

REV. LET.	REVISIONS	DATE	REV OR APPD BY

THIS DRAWING IS THE PROPERTY OF ROMTEC, INC. AND CONTAINS PROPRIETARY AND CONFIDENTIAL INFORMATION WHICH MUST NOT BE DUPLICATED, USED OR DISCLOSED OTHER THAN EXPRESSLY AUTHORIZED BY ROMTEC, INC.

SALES REP: ROMTEC, INC.
CUSTOMER:
PHONE: 541-496-9678

ROMTEC UTILITIES, INC.

ROMTEC UTILITIES, INC. ROSEBURG, OREGON

DATE 3/10/14
DESIGN WDB
DRAWN
CHK'D
APPR'D
SHEET 3 OF 8

REV. 1
HP 40
SIZE C

PROJECT NAME: INDIAN SPRINGS STORMWATER
FILE NO:
CONFIG NO:
ADDER NO:
PROJECT NUMBER
DRAWING NUMBER P4801

DRAWING NUMBER P4801

DRAWING NUMBER
P4801

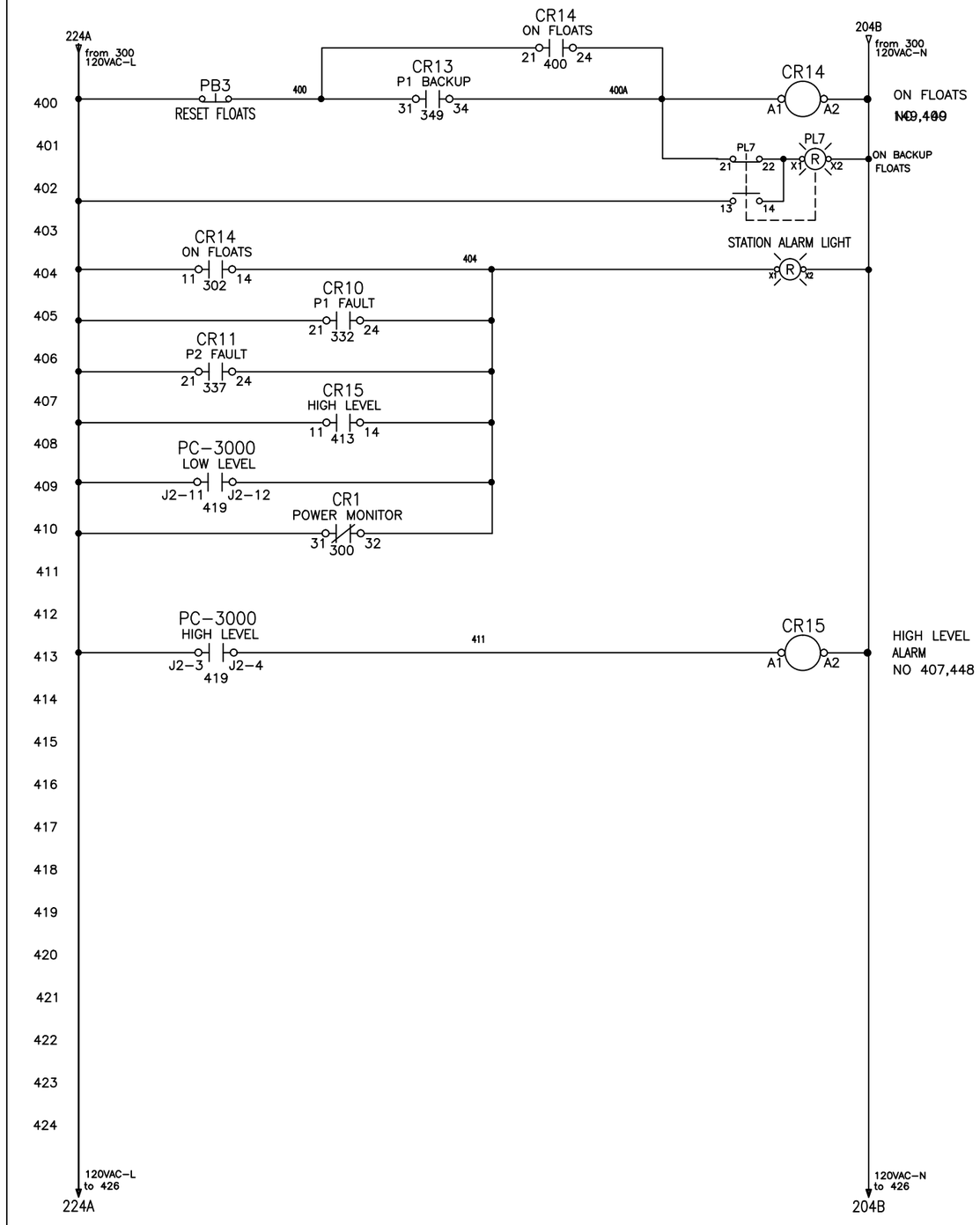

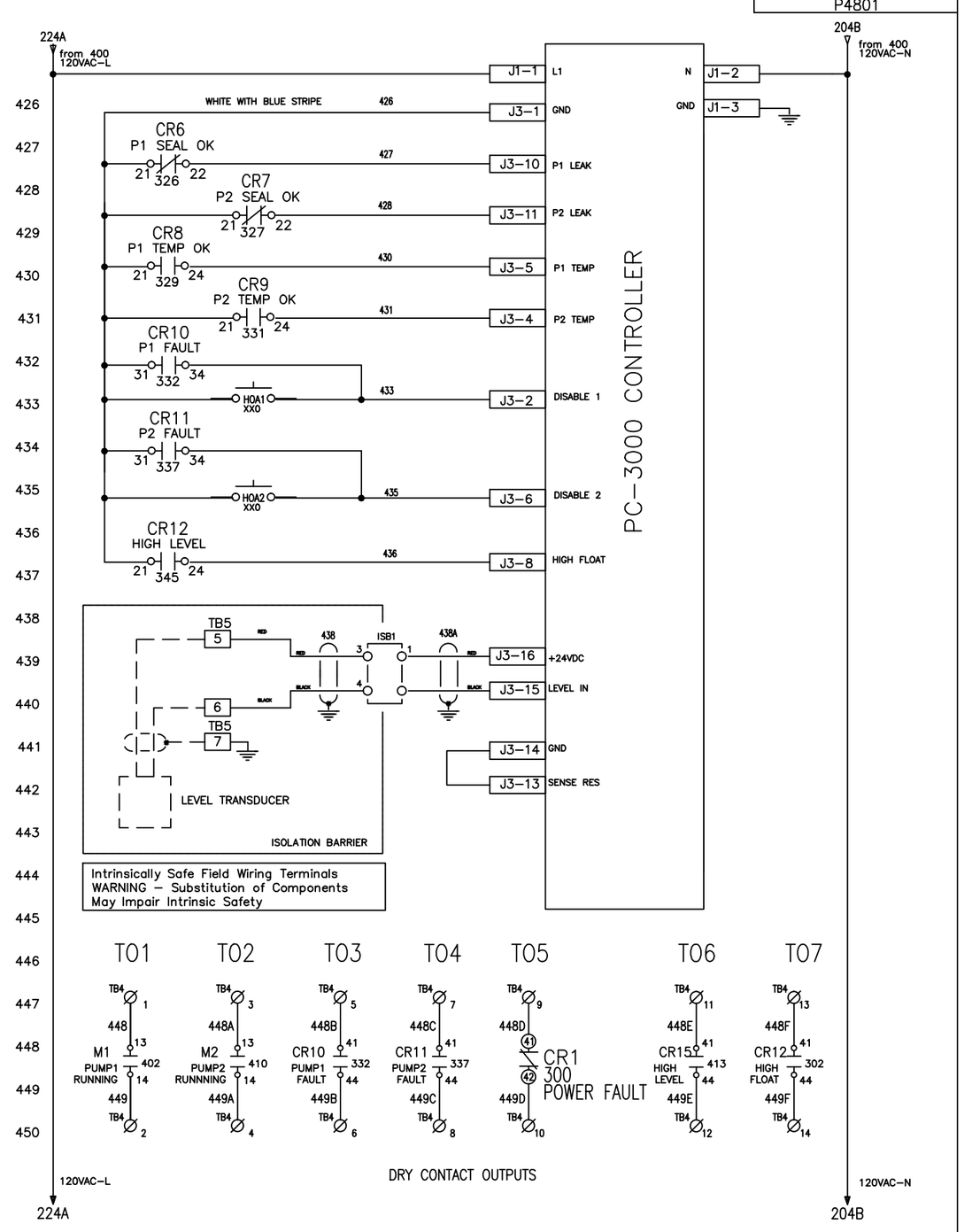

DRAWING NUMBER
P4801

REV. LET.	REVISIONS	DATE	REV OR APPD BY	REV. LET.	REVISIONS	DATE	REV OR APPD BY
				A			

THIS DRAWING IS THE PROPERTY OF ROMTEC, INC. AND CONTAINS PROPRIETARY AND CONFIDENTIAL INFORMATION WHICH MUST NOT BE DUPLICATED, USED OR DISCLOSED OTHER THAN EXPRESSLY AUTHORIZED BY ROMTEC, INC.

SALES REP:	ROMTEC, INC.
CUSTOMER:	
	PHONE: 541-496-9678
	ROMTEC UTILITIES, INC.
	ROMTEC UTILITIES, INC. ROSEBURG, OREGON

DATE	3/10/14
DESIGN WDB	
DRAWN	
CHK'D	
APPR'D	
SHEET	4 OF 8
REV.	1
HP	40
SIZE	C

PROJECT NAME:	INDIAN SPRINGS STORMWATER
FILE NO:	
CONFIG NO:	
ADDER NO:	
PROJECT NUMBER	
DRAWING NUMBER	P4801

DRAWING NUMBER
P4801

PANEL TERMINAL BLOCKS
FIELD CONNECTIONS

TELEMETRY / AUX CONNECTIONS

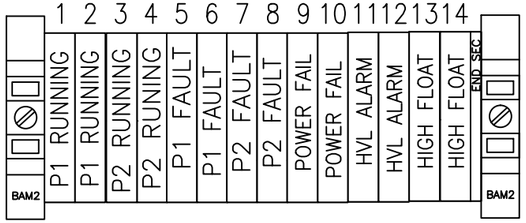

TB4

FLOAT CONNECTIONS

LEVEL XDUCER CONNECTIONS

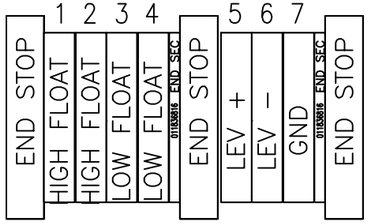

TB5

PUMP 1 CONNECTIONS

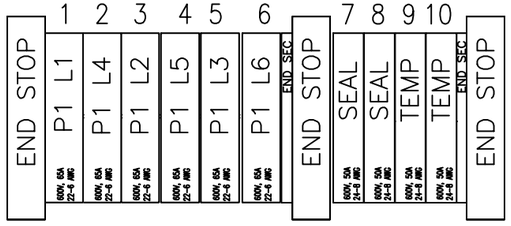

TB2

PUMP 2 CONNECTIONS

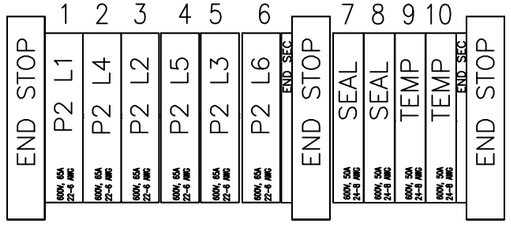

TB3

DTB1

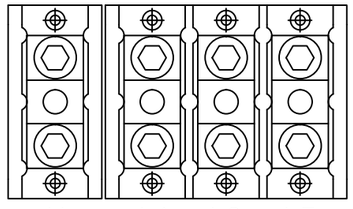

MAIN POWER CONNECTIONS

G

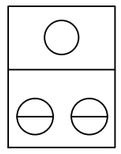

PUMP GROUND CONNECTIONS

G

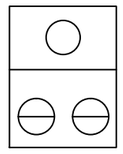

PUMP GROUND CONNECTIONS

G

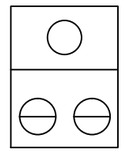

MAIN GROUND CONNECTIONS

REV. LET.	REVISIONS	DATE	REV OR APPD BY
A			

THIS DRAWING IS THE PROPERTY OF ROMTEC, INC. AND CONTAINS PROPRIETARY AND CONFIDENTIAL INFORMATION WHICH MUST NOT BE DUPLICATED, USED OR DISCLOSED OTHER THAN EXPRESSLY AUTHORIZED BY ROMTEC, INC.

SALES REP: ROMTEC, INC.
CUSTOMER:
PHONE: 541-496-9678

ROMTEC UTILITIES, INC.

ROMTEC UTILITIES, INC. ROSEBURG, OREGON

DATE 3/10/14
DESIGN WDB
DRAWN
CHK'D
APPR'D
SHEET 5 OF 5

REV. 1
HP 40
SIZE C

PROJECT NAME: INDIAN SPRINGS STORMWATER
FILE NO:
CONFIG NO:
ADDER NO:
PROJECT NUMBER
DRAWING NUMBER P4801

DRAWING NUMBER
P4801

4.03 CONTROL PANEL DATA SHEETS

PAGE IS INTENTIONALLY LEFT BLANK

ct quantities in the Qty column (E) by the
ts.
Prep button.
ata tab below.
hat have a quantity for Columns A through

xcel file.
d information into cell A1.
e as type CSV (MS-DOS) and exit file.
e Engineering/PDM/Engineering
g Part Revision screen ("CONSISTS OF"
Right Mouse Button and select Import
ure/Import External Product Structure.
iles (*.*) and select the newly saved file.

BILL OF MATERIAL - INTERNAL USE ONLY

MEANS NO PART # YE
MEANS BIN ITEM ONL
MEANS DEFINED PAR

			QUOTE # :			**CUSTOMER :**	**ROMTEC**	
			E3711			**MODEL # :**	**P4801**	
			BY :			**JOB NAME :**	**INDIAN SPRINGS STORMWATER**	
			WDB			**DESCRIPTION :**	**40 HP DUPLEX 460//3/60 PC-3000 IS CONTROL PANEL**	
IFS Part #			**QTY.**			**PART #**	**DESCRIPTION**	
						DIST. BLOCK	**SQUARE D**	
1027471		1	2			9080LBA362104	(1)#14-2/0 (4)#14-4 3 POLE - 175A/85A	
1028800		1	1			9080LBA363106	(1)#6-400 (6)#14-2 3 POLE - 335A/115A	
1027473		1	1			9080LBA363101	(1)#6-350 (1)#6-350 3 POLE - 310A/310A	
						NEUTRAL BLOCKS	**SQUARE D**	
1027460		1	1			9080LBA163101	(1)#6-350 (1)#6-350 1 POLE - 310A/310A	
						GROUND BLOCKS	**BURNDY**	
6001300		1	2			K2A26U	2/0 DOUBLE LUG	
1040006		1	1			K2A31U	250 MCM DOUBLE LUG	
						CIRCUIT BREAKERS	**SQUARE D**	
1024627		1	2			HDL36080	80A 600V 3 POLE	
1024577		1	1			HDL36150	150A 600V 3 POLE	
						CB HANDLE KIT	**SQUARE D**	
1027484		1	3			9421LH3	SHORT HANDLE 3"	
1027492		1	3			9421LS13	LONG SHAFT KIT (≥ 12" Enclosure)	
1027486		1	3			9421LJ7	H & J-FRAME CB OPERATING MECHANISM	

						MINIATURE CIRCUIT BREAKERS	**SQUARED**
1030216		1	2			60104	MINIATURE CB 1P 120V 3A
1032140		1	1			60106	MINIATURE CB 1P 120V 5A
1030942		1	2			60112	MINIATURE CB 1P 120V 15A
1039763		1	1			MGN61318	MINIATURE CB 2P 480Y/277V 8A
1024120		1	1			MGN61323	MINIATURE CB 3P 480Y/277V 1A
1030403		1	1			MGN61331	MINIATURE CB 3P 480Y/277V 15A
						CONTACTORS	**TELEMECHANIQUE IEC**
1012387		1	2			LC1D65G7	65 AMP 3P 480V
						AUX CONTACTS	**SQUARE D NEMA**
1027512		1	2			9999ST1	CONTACTOR COIL TRANSIENT SUPPRESOR
						SOFT STARTS	**SQUARE-D**
1019114		1	2			**ATS48D62Y**	STARTER,SOFT START/STOP SS 62A 480
1030041		1	2			**VW3G48101**	SOFT,START,REMOTE DISPLAY,SQD
						TRANSFORMERS (CONTROL)	**SQUARE D**
6000160		1	1			9070T1500D1	1500VA 240-480VAC/120VAC
						FUSE HOLDERS	**SQUARE-D**
1031446		1	2			DFCC1	600VAC 1P 30A DIN RAIL MOUNT
						600V FUSES (TYPE CC)	**BUSSMAN (TYPE CC)**
1040019		1	2			KTK-R-1	1 AMP 600V
						SELECTORS	**SQUARE D 30MM**
1040194		1	2			9001SKS42BH2	3 POS CAM "B" - 2 NO 2 NC
						PUSH BUTTON	**SQUARE D 22 MM**
1027100		1	2			XB4BA21	1 NO BLACK
1028462		1	1			XB4BA42	1 NC RED
						CONTACT BLOCKS	**SQUARE D**
1022054		1	2			ZBE101	CONTACT BLOCK NO 22MM

						PILOT LIGHT	**SQUARE D 30MM**
1040187		1	5			9001SKT1R31	115V PUSH TO TEST RED
1040188		1	2			9001SKT1G31	115V PUSH TO TEST GREEN
						RELAY SOCKETS 300V	**IDEC**
1003062		1	1			SR2P-06	8 PIN TUBE-TYPE SOCKET 300V
						RELAY SOCKET 600V	**IDEC**
6001496		1	1			OT08	600V 8-PIN TUBE-TYPE SOCKET
						RELAYS	**SQUARE-D**
1028816		1	15			RXM4AB1F7	ZELIO RELAY 120VAC 4PDT
1028817		1	15			RXZ400	HOLD DOWN CLIPS
1028815		1	15			RXZE2M114M	RELAY SOCKET 4PDT
						INTRINSICALLY SAFE RELAYS	**TURCK**
1038070		1	1			IM1-22eX-R	(M7541231) DUAL CHANNEL UNIVERSAL SUPPLY
						INTRINSICALLY SAFE BARRIER	**ALLEN BRADLEY**
1038949		1	1			897H-S214	SINGLE CHANNEL 4-20 ma
						PHASE MONITOR	**MACROMATIC**
1030949		1	1			PMPU	208-480V ADJUSTABLE PHASE MONITOR
						LIGHTNING ARRESTOR	**SQUARE-D**
6000368		1	1			SDSA3650	3 PH
						TIMERS	**IDEC**
1027953		1	1			GT3A-3AF20	120V 0-10 SEC/MIN/HR
						ELAPSED TIME METERS	**REDINGTON**
1030945		1	2			711-0160	115VAC
						CYCLE COUNTER	**REDINGTON**
6000869		1	2			P2-4816	115VAC

						GROUND FAULT INTERRUPTER	**HUBBELL**
1040368		1	2			GF15WLA	15 AMP GFCI
						DUPLEX OUTLET	**HUBBELL/RACO**
1028216		1	1			8660	HANDY BOX
						HEATER	**HOFFMAN**
6000366		1	1			DAH2001A	HEATER 200W 120VAC
						CONTROLLERS	**PRIMEX CONTROLS**
1026141P		1	1			1026141	PC-3000 ANALOG CONTROLLER
						OUTSIDE ALARM LIGHT	**INGRAM**
1032874		1	1			SBN120AC-R	SUNLIGHT VISIBLE LED ALARM LIGHT - 120V RED
						LIGHT GUARD	**TOMAR**
1030725		1	1			G470	YELLOW LAMP CAGE
						ENCLOSURES (DOUBLE DO	**SAGINAW**
1030159		1	1			**SCE-60EL4812LPPL**	**60 X 48 X 12 - PAINTED STEEL N4 ENCLOSU**
1029569		1	1			**SCE-60P48**	**60 X 48 BACKPLATE**
						ALUMINUM INNER DOOR	**PRIMEX CLW (DOOR STOP INCLUDED)**
1040573		1	2			CPC-INDR-60X48AL	60 X 24 DEADFRONT (DBL DOOR)
						DRIP SHIELDS STAINLESS	**PRIMEX CONTROLS**
1040601		1	1			RGD-48	STAINLESS STEEL DRIP SHIELD (48"L)
						ENCLOSURE DOOR STOP	**HOFFMAN**
6001711		1	2			ADSTOPK	STEEL KIT
						SCHEMATICS	**PRIMEX CONTROLS**
1040374		1	1			LITERATURE, SCHEMS, CLW	MATCHES PANEL NUMBER

LBC165212

LBA365212

LBA361104

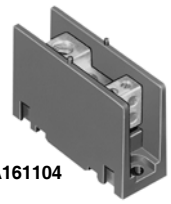

LBA161104

Standard Power Distribution Blocks

Lug WireRange▲		Aluminum■						Dim. Type
Main	Branch	One Pole		Two Pole		Three Pole		
		Type ★	Price	Type ★	Price	Type ★	Price	
(1) #14–2/0	(1) #14–2/0	LBA162101	$ 6.90	LBA262101	$ 14.70	LBA362101	$ 17.10	2
(1) #6–350 kcmil	(1) #6–350 kcmil	LBA163101	35.60	LBA263101	54.00	LBA363101	71.00	3
(1) #4–600 kcmil	(1) #4–600 kcmil	LBA164101	63.00	N/A	. . .	LBA364101	122.00	4
(2) #4–350 kcmil	(2) #4–350 kcmil	LBA165202	65.00	LBA265202	98.00	LBA365202	126.00	5
(2) #4–500 kcmil	(2) #4–500 kcmil	LBA1652021	60.00	LBA2652021	137.00	LBA3652021	162.00	5
(1) #14–2/0	(4) #14–4	LBA162104	20.30	LBA262104	30.50	LBA362104	45.60	2
(1) #14–2/0	(6) #14–4	N/A	. . .	N/A	. . .	LBA362106	87.00	...▼
(1) #6–400 kcmil	(4) #14–2	LBA163104	37.20	LBA263104	56.00	LBA363104	75.00	3
(1) #6–400 kcmil	(6) #14–2	LBA163106	39.30	LBA263106	59.00	LBA363106	81.00	3
(1) #6–400 kcmil	(8) #14–2	LBA164108	51.00	LBA264108	77.00	LBA364108	107.00	4
(1) #4–500 kcmil	(6) #14–2/0	LBA165106	84.00	LBA265106	126.00	LBA365106	155.00	5
(1) #4–500 kcmil	(12) #14–2	LBA165112	89.00	LBA265112	134.00	LBA365112	174.00	5
(2) #14–2/0	(6) #14–4	LBA163206	39.80	LBA263206	60.00	LBA363206	81.00	3
(2) #4–500 kcmil	(8) #14–2/0	LBA165208	84.00	LBA265208	126.00	LBA365208	167.00	5
(2) #4–500 kcmil	(12) #14–4	LBA165212	90.00	LBA265212	137.00	LBA365212	174.00	5

Miniature Power Distribution Blocks

Lug Wire Range▲		Aluminum■						Dim. Type
Main	Branch	One Pole		Two Pole		Three Pole		
		Type ★	Price	Type ★	Price	Type ★	Price	
(1) #14–2	(1) #14–2	LBA161101	$ 8.90	N/A	. . .	LBA361101	$ 16.60	1
(1) #14–2	(4) #18–10	LBA161104	17.60	LBA261104	$20.40	LBA361104	38.70	1

Copper Power Distribution Blocks

Lug Wire Range▲		Copper						Dim. Type
Main	Branch	One Pole		Two Pole		Three Pole		
		Type ★	Price	Type ★	Price	Type ★	Price	
(1) #18–1/0	(1) #18–1/0	LBC162101	$ 66.00	N/A	. . .	LBC362101	$134.00	2
(1) #6–250 kcmil	(1) #6–250 kcmil	LBC163101	83.00	N/A	. . .	LBC363101	155.00	3
(1) #14–2/0	(4) #14–4	LBC162104	66.00	LBC262104	$ 98.00	LBC362104	165.00	2
(1) #4–500 kcmil	(6) #14–2	LBC163106	102.00	LBC263106	156.00	LBC363106	236.00	3
(2) #14–2/0	(6) #14–4	LBC163206	89.00	LBC263206	134.00	LBC363206	179.00	3
(2) #4–500 kcmil	(8) #14–2/0	LBC165208	181.00	N/A	. . .	LBC365208	395.00	5
(2) #4–500 kcmil	(12) #14–2	LBC165212	189.00	N/A	. . .	LBC365212	378.00	5

▲ Lugs suitable for use with 75°C conductors. (#) indicates number of conductors.
■ Aluminum blocks will accept either Al or Cu conductors.
♦ Cu blocks will accept copper conductors only.
★ CE Marked.
▼ Refer to catalog for dimensions.

Dimensions

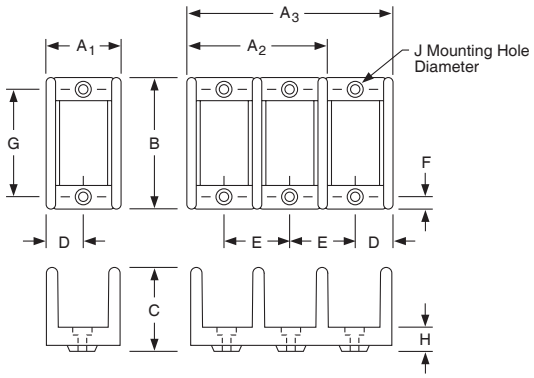

Dimensions (Inches)

Type	A1	A2	A3	B	C	D	E	F	G	H	J
1	.76	1.40	2.03	2.29	1.62	.38	.64	.19	1.93	.32	.201
2	1.13	1.94	2.75	2.88	1.78	.56	.81	.31	2.25	.24	.205
3	1.94	3.47	5.00	4.00	2.61	.97	1.53	.31	3.38	.40	.203
4	2.28	4.16	6.04	4.75	2.92	1.14	1.88	.31	4.13	.51	.20
5	3.17	5.88	8.54	5.50	3.12	1.58	2.69	.38	4.75	.50	.265

Clear Plastic Covers (0.045 in. thick)

Note: There are no covers for miniature blocks.

For LBA Type	Type	Price △	Dim. A	Dim. B
LBA162..., LBC162	LB21	$ 7.50	1.062	2.750
LBA262..., LBC262	LB22	9.00	1.875	2.750
LBA362..., LBC362 □	LB23	10.50	2.688	2.750
LBA163..., LBC163	LB31	8.30	1.782	3.813
LBA263..., LBC263	LB32	9.80	3.313	3.813
LBA363..., LBC363	LB33	11.30	4.844	3.813
LBA164...	LB41	9.00	2.125	4.563
LBA264...	LB42	10.50	4.000	4.563
LBA364...	LB43	12.00	5.875	4.563
LBA165..., LBC165	LB51	9.80	2.719	5.313
LBA265..., LBC265	LB52	11.30	5.656	5.313
LBA365..., LBC365	LB53	12.80	8.375	5.313

△ Above covers must be ordered in multiples of 5 covers.
Above covers are supplied with two self tapping screws per cover.
□ Will not work on a 9080LBA362106 block.

Application Data

UL component recognized (File E60616 CCN XCFR2).
CSA certified (File LR70361).
Voltage Rating—Class B & C—600 V
Blocks are rated based on NEC Table 310-16 using 75°C wire.
Aluminum blocks are tin plated high conductive aluminum.
Copper blocks are tin plated high conductive copper.
Housing material:

- Miniature Blocks are made from high impact thermoplastic rated at 125°C. max. & -40°C. min.
- Full Size Blocks are made from general purpose phenolic rated at 150°C. max. & -40°C. min.

All blocks have a flammability rating of UL 94V-0.

For additional information, reference Catalog # 9080CT9603.

CP1 | Discount Schedule

© 2003 Schneider Electric
All Rights Reserved
9/8/03

SCREW:E0980	MATERIAL:ALUMINUM, X0031	CELL: ABM	TOLERANCES-UNLESS OTHERWISE SPECIFIED 2 PL. DEC. ±.010 TRUE C.L. ±.015 3 PL. DEC. ±.007 ANGLES ±1	DWG. NO. D1112	ILSCO CORP.
CAT. NO.:	PLATING:EL-TIN	STUFFER SHT.:SEE CHART			
MASS:SEE CHART	MARKING: SEE CHART		DRAWN BY:CLH SCALE: 2:1	SHEET 1 OF 1	
SURFACE AREA:SEE CHART²			DATE:1/16/2008 SIZE: B		

REV.	DESCRIPTION
F	

Cat #: AU-0
AU-0-B2

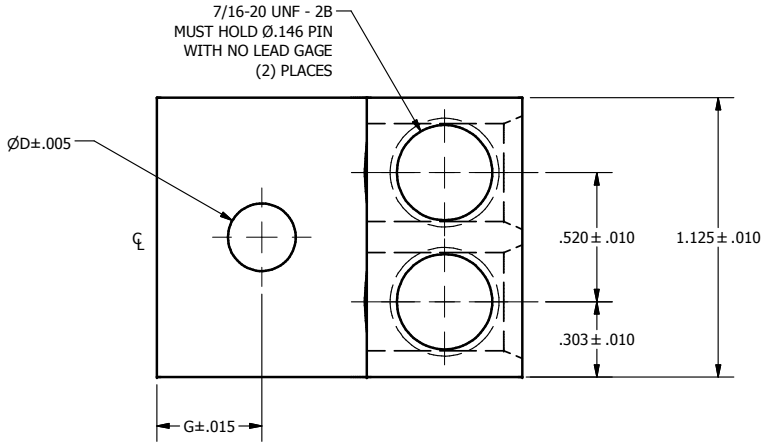

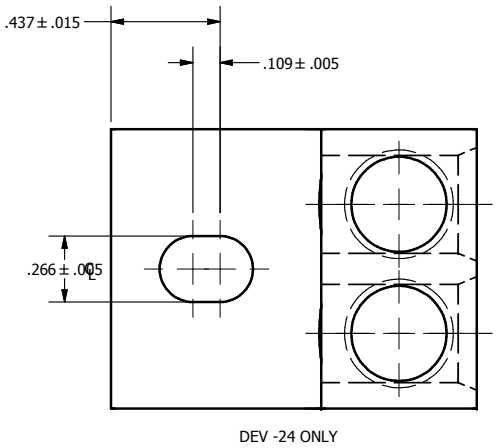

DEV -24 ONLY

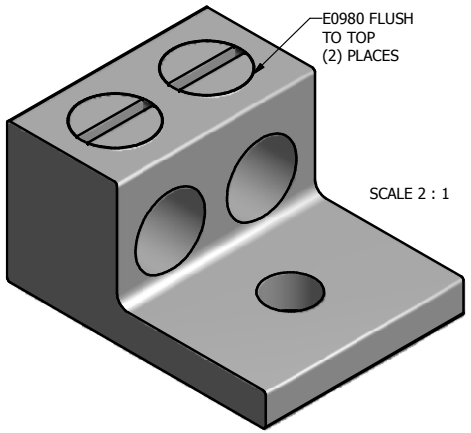

SCALE 2 : 1

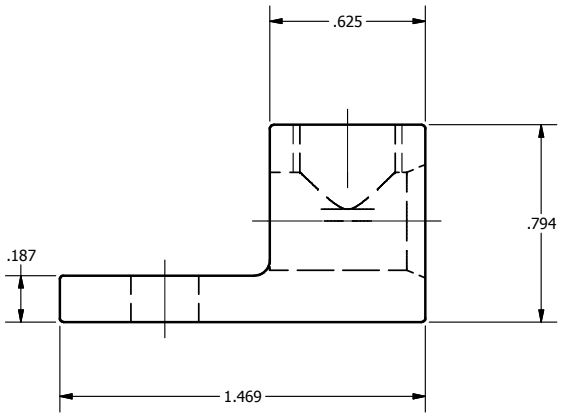

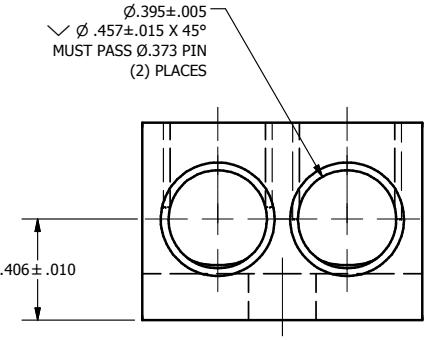

DEV	D	G	MASS LBS.	A	MARKING
-22	.272	.422	.509	7.5048	ILSCO, D1112, AU-0, 1/0-14, AL9CU

THE INFORMATION CONTAINED WITHIN THIS DOCUMENT IS PROPRIETARY TO ILSCO AND MAY NOT BE DISCLOSED WITHOUT PRIOR WRITTEN CONSENT

New!

HD and HG 2P

H-frame

J-frame

Table 7.37: H-frame 150 A and J-frame 250 A Thermal-magnetic Circuit Breakers (600 Vac, 250 Vdc) With Factory Sealed Trip Unit Suitable for Reverse Connection▲

Current Rating @ 40°C	Fixed AC Magnetic Trip		Cat. No.■♦	Interrupting Rating (2nd Letter of Catalog Number)								Terminal Wire Range
				D		G		J		L		
				$ Price								
	Hold	Trip		80% Rated	100% Rated	80% Rated	100% Rated	80% Rated	100% Rated	80% Rated	100% Rated	
H-frame, 150A 2P, 600 Vac 50/60 Hz, 250 Vdc												
15 A	350 A	750 A	H( )L26015(C)	580.00	696.00	846.00	1015.00	1039.00	1247.00	1576.00	1891.00	AL150HD 14–3/0 AWG Al or Cu
20 A	350 A	750 A	H( )L26020(C)	580.00	696.00	846.00	1015.00	1039.00	1247.00	1576.00	1891.00	
25 A	350 A	750 A	H( )L26025(C)	580.00	696.00	846.00	1015.00	1039.00	1247.00	1576.00	1891.00	
30 A	350 A	750 A	H( )L26030(C)	580.00	696.00	846.00	1015.00	1039.00	1247.00	1576.00	1891.00	
35 A	400 A	850 A	H( )L26035(C)	580.00	696.00	846.00	1015.00	1039.00	1247.00	1576.00	1891.00	
40 A	400 A	850 A	H( )L26040(C)	580.00	696.00	846.00	1015.00	1039.00	1247.00	1576.00	1891.00	
45 A	400 A	850 A	H( )L26045(C)	580.00	696.00	846.00	1015.00	1039.00	1247.00	1576.00	1891.00	
50 A	400 A	850 A	H( )L26050(C)	580.00	696.00	846.00	1015.00	1039.00	1247.00	1576.00	1891.00	
60 A	800 A	1450 A	H( )L26060(C)	580.00	696.00	846.00	1015.00	1039.00	1247.00	1576.00	1891.00	
70 A	800 A	1450 A	H( )L26070(C)	708.00	849.00	998.00	1198.00	1147.00	1377.00	1742.00	2091.00	
80 A	800 A	1450 A	H( )L26080(C)	708.00	849.00	998.00	1198.00	1147.00	1377.00	1742.00	2091.00	
90 A	800 A	1450 A	H( )L26090(C)	708.00	849.00	998.00	1198.00	1147.00	1377.00	1742.00	2091.00	
100 A	900 A	1700 A	H( )L26100(C)	708.00	849.00	998.00	1198.00	1147.00	1377.00	1742.00	2091.00	
110 A	900 A	1700 A	H( )L26110(C)	1381.00	1657.00	2039.00	2447.00	2966.00	3559.00	3689.00	4427.00	
125 A	900 A	1700 A	H( )L26125(C)	1381.00	1657.00	2039.00	2447.00	2966.00	3559.00	3689.00	4427.00	
150 A	900 A	1700 A	H( )L26150(C)	1381.00	1657.00	2039.00	2447.00	2966.00	3559.00	3689.00	4427.00	
H-frame 150A 3P, 600 Vac 50/60 Hz, 250 Vdc												
15 A	350 A	750 A	H( )L36015(C)	725.00	870.00	995.00	1194.00	1299.00	1559.00	1899.00	2279.00	AL150HD 14–3/0 AWG Al or Cu
20 A	350 A	750 A	H( )L36020(C)	725.00	870.00	995.00	1194.00	1299.00	1559.00	1899.00	2279.00	
25 A	350 A	750 A	H( )L36025(C)	725.00	870.00	995.00	1194.00	1299.00	1559.00	1899.00	2279.00	
30 A	350 A	750 A	H( )L36030(C)	725.00	870.00	995.00	1194.00	1299.00	1559.00	1899.00	2279.00	
35 A	400 A	850 A	H( )L36035(C)	725.00	870.00	995.00	1194.00	1299.00	1559.00	1899.00	2279.00	
40 A	400 A	850 A	H( )L36040(C)	725.00	870.00	995.00	1194.00	1299.00	1559.00	1899.00	2279.00	
45 A	400 A	850 A	H( )L36045(C)	725.00	870.00	995.00	1194.00	1299.00	1559.00	1899.00	2279.00	
50 A	400 A	850 A	H( )L36050(C)	725.00	870.00	995.00	1194.00	1299.00	1559.00	1899.00	2279.00	
60 A	800 A	1450 A	H( )L36060(C)	725.00	870.00	995.00	1194.00	1299.00	1559.00	1899.00	2279.00	
70 A	800 A	1450 A	H( )L36070(C)	885.00	1061.00	1134.00	1361.00	1399.00	1679.00	2099.00	2519.00	
80 A	800 A	1450 A	H( )L36080(C)	885.00	1061.00	1134.00	1361.00	1399.00	1679.00	2099.00	2519.00	
90 A	800 A	1450 A	H( )L36090(C)	885.00	1061.00	1134.00	1361.00	1399.00	1679.00	2099.00	2519.00	
100 A	900 A	1700 A	H( )L36100(C)	885.00	1061.00	1134.00	1361.00	1399.00	1679.00	2099.00	2519.00	
110 A	900 A	1700 A	H( )L36110(C)	1733.00	2080.00	2399.00	2879.00	3449.00	4139.00	4499.00	5399.00	
125 A	900 A	1700 A	H( )L36125(C)	1733.00	2080.00	2399.00	2879.00	3449.00	4139.00	4499.00	5399.00	
150 A	900 A	1700 A	H( )L36150(C)	1733.00	2080.00	2399.00	2879.00	3449.00	4139.00	4499.00	5399.00	

Current Rating @ 40°C	Adjustable AC Magnetic Trip		Cat. No.■♦	Interrupting Rating (2nd Letter of Catalog Number)								Terminal Wire Range
				D		G		J		L		
				$ Price								
	Low	High		80% Rated	100% Rated	80% Rated	100% Rated	80% Rated	100% Rated	80% Rated	100% Rated	
J-frame 250A 2P, 600 Vac 50/60 Hz, 250 Vdc												
150 A	750 A	1500 A	J( )L26150(C)	1450.00	1740.00	2141.00	2569.00	3114.00	3737.00	3874.00	4648.00	AL175JD 4–4/0 AWG Al or Cu
175 A	875 A	1750 A	J( )L26175(C)	1450.00	1740.00	2141.00	2569.00	3114.00	3737.00	3874.00	4648.00	
200 A	1000 A	2000 A	J( )L26200(C)	1450.00	1740.00	2141.00	2569.00	3114.00	3737.00	3874.00	4648.00	AL250JD 3/0 AWG–350 kcmil Al or Cu
225 A	1125 A	2250 A	J( )L26225(C)	1450.00	1740.00	2141.00	2569.00	3114.00	3737.00	3874.00	4648.00	
250 A	1250 A	2500 A	J( )L26250(C)	1992.00	2390.00	2834.00	3401.00	4150.00	4979.00	4796.00	5755.00	
J-frame 250A 3P, 600 Vac 50/60 Hz, 250 Vdc												
150 A	750 A	1500 A	J( )L36150(C)	1820.00	2184.00	2519.00	3023.00	3621.00	4346.00	4724.00	5669.00	AL175JD 4–4/0 AWG Al or Cu
175 A	875 A	1750 A	J( )L36175(C)	1820.00	2184.00	2519.00	3023.00	3621.00	4346.00	4724.00	5669.00	
200 A	1000 A	2000 A	J( )L36200(C)	1820.00	2184.00	2519.00	3023.00	3621.00	4346.00	4724.00	5669.00	AL250JD 3/0 AWG–350 kcmil Al or Cu
225 A	1125 A	2250 A	J( )L36225(C)	1820.00	2184.00	2519.00	3023.00	3621.00	4346.00	4724.00	5669.00	
250 A	1250 A	2500 A	J( )L36250(C)	2499.00	2999.00	3334.00	4001.00	4825.00	5790.00	5995.00	7194.00	

▲ See page 7-23 for circuit breakers with field interchangeable trip units.
■ To complete catalog number, replace the blank with the appropriate rating (D, G, J, L).
♦ For 100% rated circuit breakers add a "C" in the 9th character place (for example, HDL26015**C** or JDL26150**C**).

Table 7.38: H- and J-frame Termination Options

Termination Letter
A - I-Line (See Section 9)
F = No Lugs (includes terminal nut kit on both ends)★
L = Lugs both ends
M = Lugs ON end Terminal Nut Kit OFF end
P = Lugs OFF end Terminal Nut Kit ON end
N = Plug-in ▼
D = Drawout ▼
S = Rear Connected ▼

For factory-installed termination, place termination letter in the third block of the circuit breaker catalog number.

H G L 3 6 1 0 0
└ Termination Letter

Plug-in

Drawout

Rear Connected

★ Add TS suffix for circuit breaker without terminal nut kit.
▼ For N and D pricing, add termination pricing on page 7-41 to price. For S pricing, add termination pricing on page 7-37 to price.

Table 7.39: H- and J-frame Interrupting Ratings

Voltage	Interrupting Rating			
	D	G	J	L
240 Vac	25 kA	65 kA	100 kA	125 kA
480 Vac	18 kA	35 kA	65 kA	100 kA
600 Vac	14 kA	18 kA	25 kA	50 kA

Accessories . . . . . Page 7-35
Optional Lugs . . . . . Page 7-38
Dimensions . . . . . Page 7-54
Enclosures . . . . . Page 7-55

© 2007 Schneider Electric
All Rights Reserved

Class **9421** / Refer to Catalog **9420CT9701**

Operating Mechanism

Type L Circuit Breaker Mechanisms

Type L door mounted, variable depth operating mechanisms feature heavy duty, all metal construction with trip indication. All can be padlocked in the "OFF" position when the enclosure door is open. Further, the handle assemblies can be locked "OFF" with up to three padlocks, which also locks the door closed. (The 3" handle accepts one padlock.)

Complete kits are rated for NEMA Type 1, 3R and 12 enclosures, and a door-drilling template is supplied to ease installation. They include a handle assembly, operating mechanism, and shaft assembly

Table 8.45: Complete Kits

Complete Kit Does Not Include Circuit Breaker Use With			Includes: Operating Mechanism Standard 6" Handle Standard Shaft Kit			Includes: Operating Mechanism Standard 6" Handle Long Shaft Kit			Includes: Operating Mechanism Short 3" Handle Long Shaft Kit		
Circuit Breaker or Interrupter Type	**Number of Poles**	**Frame Size (A)**	**Type**	**$ Price**	**Mounting Depth▲ Min.-Max.**	**Type**	**$ Price**	**Mounting Depth▲ Min.-Max.**	**Type**	**$ Price**	**Mounting Depth▲ Min.-Max.**
GJL	3	75, 100	LG1	**93.**	5-1/2—10-1/4	LG4	**105.**	5-1/2—20-7/8	LG3	**132.**	5-1/2—20-7/8
FAL, FCL, FHL	2–3	100	LN1	**93.**	5-1/2—10-7/16	LN4	**105.**	5-1/2—21	LN3	**132.**	5-1/2—21
KAL, KCL, KHL	2–3	250	LP1	**114.**	6-1/4—11-3/16	LP4	**126.**	6-1/4—21-3/4	LP3	**153.**	6-1/4—21-3/4
NSF, Powerpact H and J	2–3	250	LJ1	**114.**	5-1/2—10-3/4	LJ4	**126.**	5-1/2—21-3/8	—	—	—
LAL♦, LHL♦, Q4L	2–3	400	LR1	**161.**	6-5/16—10-7/8	LR4	**170.**	6-5/16—21-1/2			
MEL, MXL	2–3	800	LT1■	**161.**	7-3/16—11-5/8	LT4■	**170.**	7-3/16—22-1/4			
MAL, MHL	2–3	1200	LT1■	**161.**	7-3/16—11-5/8	LT4■	**170.**	7-3/16—22-1/4			
NAL, NCL, NEL, NXL	2–3	1200	LX1■	**161.**	8-1/4—12-3/4	LX4■	**170.**	8-1/4—23-3/8			
Powerpact M and P ▼	3	1200	LW1★	**161.**	7-3/16—11-5/8	LW4★	**170**	7-3/16—22-1/4			

3" handles are not recommended for use with these circuit breakers.

New!

Component parts kits are rated for NEMA Type 1, 3, 3R, 4, 4X, and 12 enclosures. All handle assemblies are painted (the handle is flat black and the base ring is silver.)

Table 8.46: Component Parts

Use With			3" Handle Assemblies Type 1, 3R, 12		Standard Handle Assemblies Type 1, 3R, 12		Operating Mechanism Includes Lockout		Standard Shaft (Support Bracket Not Required)			Long Shaft (Support Bracket Included)		
Circuit Breaker or Interrupter Type	**No. of Poles**	**Frame Size (A)**	**Type**	**$ Price**	**Type**	**$ Price**	**Type**	**$ Price**	**Mounting Depth▲ Min. - Max.**	**Type**	**$ Price**	**Mounting Depth▲ Min. - Max.**	**Type**	**$ Price**
GJL	3	75, 100	LH3	**60.**	LH6	**33.30**	LG7	**45.00**	5-1/2—10-7/16	LS8	**14.30**	5-1/2—21	LS13	**23.70**
FAL, FCL, FHL	2–3	100	LH3	**60.**	LH6	**33.30**	LF1	**47.60**	5-1/2—10-7/16	LS8	**14.30**	5-1/2—21	LS12	**23.70**
KAL, KCL, KHL	2–3	250	LH3	**60.**	LH6	**33.30**	LK1	**70.00**	6-1/4—11-3/16	LS8	**14.30**	6-1/4—21-3/4	LS12	**23.70**
NSF, Powerpact H and J	2–3	250	LH3	**60.**	LH6	**33.30**	LJ7	**70.00**	5-1/2—10-1/4	LS8	**14.30**	5-1/2—21-3/8	LS13	**23.70**
LAL♦, LHL♦, Q4L	2–3	400	3" handles are not recommended for use with these circuit breakers.		LH6	**33.30**	LL1	**113.00**	6-5/16—10-7/8	LS8	**14.30**	6-5/16—21-1/2	LS10	**23.70**
MEL, MXL	2–3	800			LH8	**33.30**	LM1	**113.00**	7-3/16—11-5/8	LS8	**14.30**	7-3/16—22-1/4	LS10	**23.70**
MAL, MHL	2–3	1200			LH8	**33.30**	LM1	**113.00**	7-3/16—11-5/8	LS8	**14.30**	7-3/16—22-1/4	LS10	**23.70**
NAL, NCL, NEL, NXL	2–3	1200			LH8	**33.30**	LX7	**113.00**	8-1/4—12-3/4	LS8	**14.30**	8-1/4—23-3/8	LS10	**23.70**
Powerpact M and P▼	3	1200			LHP8	**33.3**	LW7	**113.00**	7-3/16—11-5/8	LS8	**14.30**	7-3/16—22-1/4	LS10	**23.70**

New!

▲ Mounting depth measured from circuit breaker mounting surface (control panel) to outside of enclosure door in inches.
■ Types LT1, LT4, LX1, and LX4 include an 8" handle rather than a 6" handle.
♦ **Warning:** These operating mechanisms cannot be used with any LA/LH circuit breaker with an MB or MT suffix.
★ Type LW1 and LW4 include an 8 in. handle (9421LHP8) rather than a 6 in. handle.
▼ These breakers must use the 9421LHP** or LCP** handles only

3" Handle Assembly

Table 8.47: NEMA Type 3 and 4 Handle Assemblies△

Use With			Standard Handle Assemblies				Special 3" Version			
Circuit Breaker or Interrupter Type	**No. of Poles**	**Frame Size (A)**	**NEMA Type 3, 4 (Painted)**		**NEMA Type 3, 4, 4X (Chrome Plated)**		**NEMA Type 3, 4 (Painted)**		**NEMA Type 3, 4, 4X (Chrome Plated)**	
			Type	**$ Price**	**Type**	**$ Price**	**Type**	**$ Price**	**Type**	**$ Price**
GJL	3	75	LH46	**60.**	LC46	**99.**	LH43	**110.**	LC43	**155.**
FAL, FCL, FHL	2–3	100	LH46	**60.**	LC46	**99.**	LH43	**110.**	LC43	**155.**
KAL, KCL, KHL	2–3	250	LH46	**60.**	LC46	**99.**	LH43	**110.**	LC43	**155.**
NSF, Powerpact H and J	2–3	250	LH46	**60.**	LC46	**99.**	LH43	**110.**	LC43	**155.**
LAL, LHL, Q4L	2–3	400	LH46	**60.**	LC46	**99.**	3" handles are not recommended for use with these circuit breakers.			
MEL, MXL	2–3	800	LH48	**60.**	LC48	**99.**				
MAL, MHL	2–3	1000	LH48	**60.**	LC48	**99.**				
NAL, NCL, NEL, NXL	2–3	1200	LH48	**60.**	LC48	**99.**				
Powerpact M and P	3	1200	LHP48	**60.**	LCP48	**99.**				

△ Due to gasketing, NEMA Type 3 & 4 handle assemblies are NOT trip indicating.

Standard Handle Assembly

New!

Table 8.48: IEC Style Operating Mechanisms

Circuit Breaker or Interrupter Type	Type 1, 4, 4X, 12			Operating Mechanism includes lockout		Extension Shafts			
						Mounting Depth		Type	$ Price
	Color	Type	$ Price	Type	$ Price	Min.	Max.		
GJL	Red/Yellow	NW3	**60.**	LG8	**$47.60**	6-1/8	10-3/4	NS16	**19.10**
	Black	NW3B	**60.**			6-1/8	17-7/8	NS336□	**23.70**

□ Contains support bracket.

Note: Not used with GJL, NAL, NCL, NEL, NXL, NSF, NSJ, Powerpact C, D, H, and J circuit breakers; use field-installed circuit breaker interlocks instead.

Table 8.49: Electrical Interlock Kits—Class 9999 ◊

Description	Class	Type	$ Price
Single Pole Double Throw	9999	R47	**87.**
Double Pole Double Throw	9999	R48	**147.**

◊ (optional accessory for use with 9421L operating mechanisms)

© 2007 Schneider Electric
All Rights Reserved

UL 489 Listed 240 Vac C60 Circuit Breakers (AC)

A selected range of Multi-9 circuit breakers rated 240 V are UL 489 Listed. Unlike UL 1077 Supplementary Protectors, these UL 489 circuit breakers can be used for branch circuit protection as required by the National Electrical Code.

As shown in tables Table 5 and Table 6, the UL 489 Listed products are available in C and D curves. They include devices ranging from 0.5 to 35 A.

UL 489 Listed Multi 9 C60 Circuit Breakers

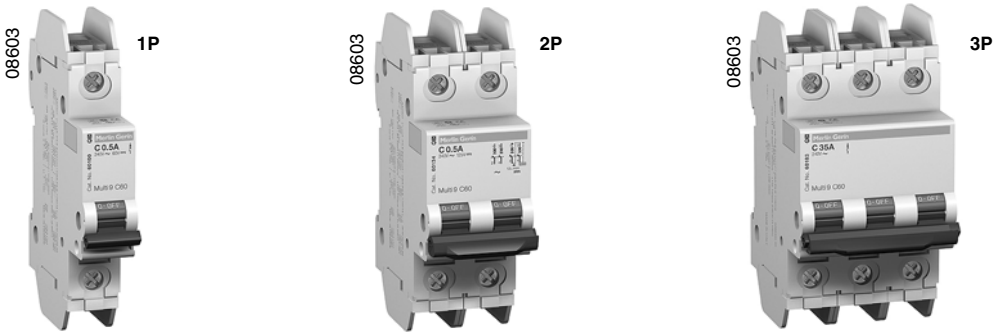

Table 4: Specifications for UL 489 240 V Listed C60N Circuit Breakers

High Voltage Withstand	6 kV	
Connector: Box Lug	Rating	UL 486A File No. E216919 (Use with Copper Wire Only)
	Connection	0.5–25 A: 14–4 AWG (2–25 mm^2) Cables Torque to 22 lb-in. (2.48 N•m) 30–35 A: 14–2 AWG (1–35 mm^2) Cables Torque to 31 lb-in. (3.52 N•m)
Connector: Ring Tongue	Use Single UL Listed or CSA Certified Insulated Ring Tongue Only	Screw dia. 0.2 in. (5 mm) Torque to 18 lb-in. (2.03 N•m)
	Max Ring Terminal Width	0.54 in. (14 mm)
Mounting	35 mm DIN rail	
Degree of Protection	Case	IP40 as per IEC 529
	Terminals	IP20
Temperatures	Calibration	25°C (77°F)
	Storage	-40 to 80°C (-40 to 176°F)
	Operating	-30 to 70°C (-22 to 158°F)
Plug-On Auxiliary Modules with Mechanical Linkage:	MN Undervoltage Trip	
	MX + OF Shunt Trip/Auxiliary Switch	
	OF Auxiliary Switch	
	SD Alarm Switch	
Tropicalization	Treatment 2	Relative Humidity: 95% at 131°F (55°C)
Number of Operating Cycles	Electrical (O-C)	6,000 load, 4,000 no-load
See specifications Table 2 for dimensions, weights and interrupting ratings		

Standard Features

- Fast closing: Allows increased withstand to the high inrush currents of some loads.
- Trip-free mechanism: Contacts cannot be held in the I-ON position when the C60 circuit breaker is tripped automatically.
- Positive indication of contact disconnect. Green mechanical indication on front face of circuit breaker shows that all poles are open.
- C curve: Overcurrent protection for all application types. Magnetic release operates from 7 to 10 times ampere rating (7 to 14 for DC applications).

Schneider Electric © 2002–2008 Schneider Electric All Rights Reserved

- D curve: Overcurrent protection for loads with high inrush currents (motors, transformers). Magnetic release operates between 10 and 14 times ampere rating (no dc rating for D curve).
- Suitable for reverse feeding.
- Allows locking in O-OFF position using padlock attachment.

Connections

Three versions of field wiring connectors are available for the 240 Vac UL 489 Listed devices:

- Box lug, meeting UL 486A requirements
- Ring tongue terminal with 5 mm screw
- Ring Tongue terminals with Fingersafe (IP20) shrouds

The circuit breakers can be ordered with the following combinations of connectors:

- Line terminal box lug/load terminal box lug
- Line terminal ring tongue/load terminal ring tongue (for fingersafe version, add -F suffix to catalog number)
- Line terminal box lug/load terminal ring tongue

Figure 5: Connection Options for 240 Vac UL 489 Listed Devices

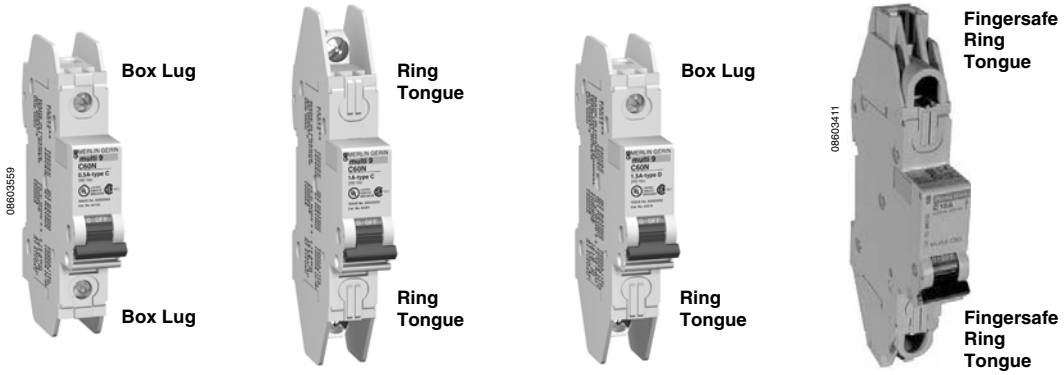

Standards

- UL 489 Circuit Breaker: File No. E215117
- Single pole 15–20 A is UL Listed as SWD (switching duty).
- 1-, 2-, and 3-pole 15–35 A are HID (high intensity discharge) rated.
- CSA C22.2 No. 5.1 Circuit Breakers: File No. 179014
- IEC 60947-2
- CE Marked

© 2002–2008 Schneider Electric All Rights Reserved

Catalog Numbers

Table 5: Catalog Numbers for C Curve, UL 489 Listed 240 Vac C60 Miniature Circuit Breakers (Box Lug and Ring Tongue Terminal Combinations)

Rating	1P			2P			3P		
	Box/Box	Ring/Ring[1]	Box/Ring	Box/Box	Ring/Ring[1]	Box/Ring	Box/Box	Ring/Ring[1]	Box/Ring
0.5 A	60100	60200	60300	60134	60234	60334	—	—	—
1 A	60101	60201	60301	60135	60235	60335	60168	60268	60368
1.5 A	60102	60202	60302	60136	60236	60336	60169	60269	60369
2 A	60103	60203	60303	60137	60237	60337	60170	60270	60370
3 A	60104	60204	60304	60138	60238	60338	60171	60271	60371
4 A	60105	60205	60305	60139	60239	60339	60172	60272	60372
5 A	60106	60206	60306	60140	60240	60340	60173	60273	60373
6 A	60107	60207	60307	60141	60241	60341	60174	60274	60374
7 A	60108	60208	60308	60142	60242	60342	60175	60275	60375
8 A	60109	60209	60309	60143	60243	60343	60176	60276	60376
10 A	60110	60210	60310	60144	60244	60344	60177	60277	60377
13 A	60111	60211	60311	60145	60245	60345	60178	60278	60378
15 A	60112	60212	60312	60146	60246	60346	60179	60279	60379
20 A	60113	60213	60313	60147	60247	60347	60180	60280	60380
25 A	60114	60214	60314	60148	60248	60348	60181	60281	60381
30 A	60115	60215	60315	60149	60249	60349	60182	60282	60382
35 A	60116	60216	60316	60150	60250	60350	60183	60283	60383

[1] IP-20 Fingersafe ring tongue terminals may be ordered with an F suffix (example: 60210F)

Table 6: Catalog Numbers for D Curve, UL 489 Listed 240 Vac C60 Miniature Circuit Breakers (Line/Load as Box Lug or Ring Tongue Terminals)

Rating	1P			2P			3P		
	Box/Box	Ring/Ring[1]	Box/Ring	Box/Box	Ring/Ring[1]	Box/Ring	Box/Box	Ring/Ring[1]	Box/Ring
0.5 A	60117	60217	60317	60151	60251	60351	—	—	—
1 A	60118	60218	60318	60152	60252	60352	60184	60284	60384
1.5 A	60119	60219	60319	60153	60253	60353	60185	60285	60385
2 A	60120	60220	60320	60154	60254	60354	60186	60286	60386
3 A	60121	60221	60321	60155	60255	60355	60187	60287	60387
4 A	60122	60222	60322	60156	60256	60356	60188	60288	60388
5 A	60123	60223	60323	60157	60257	60357	60189	60289	60389
6 A	60124	60224	60324	60158	60258	60358	60190	60290	60390
7 A	60125	60225	60325	60159	60259	60359	60191	60291	60391
8 A	60126	60226	60326	60160	60260	60360	60192	60292	60392
10 A	60127	60227	60327	60161	60261	60361	60193	60293	60393
13 A	60128	60228	60328	60162	60262	60362	60194	60294	60394
15 A	60129	60229	60329	60163	60263	60363	60195	60295	60395
20 A	60130	60230	60330	60164	60264	60364	60196	60296	60396
25 A	60131	60231	60331	60165	60265	60365	60197	60297	60397
30 A	60132	60232	60332	60166	60266	60366	60198	60298	60398
35 A	60133	60233	60333	60167	60267	60367	60199	60299	60399

[1] IP-20 Fingersafe ring tongue terminals may be ordered with an F suffix (example: 60210F)

NOTE: UL 489 Listed Multi 9 circuit breakers are calibrated at 25°C (77°F). Please refer to the rating tables (page 80) for applications at temperatures greater than 25°C (77°F).

NOTE: The NEC requires that the continuous load applied to the circuit breaker shall not exceed 80% of the circuit breaker ampere rating.

Schneider Electric © 2002–2008 Schneider Electric All Rights Reserved

UL 489 Listed 480Y/277 Vac C60 Circuit Breakers (AC)

The UL 489 Listed 480Y/277 Vac Multi 9 C60 miniature circuit breakers can be used in 480Y/277 Vac systems. With amperages from 0.5 A to 20 A, they are ideal for fuse replacement, yet carry the UL 489 Listing that is required for branch circuit applications. See specifications on Table 2 for dimensions, weights, and interrupting ratings.

Table 7: Specifications for UL 489 Listed 480Y/277 Vac C60 Circuit Breakers

Interruption Rating	2P and 3P 1P	480Y/277 V @ 10kA 277 Vac @ 10kA
Amperage	0.5 A through 20 A	
Construction	1P, 2P and 3P	
Magnetic Trip Curves	C-curve D-curve	7 to 10 Times Ampere Rating 10 to 14 Times Ampere Rating
UL 486E Listed 2-Barrel Lug	18–16 AWG (1–1.5 mm^2), Cu Only Stranded Wire: 14–10 AWG (2–5 mm^2), Cu Only Solid or Stranded Wire	Torque to 7 lb-in (0.68 N•m) Torque to 14 lb-in (1.6 N•m)
Ring Tongue Screw	5 mm	Torque to 18 lb-in (2 N•m)
Plug-On Auxiliary Modules With Mechanical Linkage:	MN Undervoltage Trip MX + OF Shunt Trip/Auxiliary Switch OF Auxiliary Switch SD Alarm Switch	
Mounting	35 mm DIN Rail	
See selection Table 2 for dimensions, weights, and interrupting ratings.		

Benefits

- Satisfies customer's preferences to use circuit breakers instead of fuses.
- Eliminates costs of spare fuses, blown fuse indicators, additional wiring, etc.
- Reduces concerns and uncertainty of misapplying a UL 1077 supplementary protector where a UL 489 branch circuit breaker is required.
- Facilitates one common design for UL 489, CSA and IEC applications.
- Simplifies installation with a compact, DIN-mounted circuit breaker that accepts a wide range of accessories.
- Offers alternative terminations for ring terminals or cable.

Standard Features

- Fast closing: Allows increased withstand to the high inrush currents of some loads.
- Trip-free mechanism: Contacts cannot be held in the I-ON position when the circuit breaker is tripped automatically.
- Positive indication of contact disconnect. Green mechanical indication on front face of device shows that all poles are open.
- C curve: Overcurrent protection for all application types. Magnetic release operates from 7 to 10 times ampere rating. (7 to 14 for dc)
- D curve: Overcurrent protection for loads with high inrush currents (motors, transformers). Magnetic release operates between 10 and 14 times ampere rating (no dc rating for D curve).
- Suitable for reverse feeding
- Allows locking in O-OFF position using padlock attachment.

© 2002–2008 Schneider Electric All Rights Reserved

Connections

Two versions of field wiring connectors are available:

- Two-barrel lug with binding screws for two 18–10 AWG wires.
- Crimp-type ring tongue terminal for up to 8 AWG wire

Both of these terminals provide fingersafe ingress protection per IP20 of IEC EN60529. This feature reduces the potential of incidental contact with live circuit breaker components.

Standards

- UL 489 Listed
- CSA C22.2 No. 5.1
- IEC 60947-2
- CE Marked

Catalog Numbers

Table 8: Catalog Numbers for UL 489 Listed 480Y/277 V C60 Miniature Circuit Breakers (AC)

Rating	2-Barrel Wire Lug			Ring-Tongue Terminal		
	1P	2P	3P	1P	2P	3P
C-curve, 7–10 Times Ampere Rating						
0.5 A	MGN61300	—	—	MGN61366	—	—
1 A	MGN61301	MGN61312	MGN61323	MGN61367	MGN61378	MGN61389
2 A	MGN61302	MGN61313	MGN61324	MGN61368	MGN61379	MGN61390
3 A	MGN61303	MGN61314	MGN61325	MGN61369	MGN61380	MGN61391
4 A	MGN61304	MGN61315	MGN61326	MGN61370	MGN61381	MGN61392
5 A	MGN61305	MGN61316	MGN61327	MGN61371	MGN61382	MGN61393
6 A	MGN61306	MGN61317	MGN61328	MGN61372	MGN61383	MGN61394
8 A	MGN61307	MGN61318	MGN61329	MGN61373	MGN61384	MGN61395
10 A	MGN61308	MGN61319	MGN61330	MGN61374	MGN61385	MGN61396
15 A	MGN61309	MGN61320	MGN61331	MGN61375	MGN61386	MGN61397
20 A	MGN61310	MGN61321	MGN61332	MGN61376	MGN61387	MGN61398
D-curve, 10–14 Times Ampere Rating						
0.5 A	MGN61333	—	—	MGN61399	—	—
1 A	MGN61334	MGN61345	MGN61356	MGN61400	MGN61411	MGN61422
2 A	MGN61335	MGN61346	MGN61357	MGN61401	MGN61412	MGN61423
3 A	MGN61336	MGN61347	MGN61358	MGN61402	MGN61413	MGN61424
4 A	MGN61337	MGN61348	MGN61359	MGN61403	MGN61414	MGN61425
5 A	MGN61338	MGN61349	MGN61360	MGN61404	MGN61415	MGN61426
6 A	MGN61339	MGN61350	MGN61361	MGN61405	MGN61416	MGN61427
8 A	MGN61340	MGN61351	MGN61362	MGN61406	MGN61417	MGN61428
10 A	MGN61341	MGN61352	MGN61363	MGN61407	MGN61418	MGN61429
15 A	MGN61342	MGN61353	MGN61364	MGN61408	MGN61419	MGN61430
20 A	MGN61343	MGN61354	MGN61365	MGN61409	MGN61420	MGN61431

© 2002–2008 Schneider Electric All Rights Reserved

LC1D09

LC1D093

LC1D115

LC1DT20

3-Pole Contactors with AC and DC Operating Coils

Maximum Horsepower Ratings						Maximum Current		Auxiliary Contacts Built In		Catalog Number ▲■	AC Control Price	DC Control Price
Single Phase		Three Phase				Inductive AC3 Amperes	Resistive AC1 Amperes	N.O.	N.C.			
115 V hp	230 V hp	200 V hp	230 V hp	460 V hp	575 V hp							
0.5	1	2	2	5	7.5	9	20	1	1	LC1D09	**$ 94.**	**$119.**
1	2	3	3	7.5	10	12	25	1	1	LC1D12	**119.**	**149.**
1	3	5	5	10	15	18	32	1	1	LC1D18	**136.**	**160.**
2	3 5	7.5 10	7.5 10	15 20	20 30	25 32	40 50	1 1	1 1	LC1D25 LC1D32	**151.** **172.**	**181.** **213.**
3	5 7.5	10 15	10 15	30 40	30 40	40 50	60 70	1 1	1 1	LC1D40 LC1D50	**218.** **234.**	**275.** **291.**
5	10	20	20	50	50	65	80	1	1	LC1D65	**322.**	**379.**
7.5	15	30	30	60	60	80	110	1	1	LC1D80	**363.**	**420.**
. . .	. . .	30	40	75	100	115	175	1	1	LC1D115	**479.**	**479.**
. . .	. . .	40	50	100	125	150	200	1	1	LC1D150	**696.**	**696.**

4-pole Contactors with AC and DC Operating Coils

Maximum Current Utilization Categories	Number of Poles		Instantaneous Auxiliary Contacts		Catalog Number ▲■	AC Control Price	DC Control Price
AC-1	N.O.	N.C.	N.O.	N.C.			
20	4	0	1	1	LC1DT20	**$ 94.**	**$119.**
	2	2	1	1	LC1D098	**94.**	**119.**
25	4	0	1	1	LC1DT25	**119.**	**149.**
	2	2	1	1	LC1D128	**119.**	**149.**
32	4	0	1	1	LC1DT32	**149.**	**183.**
	2	2	1	1	LC1D188	**149.**	**183.**
40	4	0	1	1	LC1DT40	**193.**	**240.**
	2	2	1	1	LC1D258	**193.**	**240.**
60	4	0	1	1	LC1D40004	**296.**	**. . .**
	4	0	1	1	LP1D40004	**. . .**	**353.**
	2	2	1	1	LC1D40008	**296.**	**. . .**
	2	2	1	1	LP1D40008	**. . .**	**353.**
80	4	0	0	0	LC1D65004	**446.**	**. . .**
	4	0	0	0	LP1D65004	**. . .**	**503.**
	2	2	0	0	LC1D65008	**446.**	**. . .**
	2	2	0	0	LP1D65008	**. . .**	**503.**
125	4	0	0	0	LC1D80004	**489.**	**. . .**
	4	0	0	0	LP1D80004	**. . .**	**524.**
	2	2	0	0	LC1D80008	**489.**	**. . .**
	2	2	0	0	LP1D80008	**. . .**	**524.**
200	4	0	0	0	LC1D115004	**630.**	**630.**

▲ Use voltage codes from the "Voltage Codes" table below to complete the catalog number.
■ Contactor supplied with touch safe cable clamps. For ring terminal configuration on LC.D09–D32 and LC.DT20–DT40 contactors only, add "6" before coil voltage suffix. For spring terminal configuration add "3" before coil voltage suffix. No price adder for these modifications.

Voltage Codes (D-Line Only)▼

Contactor	Hz	24 V	48 V	110 V	120 V	125 V	208 V	220 V	240 V	250 V	440 V	480 V	600 V
AC													
LC1D40–LC1D150 only (see notes)	50	B5	E5	F5	. . .	. . .	. . .	M5★	U5	. . .	. . .	. . .	. . .
	60	B6	E6	F6	G6	. . .	L6	M6	U6	. . .	. . .	T6	X6♦
All (see notes)	50/60	B7	E7	F7	G7	. . .	LE7	M7	U7	. . .	. . .	T7★	X7★
DC (D09–D32, D115 and D150 coils with integral suppression device are fitted as standard)													
D09–D32 Low Consumption	. . .	BL	EL	FL	. . .	. . .	. . .	ML	. . .	UL	. . .	. . .	. . .
All	. . .	BD	ED	FD	. . .	GD	. . .	MD	. . .	UD	RD	. . .	. . .

♦ Not available for LC1D115 and LC1D150.
★ Not available for LC1D40–LC1D150.
▼ Other voltages available. See page 16-17.

Dimensions . . . . . pages 16-24–16-32
Overload Relays . . . . . pages 16-19–16-20
Accessories . . . . . pages 16-6–16-13
Replacement Coils . . . . . pages 16-15–16-18

For additional information on D-Line contactors, reference Catalog #8502CT9901R5/03.

© 2004 Schneider Electric
All Rights Reserved
4/1/04

ALTISTART® 48 Soft Starts

ALTISTART® 48 Family

ALTISTART® 48 Soft Starts

The ALTISTART 48 soft start offers advanced electronic soft start, soft stop performance through the exclusive torque control system (TCS). By controlling motor torque, the ALTISTART 48 soft start provides enhanced control for a wide variety of applications versus traditional voltage ramp or current limit soft starters. TCS optimizes ramp control during soft starting and stopping, minimizes motor temperature during acceleration and requires minimal adjustment for most applications. With TCS, unscheduled downtime is reduced, and motor and machine life extended.

Additional advanced features of the ALTISTART 48 soft start, including PTC probe motor protection, POWERSUITE™ software and MODBUS® protocol, meet the high demands of automated facilities for advanced motor protection and communication capabilities. The compact ALTISTART 48 accommodates ranges for low powered (2 to 1200 hp) and low voltage (208 V to 575 V) motors.

Key Benefits

Torque Control System

- Torque control system (TCS) provides linear acceleration and deceleration independent of motor loading.
- Controlled acceleration for high inertia loads and air supply fans.
- Provides the ability to control motors oversized for applications by up to 30%.

Ease of use

- Dual ramp makes external changeover circuit unnecessary.
- Factory settings conform to a majority of installations without adjustment.
- Preset for quick and easy set-up and installation.
- PC commissioning software provides an intuitive graphical method of testing and commissioning.
- Digital keypad allows quick modification of factory settings, accurate setting, and prediction of acceleration and deceleration times, start configuration and motor performance monitoring.

Reliability

- Meets UL requirement for motor overload and ground fault protection without extra options.
- Designed to conform to the electromagnetic compatibility (EMC) standards for immunity, including IEC 801-2 Level 3, IEC 801-3 Level 3, IEC 801-4 Level 4 and IEC 801-5 Level 3.
- Meets more applications – a pump-specific version is not required to handle water hammer problems.

Ease of Selection

- Available in 21 current ratings from 17 to 1200 A.
- ±5% frequency tolerance for Class 3 Generator market reduces nuisance tripping.
- One ALTISTART 48 available for every standard motor rating from 10 to 1000 hp at 460 VAC.
- All motor loads rated for use at 208, 230, 380, 460 or 575 VAC at 50 or 60 Hz are self-adjusting for greater flexibility.

Options

- Operator interface developed for quick and easy programming and real-time monitoring of motor and soft start performance
- Remote mount kit
- POWERSUITE™ products for easy testing and commissioning
- Remote terminal option available for increased input and output capability
- Communication options include:
  - Web-based Ethernet
  - FIPIO
  - MODBUS® Plus
  - DEVICENET™

SQUARE D
Schneider Electric

Details Make a Difference — ALTISTART® 48 Soft Starts

- Performance with exclusive torque control system (TCS)
- 30% smaller than the ALTISTART 46
- 208 to 575 V
- Three seven-segment displays
- IP20 and IP00 design
- Thermal protection by I^2t calculation
- Thermal protection with PTC probes
- Simplified wiring with top and bottom connections
- Integrated MODBUS® Protocol
- RJ45 “RS 485” communication port
- POWERSUITE™ software
- Three current sensors
- Overload detection function
- Bypass available on all ratings
- Automatic restart
- Integrated functional keypad
- SCRs designed with 1800 V PIV ratings
- Frequency tolerance ±5%
- Rated up to 60°C

Selection Guide — ALTISTART® 48 Soft Starts

Open Style Soft Starters 50/60 Hz, Three Phase, 208/575 V Maximum

	Motor (Maximum Power)					
Standard Duty						
208 V HP	**230 V HP**	**400 V kW**	**460 V HP**	**575 V HP**	**Rated Amps**	**Catalog Number**
3	5	7.5	10	15	17	ATS48D17Y
5	7.5	11	15	20	22	ATS48D22Y
7.5	10	15	20	25	32	ATS48D32Y
10	–	18.5	25	30	38	ATS48D38Y
–	15	22	30	40	47	ATS48D47Y
15	20	30	40	50	62	ATS48D62Y
20	25	37	50	60	75	ATS48D75Y
25	30	45	60	75	88	ATS48D88Y
30	40	55	75	100	110	ATS48C11Y
40	50	75	100	125	140	ATS48C14Y
50	60	90	125	150	170	ATS48C17Y
60	75	110	150	200	210	ATS48C21Y
75	100	132	200	250	250	ATS48C25Y
100	125	160	250	300	320	ATS48C32Y
125	150	220	300	350	410	ATS48C41Y
150	–	250	350	400	480	ATS48C48Y
–	200	315	400	500	590	ATS48C59Y
200	250	355	500	600	660	ATS48C66Y
250	300	400	600	800	790	ATS48C79Y
350	350	500	800	1000	1000	ATS48M10Y
400	450	630	1000	1200	1200	ATS48M12Y

Specifications — ALTISTART® 48 Soft Starts

Environment

Degree of protection	IP20 for ATS48 D17Y to C11Y IP00 for ATS48 C14Y to M12Y
Shock resistance	Conforms to IEC 60068-2-27: 15 g, 11 ms
Vibration resistance	Conforms to IEC 60068-2-6, NCF 20706 and BV1: 1.5 mm peak from 2 to 13 Hz 1 gn from 13 to 200 Hz
Starter audible noise level	Audible noise measurements taken 1 m away. The noise levels may change depending on the fan characteristics: ATS48D17Y to D47Y: 52 dBA ATS48D62Y to C11Y: 58 dBA ATS48C14Y to C17Y: 50 dBA ATS48C21Y to C32Y: 54 dBA ATS48C41Y to C66Y: 55 dBA ATS48C79Y to M12Y: 60 dBA
Resistance to electrostatic discharges	Conforms to IEC 61000-4-2, Level 3
Immunity to radio-electric interference	Conforms to IEC 61000-4-3, Level 3
Immunity to rapid electrical transients	Conforms to IEC 6100-4-4, Level 4
Ambient air temperature	Storage: -13 to +158°F (-25 to +70°C) Operation: 14 to +104°F (-10°C to +40°C) without derating 14 to +122°F (-10°C to +50°C) with user provided shorting/bypass contactor without derating Up to +140°F (+60°C), derate the current by 2% for each°C above 40°C
Maximum relative humidity	95% without condensation or dripping water conforming to IEC 60068-2-3
Maximum ambient pollution	Conforms to IEC 60664-1, Pollution Degree 3
Maximum operating altitude	3,300 ft. without derating Above this, derate the nominal current by 2.2% for each additional 100 m to a maximum of 2000 m
Operating position	Maximum inclination ±10° with respect to vertical

Electrical Characteristics

Operating category	Conforms to IEC 60947-4-2, AC-53a
Three-phase supply voltage	208 VAC -15% to 690 VAC +10%, 50/60 Hz
Frequency	Automatic sensing (preset), ±5%: • 60 Hz: 56.6 to 63.8 Hz • 50 Hz: 47.6 to 52.6 Hz Manual selection, ±20%: • 50 Hz: 40 to 60 Hz • 60 Hz: 48 to 72 Hz
Rated current (ICL)	17 to 1200 A (21 device ratings)
SCRs	1800 V peak inverse voltage (PIV) rating
Motor power	2 to 1200 hp
Motor voltage	208, 230, 400, 460, 575 and 690 VAC
Starter control circuit supply voltage	110 VAC -15% to 230 VAC, +10% 50/60 Hz
Maximum control circuit consumption (with fans operating)	ATS48D17Y to C17Y: 30W ATS48C21Y to C32Y: 50W ATS48C41Y to M12Y: 80W
Protection	• Integrated thermal I^2t protection for motor (Class 2, 10, 10A, 15, 20, 25, 30 or no protection) and/or thermal protection with PTC probes • Motor underload settings • Current overload settings • Phase reversal • Phase loss • Automatic restart

Electromagnetic Compatibility (EMC) [1]

	Standards	Test Levels	Examples (sources of interference)
Immunity tests	IEC 61000-4-2, Level 3 Electrostatic discharge: • through contact • through air	 6 kV 8 kV	 Contact off an electrically charged individual
	IEC 61000-4-3, Level 3 Radiated electromagnetic fields	10 V/m	Equipment transmitting radio frequencies
	IEC 61000-4-4, Level 4 Rapid electrical transients: • Power supply cables • Control supply cables	 4 kV 2 kV	 Opening/closing of a contactor
	IEC 61000-4-5, Level 3 Shock wave: • Phase to phase • Phase to ground	 1 kV 2 kV	
	IEC 61000-4-12, Level 3 Damped oscillating waves	1 kV - 1 MHz	Oscillating circuit on the line supply
Radiated and conducted emissions	IEC 60947-4-2, Class A		
	IEC 60947-4-2, Class B on starters up to 170A (ATS48D17Y to C17Y) Shorting/bypass contactors must be utilized.		

[1] The starters conform to IEC 60947-4-2 (EMC). This standard ensures a level of immunity for products and a level of emitted interference.

Dimensions and Weights — ALTISTART® 48 Soft Starts

	Width (inches)	Height (inches)	Depth (inches)	Weight (lbs.)
Size 1				
ATS48D17Y ATS48D22Y ATS48D32Y ATS48D38Y ATS48D47Y	6.30	10.83	7.48	10.8
Size 2				
ATS48D62Y ATS48D75Y ATS48D88Y ATS48C11Y	7.48	11.42	9.25	18.3
Size 3				
ATS48C14Y ATS48C17Y	7.87	13.39	10.43	27.3
Size 4				
ATS48C21Y ATS48C25Y ATS48C32Y	12.60	14.96	10.43	40.1
Size 5				
ATS48C41Y ATS48C48Y ATS48C59Y ATS48C66Y	15.75	26.38	11.81	113.3
Size 6				
ATS48C79Y ATS48M10Y ATS48M12Y	30.31	35.04	12.40	253.6

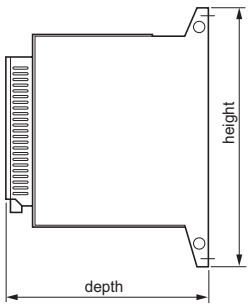

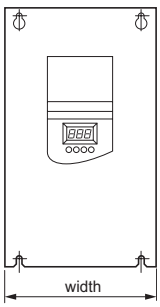

Order Number 8800SM0101SR3/03

© 2003 Schneider Electric All Rights Reserved

SQUARE D
Schneider Electric

Visit the SQUARE D Web site at www.SquareD.com

The Type T units are designed for the global market and are the best choice when size and cost are of concern. This is our most popular and complete offering of industrial control transformers, and includes the following features:

- 50/60 Hz rated
  Customer installed accessories (finger-safe covers, fuse blocks, fuse clips)
- Type T transformers are designed with the various temperature classes:
  50–150 VA with a 55° C temperature rise, 105° C insulation
  200–350 VA with a 80° C temperature rise, 130° C insulation
  500–5000 VA with a 115° C temperature rise, 180° C insulation

Square D manufactures a wide variety of voltage combinations for control transformers. The voltage combinations are expressed as "Voltage Codes" and these codes are embedded within the catalog number of the transformer. Standard codes are listed, if the voltage combination you require is not listed, call your Square D Distributor for assistance.

Key to Price Column Headings

Voltage Code
Primary Voltages
Secondary Voltages
Key for Dimensions & Accessory

Type T

UL/CSA/ NOM VA	CE VA	Type	D1 240 x 480 120 I	D31 240 x 480 120/240 I	D5 600 120 I	D37 600 120/240 I	D24 120 120 I	D55 120 x 240 120/240 I	D3 208 120 I	D4 277 120 I	D51 208/277 120 I	D60 277 120/240 I
25	25	T25	$ 34.70	n/a	n/a	n/a	n/a	n/a	n/a	n/a	n/a	n/a
50	50	T50	36.50	$ 59.00	$ 42.40	$147.00	$147.00	$147.00	$ 42.40	$ 42.40	$147.00	$147.00
75	75	T75	43.30	62.00	51.00	153.00	153.00	153.00	51.00	51.00	153.00	153.00
100	100	T100	48.50	65.00	57.00	154.00	154.00	154.00	57.00	57.00	154.00	154.00
150	150	T150	52.00	86.00	72.00	164.00	164.00	164.00	72.00	72.00	164.00	164.00
200	200	T200	64.00	111.00	92.00	224.00	224.00	224.00	92.00	92.00	224.00	224.00
250	160	T250	75.00	117.00	114.00	225.00	225.00	225.00	114.00	114.00	225.00	225.00
300	200	T300	83.00	137.00	117.00	227.00	227.00	227.00	117.00	117.00	227.00	227.00
350	250	T350	88.00	143.00	136.00	228.00	228.00	228.00	136.00	136.00	228.00	228.00
500	300	T500	110.00	160.00	148.00	235.00	235.00	235.00	148.00	148.00	235.00	235.00
750	500	T750	152.00	223.00	209.00	264.00	264.00	264.00	209.00	209.00	264.00	264.00
~~1000~~	~~630~~	~~T1000~~	~~184.00~~	263.00	263.00	280.00	280.00	280.00	263.00	263.00	280.00	280.00
1500	1000	T1500	263.00	385.00	368.00	404.00	404.00	404.00	368.00	368.00	404.00	404.00
~~2000~~	~~1500~~	~~T2000~~	~~320.00~~	427.00	427.00	438.00	438.00	438.00	427.00	427.00	438.00	438.00
3000	2000	T3000	444.00	701.00	602.00	749.00	749.00	749.00	602.00	602.00	749.00	749.00
5000	3000	T5000	746.00	948.00	948.00	948.00	948.00	948.00	948.00	948.00	948.00	948.00

Type T

UL/CSA/ NOM VA	CE VA	Type	D2 240 x 480 24 I	D59 240 x 480 12/24 I	D13 120 12/24 I	D23 120/240 24 I	D54 120/240 12/24 I	D14 208 24 I	D25 277 24 I	D36 600 12/24 I
50	50	T50	$ 42.40	$147.00	$ 42.40	$ 42.40	$147.00	$ 42.40	$147.00	$147.00
75	75	T75	51.00	153.00	51.00	51.00	153.00	51.00	153.00	153.00
100	100	T100	57.00	154.00	57.00	57.00	154.00	57.00	154.00	154.00
150	150	T150	72.00	164.00	72.00	72.00	164.00	72.00	164.00	164.00
200	200	T200	92.00	224.00	92.00	92.00	224.00	92.00	224.00	224.00
250	160	T250	114.00	225.00	114.00	114.00	225.00	114.00	225.00	225.00
300	200	T300	117.00	227.00	117.00	117.00	227.00	117.00	227.00	227.00
350	250	T350	136.00	228.00	136.00	136.00	228.00	136.00	228.00	228.00
500	300	T500	148.00	235.00	148.00	148.00	235.00	148.00	235.00	235.00
750	500	T750▲	209.00	264.00	209.00	209.00	264.00	209.00	264.00	264.00
1000	630	T1000▲	263.00	280.00	263.00	263.00	280.00	263.00	280.00	280.00

Type T

UL/CSA/NOM VA	CE VA	Type	D15 240 x 480 24/120 I	D12 480 240 I	D22 480 277 I	D62 600 240 I
50	50	T50	$ 42.40	$ 42.40	$147.00	$147.00
75	75	T75	51.00	153.00	153.00	153.00
100	100	T100	65.00	57.00	154.00	154.00
150	150	T150	72.00	72.00	164.00	164.00
200	200	T200	92.00	92.00	224.00	224.00
250	160	T250	117.00	114.00	225.00	225.00
300	200	T300	137.00	117.00	227.00	227.00
350	250	T350	143.00	136.00	228.00	228.00
500	300	T500	160.00	148.00	235.00	235.00
750	500	T750	223.00	209.00	264.00	264.00
1000	630	T1000	263.00	263.00	280.00	280.00
1500	1000	T1500	385.00	368.00	404.00	404.00
2000	1500	T2000	427.00	427.00	438.00	438.00
3000	2000	T3000	701.00	602.00	749.00	749.00
5000	3000	T5000	948.00	948.00	948.00	948.00

Listing	File	Type
UL	E61239	T25–T1000
CSA	LR37055, Guide 184-N-90, C22.2	T25–T1000
cULus	E61239	T1500–T5000
EN (CE)	947923, EN-61558-1 (TUV ref: 00941-RAG/sg E9371495E01)	T25–T200
	9579078, EN-61558-1 (TUV ref: 00941-RAG/sg E9471921.02E01)	T250–T1000
	9579078, EN-61558-1 (TUV ref: 00941-RAG/sg E9471921.02E01)	T1500–T5000

▲ See Control Transformer Catalog: 9070CT9901 for dimensions different than Digest.

© 2003 Schneider Electric
All Rights Reserved
9/8/03

TeSys® DF Fuseholders

Provides simple and effective protection in a modular style

For protection of low voltage equipment against potentially damaging short circuits, fuses are a simple and effective solution to reduce risk of equipment damage. TeSys® DF Fuseholders by Schneider Electric provide the flexibility to integrate Class CC fuses into your applications.

TeSys fuseholders offer a compact, modular configuration that are DIN rail mountable. For increased focus on worker safety, their fingersafe design meets IP-20 grade protection for compliance with IEC standards.

The modular design meets a wide variety of application needs, including single pole, single pole + neutral, 2 pole, 3 pole, 3 pole + neutral, with various cylindrical cartridge fuse sizes available.

Key Features:

- Version for Class CC fuses
- Fuses from 0.5A to 125A
- Cylindrical cartridge fuses: 8x32, 10x38, 14x51 and 22x58 up to 690V, from 0.5 to 125Amps
- LED blown fuse indicator
- Din rail mountable
- High breaking capacity 120kA / 500V and 80kA / 690V
- Multi-pole configurations 1P, N, 1P+N, 2P, 3P, 3P+N
- Certifications: IEC 60947-3, UL512 and CSA, RoHS compliant
- Protection against direct finger contact

Make the most of your energy℠

Schneider Electric

TeSys® DF Fuseholders

Fuseholders[1]				
Conventional Thermal Current (Ith)	Size of Cartridge Fuse or Link	Composition P=Poles	Sold in Lots of	Catalog Number
30 A	Class CC	1 P	12	DFCC1
		2 P	6	DFCC2
		3 P	4	DFCC3
Fuseholders with "Blown Fuse" Indicators (neon) (1)				
30 A	Class CC	1 P	12	DFCC1V
		2 P	6	DFCC2V
		3 P	4	DFCC3V

Fuseholders[1]				
Conventional Thermal Current (Ith)	Size of Cartridge Fuse or Link mm (inch)	Composition P=Poles N=Neutral	Sold in Lots of	Catalog Number
25 A	8.5 x 31.5 (0.3 x 1.2)	1 P	12	DF81
		N	12	DF10N
		1 P + N[2]	6	DF81N
		2 P	6	DF82
		3 P	4	DF83
		3 P + N[2]	3	DF83N
32 A	10 x 38 (0.4 x 1.5)	1 P	12	DF101
		N	12	DF10N
		1 P + N[2]	6	DF101N
		2 P	6	DF102
		3 P	4	DF103
		3 P + N[2]	3	DF103N
50 A	14 x 51 (0.6 x 2.0)	1 P	6	DF141
		N	6	DF14N
		1 P + N[2]	3	DF141N
		2 P	3	DF142
		3 P	2	DF143C[3]
		3 P + N[2]	1	DF143NC[3]
125 A	22 x 58 (0.9 x 2.3)	1 P	6	DF221
		N	6	DF22N
		1 P + N[2]	3	DF221N
		2 P	3	DF222
		3 P	2	DF223[3]
		3 P + N[2]	1	DF223NC[3]

Fuseholders with "blown fuse" indicators (neon)[1, 4]				
Conventional Thermal Current (Ith)	Size of Cartridge Fuse or Link mm (inch)	Composition P=Poles N=Neutral	Sold in Lots of	Catalog Number
25 A	8.5 x 31.5 (0.3 x 1.2)	1 P	12	DF81V
		1 P + N[2]	6	DF81NV
		2 P	6	DF82V
		3 P	4	DF83V
		3 P + N[2]	3	DF83NV
32 A	10 x 38 (0.4 x 1.5)	1 P	12	DF101V
		1 P + N[2]	6	DF101NV
		2 P	6	DF102V
		3 P	4	DF103V
		3 P + N[2]	3	DF103NV
50 A	14 x 51 (0.6 x 2.0)	1 P	6	DF141V
		1 P + N[2]	3	DF141NV
		2 P	3	DF142V
		3 P	2	DF143VC[3]
		3 P + N[2]	1	DF143NVC[3]
125 A	22 x 58 (0.9 x 2.3)	1 P	6	DF221V
		1 P + N[2]	3	DF221NV
		2 P	3	DF222V
		3 P	2	DF223VC[3]
		3 P + N[2]	1	DF223NVC[3]

Put our expertise to work for you.

For more information on Schneider Electric fuseholder solutions, visit us online at **www.Schneider-Electric.us** or talk to one of our experts at **1-888-778-2733**.

1 Each pole can be marked. A clip-in marker holder is provided for this purpose. Clip-in markers type AB1 R• or AB1 G• can also be used.

2 N: neutral pole fitted with a locked tubular link as standard.

3 A letter "C" in the catalog number indicates that the fuseholder can be fitted with auxiliary early break, "blown fuse" signaling and "fuse present" signaling contacts.

4 Operator voltage of the blown fuse indicator: 110V…690V.

Schneider Electric - North American Operating Division

1415 S. Roselle Road
Palatine, IL 60067
Tel: 847-397-2600
Fax: 847-925-7500

This document has been printed on recycled paper

©2009 Schneider Electric. All rights reserved.

Class CC Rejection-Type Fuses

FNQ-R

Time-Delay, Rejection Type
Branch Circuit Fuse
Class CC
Physical Size:
13/32″ × 1½″ (10.3mm × 38.1mm)
Construction: Melamine Tube
Ampere Ratings: ¼-30A.
Voltage Rating: 600Vac or less
Interrupting Rating: 200,000A RMS Sym.
Agency Information: Std. 248-4, Class CC
UL Listed, Guide JDDZ, File E4273
CSA Certified, Class 1422-01, File 53787

Catalog Symbol & Current Ratings

600Vac		
FNQ-R-¼	FNQ-R-1 6/10	FNQ-R-7
FNQ-R-3/10	FNQ-R-1 8/10	FNQ-R-7½
FNQ-R-4/10	FNQ-R-2	FNQ-R-8
FNQ-R-½	FNQ-R-2¼	FNQ-R-9
FNQ-R-6/10	FNQ-R-2½	FNQ-R-10
FNQ-R-¾	FNQ-R-2 8/10	FNQ-R-12
FNQ-R-8/10	FQN-R-3	FNQ-R-15
FNQ-R-1	FNQ-R-3 2/10	FNQ-R-17½
FNQ-R-1⅛	FNQ-R-3 1/20	FNQ-R-20
FNQ-R-1¼	FNQ-R-4	FNQ-R-25
FNQ-R-1 3/10	FNQ-R-5	FNQ-R-30
FNQ-R-1 4/10	FNQ-R-6	—
FNQ-R-1½	FNQ-R-6¼	—

Time-Current Curves on page 225.

CE CE logo denotes compliance with European Union Low Voltage Directive (50-1000Vac, 75-1500Vdc). Refer to Data Sheet: 8002 or contact Bussmann Application Engineering at 636-527-1270 for more information.

Data Sheet: 1014

KTK-R Limitron® Fuse

Fast Acting; Branch Circuit Fuse
Class CC - Rejection Feature
Physical Size:
13/32″ × 1½″ (10.3mm × 38.1mm)
Construction: Melamine Tube
Ampere Ratings: 1/10-30A.
Voltage Rating: 600Vac (or less).
Interrupting Rating: 200,000A RMS Sym.
Agency Information: Std. 248-4, Class CC
UL Listed, Guide JDDZ, File E4273
CSA Certified, File 53787, Class 1422-02

Catalog Symbol & Current Ratings

600Vac		
KTK-R-1/10	KTK-R-1	KTK-R-7
KTK-R-⅛	KTK-R-1½	KTK-R-8
KTK-R-2/10	KTK-R-2	KTK-R-9
KTK-R-¼	KTK-R-2½	KTK-R-10
KTK-R-3/10	KTK-R-3	KTK-R-12
KTK-R-4/10	KTK-R-3½	KTK-R-15
KTK-R-½	KTK-R-4	KTK-R-20
KTK-R-6/10	KTK-R-5	KTK-R-25
KTK-R-¾	KTK-R-6	KTK-R-30

Time-Current Curves on page 226.

CE CE logo denotes compliance with European Union Low Voltage Directive (50-1000Vac, 75-1500Vdc). Refer to Data Sheet: 8002 or contact Bussmann Application Engineering at 636-527-1270 for more information.

Data Sheet: 1015

Recommended fuseblocks/fuseholders for Class CC 600V fuses

- Open fuseblocks - see page 64
- Finger-safe fuseholders - see pages 41-44, 65
- Panel-mount fuseholders - see page 78
- In-line fuseholders - see page 80

Non-Illuminated 3 Position Selector Switch Operators—UL Types 4, 4X, 13/NEMA 4, 4X, 13

For use in hazardous locations—See page 17-79.
Legend plate and contact block not included unless noted.

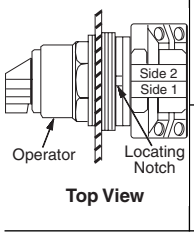

Top View

CONTACT BLOCK REQUIRED			1 — Contact Closed 0 — Contact Open								
Contact Block Position	Quantity and Type	Mount on Side	Center Left Right	Center Left Right	Center Left Right	Center Left Right	Center Left Right	Center Left Right	Center Left Right	Center Left Right	Center Left Right
KA1 or KA3	KA3 #2	KA1 #2	1 0 0	1 0 0	0 0 1	1 0 0	1 0 0	1 0 0	1 0 0	0 1 0	1 1 0
KA2	KA2 #2		0 1 1	0 0 1	0 1 0	0 1 0	0 0 1	0 1 1	0 1 1	1 0 0	0 0 1
KA1 or KA3	KA3 #1	KA1 #1	0 0 1	1 0 0	0 0 1	1 0 0	0 1 0	0 0 1	1 0 1	0 0 1	0 1 1
KA2	KA2 #1		1 1 0	0 0 1	0 1 0	0 1 0	0 0 1	1 0 0	0 1 0	0 1 0	1 0 0

Cam (see page 17-64)	B	C	D	E	F	G	J	L	M	
Non-Illuminated Operators	**Type**	**Type**	**Type**	**Type**	**Type**	**Type**	**Type**	**Type**	**Type**	**Price**
Manual Return										
Operator Only ▲										
Without Knob	SKS42	SKS43	SKS44	SKS45	SKS46	SKS47	SKS49	SKS401	SKS402	**$28.50**
With Standard Black Knob	SKS42B	SKS43B	SKS44B	SKS45B	SKS46B	SKS47B	SKS49B	SKS401B	SKS402B	**35.10**
With Other Color Knob (See Knob Table) ■	SKS42■	SKS43■	SKS44■	SKS45■	SKS46■	SKS47■	SKS49■	SKS401■	SKS402■	**35.10**
With Contact Block(s)										
With Standard Black Knob (From Table for Other Colors, Replace B in Type Number with Color Code)										
With 1 KA1 on side #2	SKS42BH13	SKS43BH13	SKS44BH13	SKS45BH13	SKS46BH13	SKS47BH13	SKS49BH13	SKS401BH13	SKS402BH13	**64.00**
With 1 KA1 on side #1	SKS42BH1	SKS43BH1	SKS44BH1	SKS45BH1	SKS46BH1	SKS47BH1	SKS49BH1	SKS401BH1	SKS402BH1	**64.00**
With 1 KA1 on side #1 and 1 KA1 on side #2 (H2)	SKS42BH2	SKS43BH2	SKS44BH2	SKS45BH2	SKS46BH2	SKS47BH2	SKS49BH2	SKS401BH2	SKS402BH2	**92.00**
Spring Return from Left to Center										
Operator Only ▲										
Without Knob	SKS62	SKS63	SKS64	SKS65	SKS66	SKS67	SKS69	SKS601	SKS602	**47.60**
With Standard Black Knob	SKS62B	SKS63B	SKS64B	SKS65B	SKS66B	SKS67B	SKS69B	SKS601B	SKS602B	**54.00**
With Other Color Knob (See Knob Table) ■	SKS62■	SKS63■	SKS64■	SKS65■	SKS66■	SKS67■	SKS69■	SKS601■	SKS602■	**54.00**
Spring Return From Right to Center										
Operator Only ▲										
Without Knob	SKS72	SKS73	SKS74	SKS75	SKS76	SKS77	SKS79	SKS701	SKS702	**47.60**
With Standard Black Knob	SKS72B	SKS73B	SKS74B	SKS75B	SKS76B	SKS77B	SKS79B	SKS701B	SKS702B	**54.00**
With Other Color Knob (See Knob Table) ■	SKS72■	SKS73■	SKS74■	SKS75■	SKS76■	SKS77■	SKS79■	SKS701■	SKS702■	**54.00**
Spring Return Both Sides to Center										
Operator Only ▲										
Without Knob	SKS52	SKS53	SKS54	SKS55	SKS56	SKS57	SKS59	SKS501	SKS502	**47.60**
With Standard Black Knob	SKS52B	SKS53B	SKS54B	SKS55B	SKS56B	SKS57B	SKS59B	SKS501B	SKS502B	**54.00**
With Other Color Knob (See Knob Table) ■	SKS52■	SKS53■	SKS54■	SKS55■	SKS56■	SKS57■	SKS59■	SKS501■	SKS502■	**54.00**

▲ These operators can be ordered complete with contact blocks. For maximum block usage, see page 17-85. Add the "H" number chosen from page 17-80 to the end of the operator type number and add the cost of the "H" number to the operator cost.
■ Add the color code as chosen from knob color table below.
EXAMPLE: SKS43■ with a green gloved-hand knob = SKS43FG.

Selector Switch Knobs

Standard Knob

Gloved-Hand Knob

Coin Operated

Color	■ Knob Code	Type	■ Knob Code	Type	■ Knob Code	Type	Price
Black	B	B11	FB	B25	TB	B18	
Red	R	R8	FR	R24	TR	R16	
Green	G	G8	FG	G24	TG	G16	
Yellow	Y	Y8	FY	Y24	TY	Y16	
Orange	S	S11	FS	S25	. . .	. . .	**$6.60**
Blue	L	L8	FL	L24	TL	L16	
White	W	W8	FW	W24	. . .	. . .	
Amber	A	A8	FA	A24	. . .	. . .	
Clear	C	C8	FC	C24	TC	C16	

For additional information, reference Catalog #9001CT0301.

© 2003 Schneider Electric
All Rights Reserved
9/8/03

XB4BA31

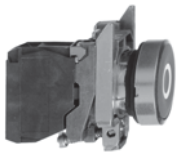

XB4BA4322

XB4BP51

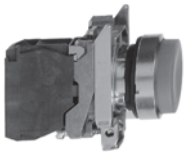

XB4BL42

XB4BC21

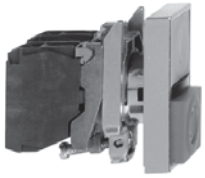

XB4BL845

Non-Illuminated Push Buttons, Momentary (screw clamp terminal connections)

Shape of Head	Type of Push	Type of Contact		Marking	Color of Cap	Catalog Number
		N/O	N/C			
	Flush	1	–	–	Black	**XB4BA21** (ZB4BZ101 + ZB4BA2)
					Green	**XB4BA31** (ZB4BZ101 + ZB4BA3)
					Yellow	**XB4BA51** (ZB4BZ101 + ZB4BA5)
					Blue	**XB4BA61** (ZB4BZ101 + ZB4BA6)
		–	1	–	Red	**XB4BA42** (ZB4BZ102 + ZB4BA4)
	Flush	1	–	"I" (white)	Green	**XB4BA3311** (ZB4BZ101 + ZB4BA331)
	Flush	–	1	"O" (white)	Red	**XB4BA4322** (ZB4BZ102 + ZB4BA432)
	Flush with clear silicone boot (color of pusher unobscured)	1	–	–	Black	**XB4BP21** (ZB4BZ101 + ZB4BP2)
					Green	**XB4BP31** (ZB4BZ101 + ZB4BP3)
					Yellow	**XB4BP51** (ZB4BZ101 + ZB4BP5)
					Blue	**XB4BP61** (ZB4BZ101 + ZB4BP6)
		–	1	–	Red	**XB4BP42** (ZB4BZ102 + ZB4BP4)
	Extended	–	1	–	Red	**XB4BL42** (ZB4BZ102 + ZB4BL4)
	Mushroom head Ø 40 mm	1	–	–	Black	**XB4BC21** (ZB4BZ101 + ZB4BC2)

Two Button Push Buttons, Momentary (screw clamp terminal connections)

Shape of Head	Type of Push	Type of Contact		Degree of Protection	Catalog Number
		N/O	N/C		
	One flush green push (marked "I") One extended red push (marked "O")	1	1	IP 40	**XB4BL845** (ZB4BZ105 + ZB4BL8434)

© 1999-2005 Schneider Electric All Rights Reserved

Pilot Lights—UL Types 4, 4X, 13/NEMA 4, 4X, 13

For use in hazardous locations—See page 17-79.
Legend plate not included.

Description		Voltage	Style	With Red Fresnel Color Cap	With Green Fresnel Color Cap	With Other Color Cap	Price	Without Color Cap	Price
9001SKP1	Standard Pilot Light (Non-metallic fresnel color cap shown)	110–120 V, 50–60 Hz	Transformer	SKP1R31	SKP1G31	SKP1■	**$102.**	SKP1	**$95.**
		220–240 V, 50–60 Hz	Transformer	SKP7R31	SKP7G31	SKP7■	**102.**	SKP7	**95.**
		24–28 Vac/dc	Full Voltage	SKP35R31	SKP35G31	SKP35■	**83.**	SKP35	**77.**
		For other voltages see Table ▲	Transformer, Flashing or LED♦	SKP▲R31	SKP▲G31	SKP▲■	**102.**	SKP▲	**95.**
			Full Voltage, Neon or Resistor★	SKP▲R31	SKP▲G31	SKP▲■	**83.**	SKP▲	**77.**
9001SKT1	Push-To-Test Pilot Light (Non-metallic fresnel color cap shown)	110–120 V, 50–60 Hz	Transformer	SKT1R31	SKT1G31	SKT1■	**131.**	SKT1	**123.**
		220–240 V, 50–60 Hz	Transformer	SKT7R31	SKT7G31	SKT7■	**131.**	SKT7	**123.**
		24–28 Vac/dc	Full Voltage	SKT35R31	SKT35G31	SKT35■	**111.**	SKT35	**105.**
		For other voltages see Table ▲	Transformer, Flashing or LED♦	SKT▲R31	SKT▲G31	SKT▲■	**131.**	SKT▲	**123.**
			Full Voltage, Neon or Resistor★	SKT▲R31	SKT▲G31	SKT▲■	**111.**	SKT▲	**105.**
9001SKTR38	Remote Test Pilot Light (Non-metallic fresnel color cap shown)	120 Vac Only	Resistor	SKTR38R31	SKTR38G31	SKTR38■	**131.**	SKTR38	**123.**
		24–28 Vac Only	Full Voltage	SKTR35R31	SKTR35G31	SKTR35■	**131.**	SKTR35	**123.**
		For other voltages see Tables ▲■▼	Full Voltage or Resistor ▼	SKTR▲R31	SKTR▲G31	SKTR▲■	**131.**	SKTR▲	**123.**
Pilot Light For Intrinsically Safe Circuits (NEMA 4X)	Intrinsically safe equipment must not release electrical or thermal energy capable of igniting certain explosive or combustible hazardous atmospheres, for which the equipment has been tested. These pilot lights are intrinsically safe when used with suitable approved barrier or barrier relay. These pilot lights are Factory Mutual (FM) approved. Consult your local Square D sales office for further details. These pilot lights are fully encapsulated—there are no replaceable parts—except for the SK40 ring nut. Use KN100 series plastic legend plates as shown on Pages 17-81 and 17-82.			KP44R	KP44G	KP44Y (Yellow Color Cap)	**119.**	. . .	. . .

Operating Voltage Range	Nominal Current	
20–30 Vac/dc	25 mA	V max = 32 V I max = 165 mA

▲ Add the voltage assembly code as chosen from table, page 17-77.
EXAMPLE: SKT▲R31 with 60 Vac red LED voltage = SKT37LRR31.
■ Add the color code as chosen from the color cap table below.
EXAMPLE: SKP1■ with a blue fresnel cap = SKP1L31.
♦ The cap must be the same color as the LED light module chosen, e.g., for green LED, use green color cap.
★ On neon light modules, use clear color caps only.
▼ Use only full voltage or resistor voltage assembly codes on remote test pilot lights. Do not choose LED, neon or transformer codes. For AC use only.

Color Caps

Color	■ Plastic Fresnel	■ Plastic Domed
Amber	A31	A9
Blue	L31	L9
Clear	C31	C9
Green	G31	G9
Red	R31	R9
White	W31	W9
Yellow	Y31	Y9

Typical Wiring Diagram

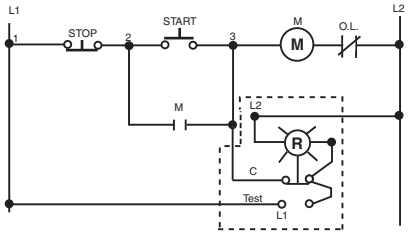

Push-To-Test Pilot Light

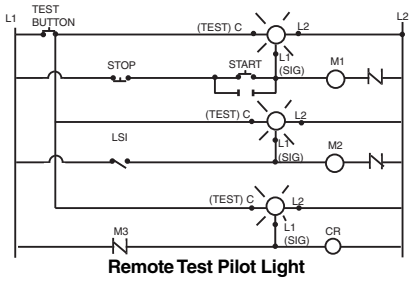

Remote Test Pilot Light

Light Modules . . . . . page 17-77
Contact Blocks. . . . . page 17-78
H Contact Block Assembly Codes . . . . . page 17-80
Legend Plates . . . . . page 17-81
Accessories . . . . . page 17-83
Replacement Parts . . . . . page 17-86

For additional information, reference Catalog #9001CT0301.

© 2003 Schneider Electric
All Rights Reserved
9/8/03

Non-Illuminated and Illuminated 4 Position Selector Switch Operators – UL Types 4, 4X, 13/NEMA Types 4, 4X, 13

Legend Plate and Contact Block Not Included Unless Noted. For use in hazardous locations – See page 150.

CONTACT BLOCK REQUIRED			1 — Contact Closed 0 — Contact Open
Contact Block Position	**Quantity and Type**	**Mount on Side**	
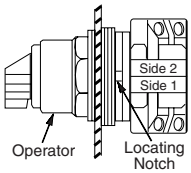 Top View	KA1 OR KA3 / KA2	KA1 #2 OR KA3 #2	1 0 0 0
		KA2 #2	0 0 1 0
	KA1 OR KA3 / KA2	KA1 #1 OR KA3 #1	0 0 0 1
		KA2 #1	0 1 0 0

Non-Illuminated Operators	Cam	Type
Manual Return		
Operator Only ①		
Without Knob	H	SKS88
With Standard Black Knob	H	SKS88B
With Other Color Knob (See Table) ②	H	SKS88②
Spring Return From Left Spring Return From Right Maintained in the Two Mid Positions		
Operator Only ①		
Without Knob	H	SKS89
With Standard Black Knob	H	SKS89B
With Other Color Knob (See Table) ②	H	SKS89②
Illuminated Operators		
Manual Return ①	H	SK88J1
Without Knob 110-120 V, 50-60 Hz	H	SK88J1R
With Standard Red Knob 110-120 V, 50-60 Hz	H	SK88J③
Without Knob and With Other Voltage Transformer, Flashing or LED ④	H	SK88J③
Without Knob Full Voltage, Neon or Resistor ⑤	H	SK88J③②
With Other Color Knob and Other Voltage Transformer, Flashing or LED ④	H	SK88J③②
With Other Color Knob Full Voltage, Neon or Resistor ⑤		
Spring Return From Left Spring Return From Right Maintained in the Two Mid Positions	H	SK89J1
Operator Only ①	H	SK89J1R
Without Knob 110-120 V, 50-60 Hz	H	SK89J③
With Standard Red Knob 110-120 V, 50-60 Hz	H	SK89J③
Without Knob and Other Voltage Transformer, Flashing or LED ④	H	SK89J③②
Without Knob Full Voltage, Neon or Resistor ⑤	H	SK89J③②
With Other Color Knob and Other Voltage Transformer, Flashing or LED ④		
With Other Color Knob Full Voltage, Neon or Resistor ⑤		

① These operators can be ordered complete with contact blocks, for maximum block usage – see page 155. Add the "H" number chosen from page 151 to the end of the operator type number.
EXAMPLE: SKS88FB + H13(KA1-SIDE 2) = SKS88FBH13.
② Add the color code as chosen from knob color table at right.
EXAMPLE: SKS88② with a green gloved hand knob = SKS88FG.
③ Add the voltage assembly code as chosen from Voltage Assembly Code Table on page 145.
EXAMPLE: SK88J③ with a 60 Vac-Vdc voltage = SK88J37.
④ The color of the knob must be the same color as the LED voltage chosen (i.e., red LED use red knob) or use a clear knob.
⑤ On neon voltages, use clear knobs only.

Voltage Assembly Codes
See Page 145

Potentiometer♦ (with Dial Plate ⑥)

Watts	Description	Type
2	Operator only – Single Pot	~~SK-20~~
	Operator with Single Pot	SK-21 ⑦
	Operator only – Tandem Pot	~~SK-22~~
	Operator with Tandem Pot	SK-23 ⑧

⑦ ⑧ Complete Type No. by adding suffix No. from table below.
Example: Type SK2105 or SK2385

Suffix ⑦	Ohms	Suffix ⑦	Ohms	Suffix ⑦	Ohms	Suffix ⑧	Ohms Front	Ohms Rear
01	50 K	~~07~~	~~5000~~					
02	100 K	08	10 K					
38	200 K	~~40~~	~~15 K~~	13	500 K	82	1000	1000
03	250 K	09	25 K	37	750 K	83	5000	5000
04	500 K	35	35 K	14	1.0 Meg	85	10 K	10 K
05	1000 K	10	50 K	15	2.5 Meg	88	50 K	50 K
32	1500 K	36	75 K	16	5.0 Meg	89	100 K	100 K
39	2000 K	11	100 K	17⑨	5.0 Meg			
06	2500 K	12	250 K					
33	3500 K							

⑥ The dial plate only 65158-001-80-03.
⑨ For use with 9050 Type T.
♦ Potentiometer shaft diameter = 1/4" (6 mm), length = 7/8" (22 mm).
Not UL Listed, CSA Certified, or CE Marked.

Selector Switch Knobs

Color	Standard Knob		Gloved Hand Knob		Coin Operated	
	② Knob Code	Type	② Knob Code	Type	② Knob Code	Type
Black	B	B11 ✻	FB	B25 ✻	TB	B18 ✻
Red	R	R8	FR	R24	TR	R16
Green	G	G8	FG	G24	TG	G16
Yellow	Y	Y8	FY	Y24	TY	Y16
Orange	S	S11 ✻	FS	S25 ✻	–	–
Blue	L	L8	FL	L24	TL	L16
White	W	W8	FW	W24	–	–
Amber	A	A8	FA	A24	–	–
Clear	C	C8	FC	C24	TC	C16

✻ Black and orange are opaque and for use on non-illuminated operators only.

Basic Operators . . . . . Page 155
Boots . . . . . Page 154
Contact Blocks . . . . . Pages 149-150
"H" Numbers . . . . . Page 151
Lamps . . . . . Page 148
Legend Plates . . . . . Pages 152-153
Light Modules . . . . . Page 148
Lockouts . . . . . Page 154
Outline Dimensions . . . . . Pages 159-160
Ratings . . . . . Pages 149-150
Replacement Parts . . . . . Page 158
Ring Nuts . . . . . Page 158
Cams . . . . . Page 157

© 1999-2005 Schneider Electric All Rights Reserved

RXZ E2M114M with relay RXM4AB2P7TQ

Miniature relays with lockable test button, without LED (sold in lots of 100)

Coil Voltage	Number and type of contacts - Thermal current (Ith)					
	DPDT - 12 A			4PDT - 6 A		
	Catalog Number	Weight		Catalog Number	Weight	
		lb.	kg		lb.	kg
12 Vdc	—	—	—	**RXM4AB1JDTQ**	0.080	0.036
24 Vdc	**RXM2AB1BDTQ**	0.082	0.037	**RXM4AB1BDTQ**	0.080	0.036
48 Vdc	—	—	—	**RXM4AB1EDTQ**	0.080	0.036
110 Vdc	—	—	—	**RXM4AB1FDTQ**	0.080	0.036
220 Vdc	—	—	—	**RXM4AB1MDTQ**	0.080	0.036
24 Vac	**RXM2AB1B7TQ**	0.082	0.037	**RXM4AB1B7TQ**	0.080	0.036
48 Vac	—	—	—	**RXM4AB1E7TQ**	0.080	0.036
120 Vac	**RXM2AB1F7TQ**	0.082	0.037	**RXM4AB1F7TQ**	0.080	0.036
230 Vac	**RXM2AB1P7TQ**	0.082	0.037	**RXM4AB1P7TQ**	0.080	0.036
Miniature relays with LED (sold in lots of 100)						
24 Vdc	—	—	—	**RXM4AB2BDTQ**	0.080	0.036
24 Vac	**RXM2AB2B7TQ**	0.082	0.037	**RXM4AB2B7TQ**	0.080	0.036
230 Vac	**RXM2AB2P7TQ**	0.082	0.037	**RXM4AB2P7TQ**	0.080	0.036

RXZ E2S114M with relay RXM4AB2F7TQ

Sockets (sold in lots of 10)

Contact terminal arrangement	Connection	Relay type	Catalog Number	Weight	
				lb.	kg
Mixed	Screw clamp terminals	RXM2●●●● [1] RXM4●●●●	**RXZE2M114** [2]	0.11	0.048
	Box lug connector	RXM2●●●● [1] RXM4●●●●	**RXZE2M114M** [2]	0.12	0.056
Separate	Box lug connector	RXM2●●●●	**RXZE2S108M** [3]	0.13	0.058
		RXM3●●●●	**RXZE2S111M** [2]	0.15	0.066
		RXM4●●●●	**RXZE2S114M** [2]	0.15	0.070

[1] When mounting relay RXM2●●●●● on socket RXZE2M●●●●, the thermal current must not exceed 10 A.
[2] Thermal current Ith: 10 A
[3] Thermal current Ith: 12 A

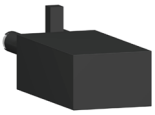
RXM 041●●7

Protection modules (sold in lots of 20)

Description	Voltage	For use with	Catalog Number	Weight	
				oz.	g
Diode	6–250 Vdc	All sockets	**RXM040W**	0.11	3.0
RC circuit	24–60 Vac	All sockets	**RXM041BN7**	0.35	10.0
	110–240 Vac	All sockets	**RXM041FU7**	0.35	10.0
Varistor	6–24 Vac/Vdc	All sockets	**RXM021RB**	1.06	30.0
	24–60 Vac/Vdc	All sockets	**RXM021BN**	1.06	30.0
	110–240 Vac/Vdc	All sockets	**RXM021FP**	1.06	30.0

REXL4●●

Timing relays

Description	For use with	Catalog Number	Weight	
			lb.	kg
2 timed DPDT contacts (function A—On-delay)	Sockets RXZ E●●●●●	**REXL2●●** [4]	0.09	0.042
4 timed 4PDT contacts (function A—On-delay)		**REXL4●●** [4]	0.09	0.042

[4] Please refer to the *Zelio® Time - Timers* catalog (9050CT0001R2/05).

RXZ400

Accessories (sold in lots of 10)

Description	For use with	Catalog Number	Weight	
			oz.	g
Metal hold-down clip	All sockets	**RXZ400**	0.04	1.0
Plastic hold-down clip	All sockets	**RXZR335**	0.18	5.0
Bus jumper, 2-pole (Ith: 5 A)	All sockets with separate contacts	**RXZS2**	0.18	5.0
Mounting adapter for DIN rail [5]	All relays	**RXZE2DA**	0.14	4.0
Mounting adapter for mounting directly to a panel	All relays	**RXZE2FA**	0.07	2.0
Clip-in markers	All relays (sheet of 108 markers)	**RXZL520**	2.82	80.0
	All sockets except RXZE2M114	**RXZL420**	0.04	1.0

[5] Test button becomes inaccessible.

© 2005–2008 Schneider Electric All Rights Reserved

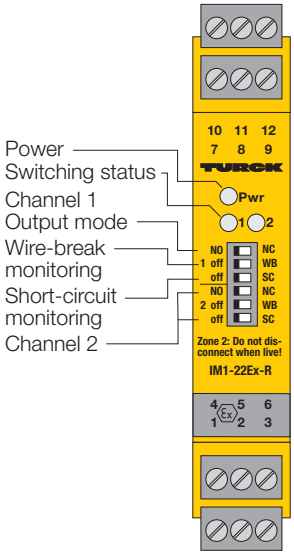

Isolating Switching Amplifier IM1-22Ex-R 2-channel

- **2-channel isolating switching amplifier with removable terminal blocks**
- **Intrinsically safe input circuits EEx ia**
- **Area of application according to ATEX: II (1) GD, II 3 G**
- **Approved for installation in zone 2, however the device must be installed in a housing which complies with the requirements of EN 60079-15 with a minimum protection degree of IP54**
- **Functional safety up to SIL 2 (acc. to EN 61508)**
- **Galvanic isolation between input circuits, output circuits and supply voltage**
- **Input circuit monitoring for wire-break and short-circuit (can be disabled)**
- **2 relay outputs, each with one NO contact**
- **Selectable NO/NC output function**
- **Universal supply voltage (20...250 VAC/20...125 VDC)**

The isolating switching amplifier type IM1-22Ex-R is a dual channel device featuring intrinsically safe input circuits. It can be connected to sensors according to EN 60947-5-6 (NAMUR), variable resistors or potential-free contacts.

The output circuits feature one relay with one NO contact each.

Six front panel programming switches select the output function of each channel (normally open mode = NO/or normally closed mode = NC) and enable separate activation and de-activation of wire-break (WB) and short-circuit (SC) monitoring of each channel.

When using mechanical contacts as the input device, wire-break and short-circuit monitoring must be disabled or shunt resistors must be connected to the contacts (II). (See next page for contact configuration).

The green LED on the front cover indicates that the device is powered. The two dual colour LEDs indicate the switching status (yellow) as well as fault conditions (red). When the input circuit monitoring feature is activated, red illuminates to indicate a fault in the input circuit and the respective output relay is de-energised.

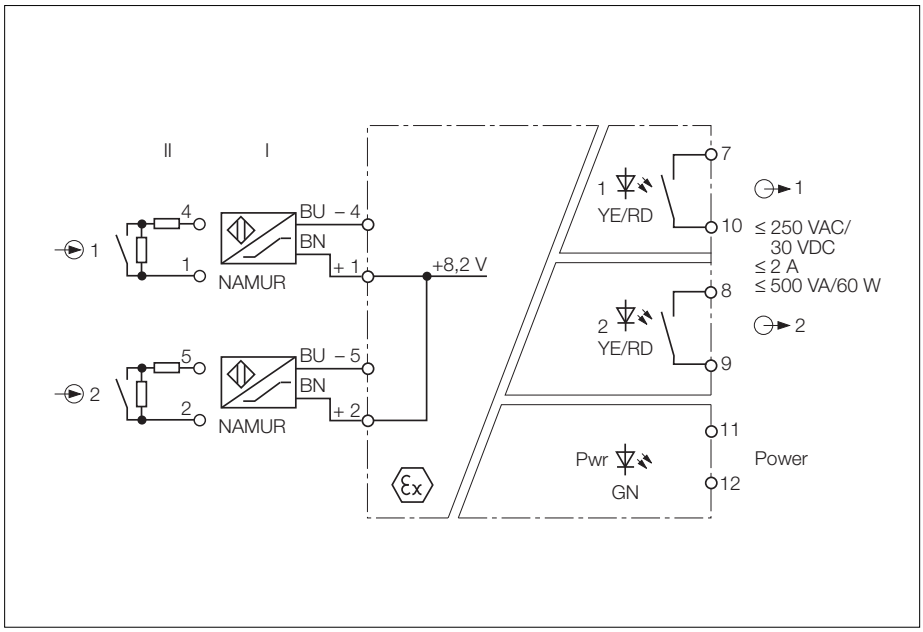

Isolating switching amplifier IM1-22Ex-R

Type	IM1-22Ex-R
Ident-no.	7541231
Supply voltage U_B	20...250 VAC/20...125 VDC
Line frequency (AC)	40...70 Hz
Power/current consumption	≤ 3 W
Galvanic isolation	between input circuit, output circuits and supply voltage for 250 V_{rms} test voltage 2.5 kV_{rms}
Input circuits	according to EN 60947-5-6 (NAMUR), intrinsically safe according to EN 50020
Operating characteristics	
– Voltage	8,2 V
– Current	8,2 mA
Switching threshold	1.55 mA
Hysteresis	typ. 0.2 mA
Wire-break threshold	≤ 0.1 mA
Short-circuit threshold	≥ 6 mA
Contact configuration Of mechanical switches with active input circuit monitoring function	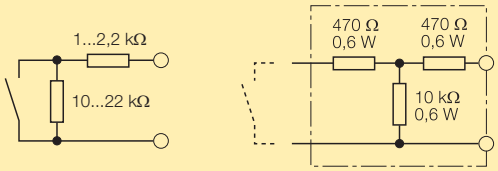 resistor module WM1, ident-no. 0912101
Output circuits	2 relay outputs with 1 NO contact each
Switching voltage	≤ 250 VAC/120 VDC
Switching current per output	≤ 2 A
Switching capacity per output	≤ 500 VA/60 W
Switching frequency	≤ 10 Hz
Contact material	silver-alloy + 3 µm Au
Ex-Approval acc. to certificate of conformity	TÜV 04 ATEX 2553 / TÜV 06 ATEX 552968 X
Maximum nominal values	
– No load voltage U_0	≤ 9.6 V
– Short-circuit current I_0	≤ 11 mA
– Power P_0	≤ 26 mW
Maximum external inductances/capacitances	
– [EEx ia] IIC	1 mH/1.1 µF / 5 mH/0.83 µF / 10 mH/0.74 µF
– [EEx ia] IIB	2 mH/5,2 µF / 10 mH/3,8 µF / 20 mH/3,4 µF
– Ex nL IIC	1 mH/1,9 µF / 5 mH/1,4 µF / 10 mH/1,2 µF
– Ex nL IIB	1 mH/11 µF / 5 mH/7,5 µF / 10 mH/6,6 µF
Marking of devices	⟨Ex⟩ II (1) GD [EEx ia] IIC II 3 G Ex nA nC [nL] IIC/IIB T4
LED indications	
– Power	green
– Switching status/Fault indication	2 x yellow/red (dual colour LED)
Terminal housing	12-pole, 18 mm wide, Polycarbonate/ABS, flammability class V-0 per UL 94
Mounting	snap-on clamps for top-hat rail (DIN 50022) or screw terminals for panel mounting
Connection	removeable terminal blocks, reverse-polarity protected, screw connection, self-lifting
Connection profile	≤ 1 x 2.5 mm^2, 2 x 1.5 mm^2 or 2 x 1.0 mm^2 with wire sleeves
Degree of protection (IEC 60529/EN 60529)	IP20
Operating temperature	-25…+70 °C

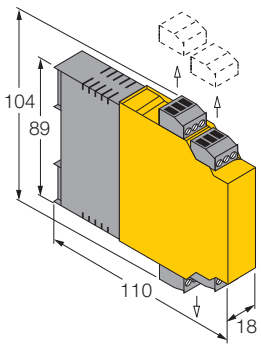

Hans Turck GmbH & Co.KG • D–45466 Mülheim/Ruhr • Tel. 0208/4952-0 • Fax 0208/4952-264 • E-Mail: more@turck.com • www.turck.com

Barriers and Isolators

Intrinsically Safe Zener Diode Barriers

Intrinsically Safe Galvanic Isolators

Description

For applications involving sensor use in hazardous locations, Rockwell Automation offers a line of Intrinsic Safety Zener Diode Barriers and Galvanic Isolators. Both are economical solutions for instrumentation and control systems in hazardous locations as defined by NEC article 500 and CEC Part I, Section 18.

Zener diode barriers are *passive* protective interface assemblies that limit the amount of energy (voltage and current) that enters a hazardous area in the event of a fault (i.e., overvoltage, shorted field wiring). The energy is limited to an amount that would not be sufficient to ignite the potentially explosive atmosphere. Designed in a slim 1/2 inch wide housing, each barrier contains zener diodes that limit the voltage while a resistor prevents excessive current from being transferred to the hazardous area. In the barriers offered by Rockwell Automation, a replaceable fuse is used to protect the barrier from miswiring and transients.

The principle of a keyed fuse assembly has been employed. In case of a fault due to overvoltage, polarity misconnection or transients, only the protective keyed fuse assembly needs to be replaced.

The replacement of the fuse assembly can be done by the user at the job site. The barriers do not have to be returned to the manufacturer for replacement.

Intrinsically Safe or Galvanic Isolators are *active* protective interface assemblies that limit the amount of energy allowed to enter a hazardous area under fault conditions. Sometimes called Transformer Isolated Barriers, they separate intrinsically safe wiring from non-intrinsically safe wiring through the use of the same isolation coils found in power transformers. Galvanic isolators, unlike zener diode barriers, do not require grounding—therefore they may reduce ground loop problems as well as installation and maintenance costs. The slim 3/4 inch wide housing on DC models also conserves valuable mounting space. DIP switches provide convenient programming of output and diagnostic functions while multiple LEDs provide visual indication of module and circuit status.

Rockwell Automation zener diode barriers and galvanic isolators are DIN Rail mountable and designed primarily for use with intrinsically safe proximity sensors and photoelectrics. All Rockwell Automation barriers and isolators are UL Listed, FM Certified, CSA and CE Marked for all applicable directives.

Intrinsically Safe Zener Diode Barriers

Features

- Replaceable fuse
- Low internal resistance
- Short-circuit protected
- Reverse polarity protection
- Slim 1/2 inch wide housing
- UL Listed, FM, CSA and PTB Certified, and CE Marked for all applicable Directives

Specifications

Environmental	
Certifications	UL, FM, CSA PTB, and CE Marked for all applicable directives
Operating Temperature [C (F)]	+20…+60° (-4…+140°)
Vibration	55 Hz (1.5 mm amplitude)
Shock	20 g
Relative Humidity	0…95% (noncondensation)
Electrical	
Leakage Current	≤1 µA
Protection Type	Reverse polarity (protected by replaceable fuse), over-voltage (protected by replaceable fuse), and short-circuit (incorporated)
Replaceable Fuse Rating	160 A
Operating Frequency	≤100 kHz @ Isc > 50 mA; ≤50 kHz @ Isc ≤0.50 mA
Short Circuit Protection	Incorporated
Mechanical	
Material	Polyamide
Mounting Location	Nonhazardous or Class 1, Division 2 or Zone 2/Zone 22 locations
I.S. Connections for	Class I, II, III; Div 1 and 2; Groups A-G and Zones 0, 1, 2, 20, 21, 22; Group IIC and IIB
Enclosure Rating	IP40 (IEC529)

Compatible Sensors

Photoelectrics

Sensor Style	Sensing Mode	Connection Type	Cat. No. Sensor	Cat. No. Barriers Used†
9000 Through Beam Photoelectric	Emitter	2 m Cable	42GRL-9540	897H-S120
		4-Pin Micro	42GRL-9540-QD	
		4-Pin Mini	42GRL-9540-QD1	
	Receiver	2 m Cable	42GRR-9500	897H-S214 or 897H-S150
		4-Pin Micro	42GRR-9500-QD	
		4-Pin Mini	42GRR-9500-QD1	
5000 Photoelectric	Retroreflective	Screw Terminals	42DRU-5500	897H-S120 or 897H-S140 or 897H-S150
	Polarized Retroreflective		42DRU-5700	
	Standard Diffuse		42DRP-5500	
	Fiber Optic		42DRA-5500	

Approximate Dimensions [mm (in.)]

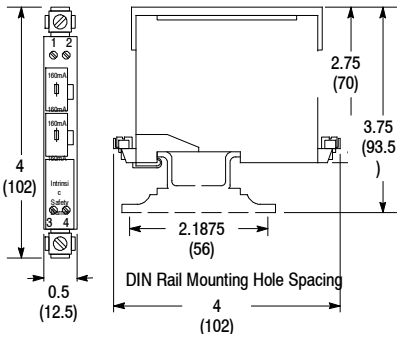

Proximities

Sensor Style	Barrel Diameter	Shielding	Cat. No. Sensor	Cat. No. Barriers Used†
Stainless Steel Face and Barrel Proximity Sensor	12 mm	Shielded	871TM-DR2ENE12-⊗	897H-S214 or 897H-S120
		Unshielded	871TM-DR4ENE12-⊗	
	18 mm	Shielded	871TM-DR2ENE18-⊗	
		Unshielded	871TM-DR4ENE18-⊗	
	30 mm	Shielded	871TM-DR2ENE30-⊗	
		Unshielded	871TM-DR4ENE30-⊗	

⊗ Replace symbol with desired termination. A2 for 2 meter PVC cable and D4 for 4-pin micro QD.

Intrinsically Safe Zener Diode Barriers

Product Selection

Rated Voltage	Internal Resistance	Classification	FM Entity Parameters: Supply Voltage, Max.	FM Entity Parameters: Current, Max.	FM Entity Parameters: Power, Max.	FM Entity Parameters: Permissible External Capacity	FM Entity Parameters: Permissible External Inductance, Max.	ATEX Certified Stahl Part No.	Cat. No.
24V DC	286…319 ohms	A, B, E	28V	100 mA	700 Mw	0.083 µF	1.6 mH	9001/01-280-100-101	**897H-S120**
		D, F, G				0.65 µF	11 mH		
	0 ohms	A, B, E				0.083 µF	1.6 mH	9001/03-280-000-101	**897H-S140**
		D, F, G				0.65 µF	230 mH		
	599…666 ohms	A, B, E				0.083 µF	1.6 mH	9001/01-280-050-101	**897H-S150**
		D, F, G				0.65 µF	230 mH		
	269…290 ohms	A, B,E				0.083 µF	1.6 mH	9002/13-280-110-001	**897H-S214**
		D, F, G				0.65 µF	230 mH		
	321…356 ohms	A, B				0.083 µF	1.6 mH	9002/11-280-186-001	**897H-S233**
		D, F, G				0.65 µF	230 mH		
Replacement Fuse Assembly									**897H-F160**

Note: Safety Parameters stated above are per input.

Typical Wiring Diagram

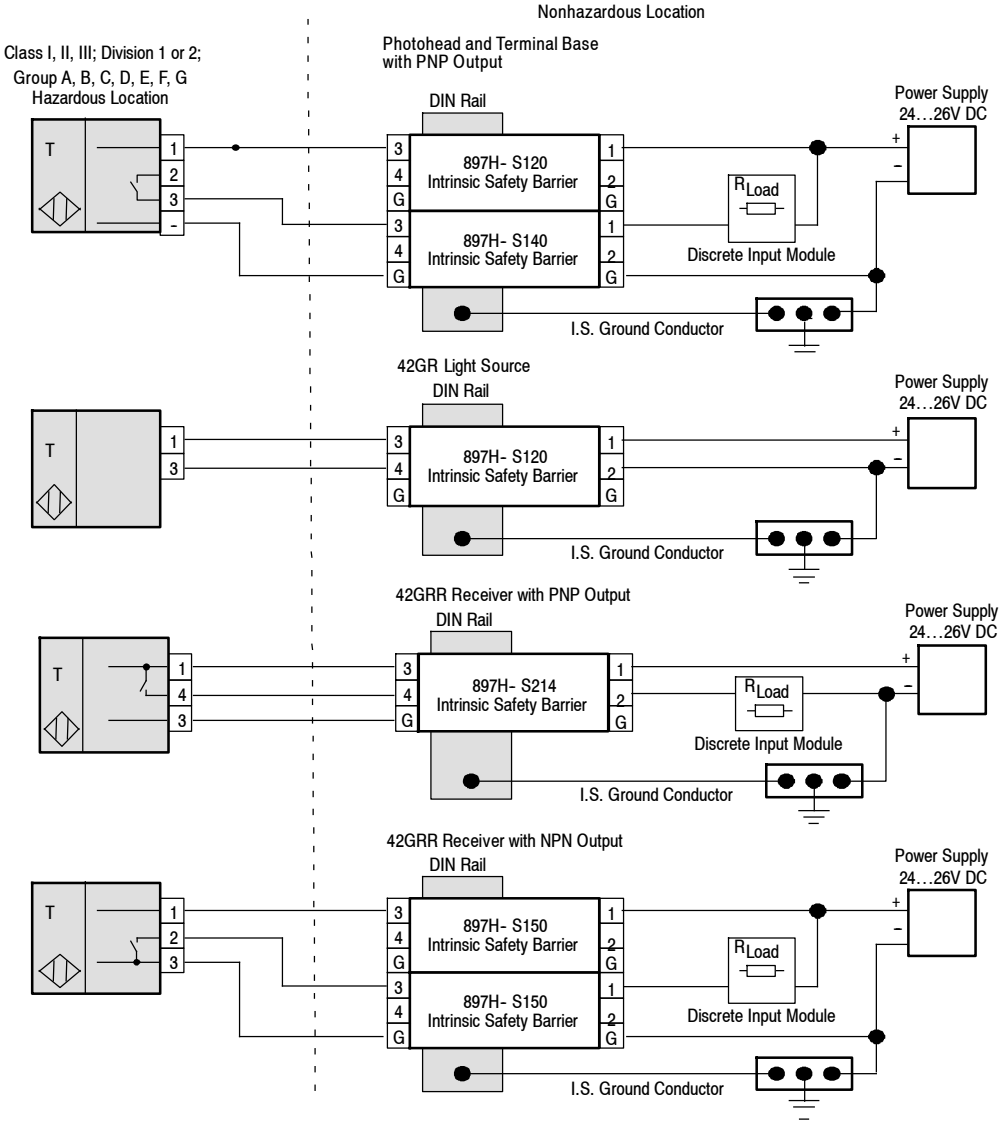

PHASE MONITOR RELAYS

Phase Loss, Phase Reversal, Phase Unbalance, and Under/Over Voltage
PMP Series Plug-in

- Universal voltage range of 208-480V on PMPU provides the flexibility to cover a variety of applications with one unit
- Protects against phase loss, phase reversal, phase unbalance, undervoltage and overvoltage
- Variety of user-selectable and adjustable settings for the ultimate in three-phase protection
- Automatic & Manual Reset in Same Unit
- Multi-Color LED indicates normal condition and provides specific fault indication to simplify troubleshooting
- Compact plug-in case utilizing industry-standard 8 pin octal socket
- 10A SPDT output contacts
- c UL us CE UL LISTED

(with appropriate socket)

The PMP Series Phase Monitor Relays utilize a microprocessor-based design to provide protection against phase loss, phase reversal, phase unbalance, undervoltage and overvoltage. The PMPU is a universal voltage product that works on any three-phase system voltage from 208-480V (a separate 120V version is available). These devices are designed to be compatible with most Wye or Delta systems with no connection to Neutral required. PMP Series products protect against unbalanced voltages or single phasing regardless of any regenerative voltages.

The relay is energized when the phase sequence and all voltages are correct. Any one of five fault conditions will de-energize the relay. As standard, re-energization is automatic upon correction of the fault condition. Manual reset is available if a momentary N.C. switch is wired to the appropriate terminals. A multi-color LED indicates normal condition and also provides specific fault indication to simplify troubleshooting.

The PMP Series offers a variety of user-adjustable settings. The percent phase unbalance is adjustable from 2-10%, and also has a “Disable” setting for those applications where poor voltage conditions could cause nuisance tripping. The undervoltage drop-out can be set at 80-95% of operating voltage (overvoltage setting is fixed at 110% of nominal). The adjustable time delay drop-out on undervoltage (0.1-20 seconds) eliminates nuisance tripping caused by momentary voltage fluctuations. There is also an adjustable time delay (1-300 seconds) on both power up and restart after a fault has been cleared.

PROTECTS AGAINST	NOMINAL VOLTAGE▲ 50/60 Hz	PRODUCT NUMBER	WIRING/SOCKET ■
Phase Loss, Phase Reversal, Phase Unbalance, Undervoltage & Overvoltage	120V	PMP120	8 Pin Octal **70169-D**
	208-480V	PMPU *	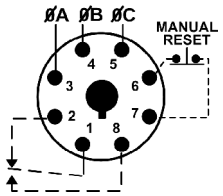 **DIAGRAM 104**

▲ Phase-to-Phase (Line-to-Line).
* Requires a 600V-rated socket when used on system voltages above 300V.
■ See Pages 80 & 81 for **Sockets & Accessories**.

MACROMATIC

800-238-7474
www.macromatic.com
sales@macromatic.com

PHASE MONITOR RELAYS

Phase Loss, Phase Reversal, Phase Unbalance, and Under/Over Voltage

PMP Series Plug-in

Application Data & Dimensions

Application Data

Phase Loss:
Unit trips on loss of any Phase A, B or C.

Phase Reversal:
Unit trips if rotation (sequence) of the three phases is anything other than A-B-C.

Undervoltage:
Adjustable from 80-95% of nominal voltage. Unit trips when the average of all three lines is less than the adjusted set point for a period longer than the adjustable time delay drop-out.

Overvoltage:
Fixed at 110% of nominal voltage. Unit trips when the average of all three lines is greater than the fixed set point for a period longer than the time delay drop-out.

Phase Unbalance:
Adjustable from 2 - 10% unbalance. Unit trips when any one of the three lines deviates from the average of all three lines by more than the adjusted set point. There is also a "Disable" setting adjustment that will turn off the Phase Unbalance Protection if nuisance tripping is a problem.

Output Contacts:
SPDT: 10A @ 240V AC/30V DC, 1/2HP @ 240V AC

Life:
Mechanical: 10,000,000 operations
Full Load: 100,000 operations

Response Times:

Power Up & Restart After Fault:	1 - 300 seconds adjustable
Drop-out Due to Fault:	
Phase Loss & Reversal	100ms fixed
Phase Unbalance	2 seconds fixed
Undervoltage	0.1 - 20 seconds adjustable
Overvoltage	Fixed Time Based on Inverse Time Curve

Hysteresis: 2 - 3%

Load (Burden): Less than 3VA

Temperature: -28° to 65°C (-18° to 149°F)

Mounting:
Uses an 8 pin octal socket. Requires a 600V-rated socket when used on system voltages greater than 300V (Macromatic Product Number 70169-D--see Page 80).

Indicator LED:

LED Status	Indicator
Green Steady	Normal / Relay ON
Green Flashing	Power Up / Restart Delay
Red Steady	Unbalance
Red Flashing	Undervoltage / Overvoltage
Amber Steady	Reversal
Amber Flashing	Loss
Green / Red Alternating	Undervoltage / Overvoltage Trip Pending
Red / Amber Alternating*	Nominal Voltage Set Error

* Applies to 208-480V units only.

Reset:
As standard, reset is automatic upon correction of fault. When a momentary-contact N.C. switch is wired across the Manual Reset terminals (6 & 7), the unit switches to manual reset mode and remote manual reset is available.

Approvals:
c UL us
File #E109466

CE
Low Voltage & EMC Directives
EN60947-1, EN60947-5-1

UL LISTED IND. CONT. EQUIP. 5U07
with appropriate socket
File #E109466

Dimensions

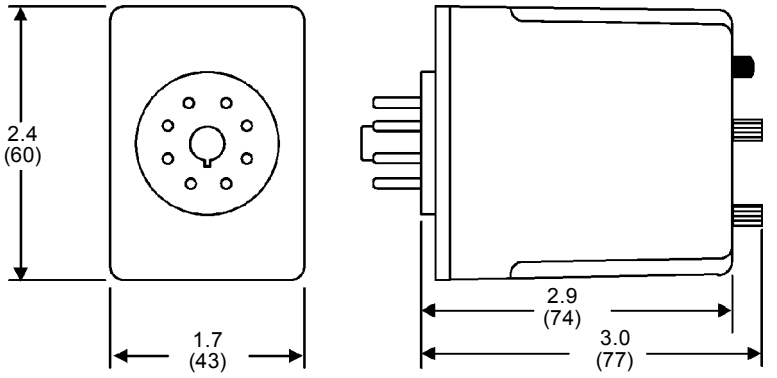

All Dimensions in Inches (Millimeters)

SDSA3650 SPDs

Square D Type 1 Surge Protective Devices

Square D™ brand Surgelogic™ SDSA3650 products are compact and affordable Surge Protective Devices (SPDs). SDSA3650 SPDs offer a simple means to bring down initial surges to manageable levels and can offer addtional value in a cascaded SPD system. Their compact design allows surge suppression to be installed adjacent to power panels or directly on sensitive equipment.

SQUARE D™

by Schneider Electric

SDSA3650 SPDs
Features

Superior Performance

Square D brand Surgelogic SDSA3650 SPDs utilize high-energy suppression circuitry that can be located at any point in the electrical system. As a Type 1 rated device, they have the flexibility to be used with or without an Overcurrent Protection Device (OCPD).

SDSA3650 SPDs provide surge suppression for equipment from severe transient activity. Each metal oxide varistor (MOV) is individually fused and the products carry a NEMA Type 4X rating suitable for installing indoors, outdoors, or in other harsh environments.

Easy Installation

Surgelogic SDSA3650 SPDs are some of the most versatile, yet compact devices available on the market today. This compact package can be mounted on an electrical panel, meter socket, or inside electrical control cabinets.

Warranty

The SDSA3650 and SDSA3650D warranty is 2 years.

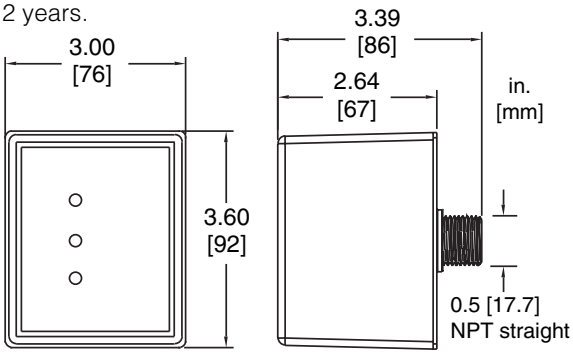

SDSA3650 SPDs

Performance

Surge Current Rating per Phase	40kA
Short Circuit Current Rating	200kA
Modes of Protection	6
Fusing	Individually fused MOVs
Thermal Fusing	Yes
Overcurrent Fusing	Yes
Operating Frequency	50/60 Hz

Mechanical Description

Enclosure	Plastic
NEMA Rating	NEMA Type 4X
Connection Method	#12 AWG
Weight	1.8 lbs
Mounting Method	Close Nippled, Back Mounted
Operating Altitude	Sea Level-12,000' (3,658 m)
Storage Temperature	-40˚ F to +149˚ F (-40˚ C to +65˚ C)
Operating Temperature	-40˚ F to +149˚ F (-40˚ C to +65˚ C)

Diagnostics

Green status LED

Listings and Performance

cULus Listed per UL 1449 3rd edition Type 1 SPD, UL 1283, CSA C22.2 No. 8-M1986, C233.1-87
CE marked (IEC 61643-11)

The SDSA3650 is a four-wire surge suppressor designed for use on all solidly grounded systems up to 600Y/347 Vac. The SDSA3650D is a three-wire surge suppressor designed for delta applications up to 600 Vac.

Voltage	Surge Current per Phase	Modes of Protection	Configuration	Model Number	MCOV	SCCR	I_n	VPR L-N	VPR L-G	VPR L-L	VPR N-G
600Y/347V[1]	40kA	6	3 Ø, 4-wire	SDSA3650	750V L-N 1500V L-L	200kA	10kA	2500V	N/A	4000V	N/A
600V Delta[2]	40kA	3	3 Ø, 3-wire	SDSA3650D	1500V L-L	200kA	10kA	N/A	N/A	4000V	N/A

1 Applicable voltages: 120/240V, 208Y/120V, 380Y/220V, 400Y/230V, 480Y/277V, 600Y/347V
2 Applicable voltages: 240V Delta, 480V Delta, 600V Delta

Square D and SurgeLogic are trademarks or registered trademarks of Schneider Electric and/or its affiliates in the United States and/or other countries. Other marks used herein may be the property of their respective owners.

Schneider Electric USA, Inc. 1751 S. 4800 W., Salt Lake City, UT 84104, USA Telephone: (801)-977-9009 Fax: (801)-977-0200 www.surgelogic.com

Document Number 9990-0120B March 2011 bw

© 2011 Schneider Electric. All rights reserved.

Series Model	RTE	GT3A	GT3D	GT3F
Appearance				
Mode of Operation	ON-delay Interval OFF-delay One-shot Cycle Signal OFF delay Signal ON/OFF delay	ON-delay Interval OFF-delay One-shot Cycle (off first) Cycle (on first) Signal OFF delay Signal ON/OFF delay	ON-delay Interval One-shot One-shot ON delay Cycle Signal OFF delay Signal ON/OFF delay	True OFF-delay
Time Range	0.1 second to 600 hrs	0.05 second to 180 hrs	0.01 second to 99.9 hrs	0.05 to 600 seconds
Contact Configuration	DPDT	SPDT, DPDT	SPDT, DPDT	SPDT, DPDT
Repeat Accuracy	±0.25% maximum	±0.2% maximum	±0.3% maximum	±0.4% maximum
Contact Load Rating (resistive)	10A, 240V AC	SPDT: 3A, 250V AC DPDT: 5A, 240V AC	SPDT: 3A, 250V AC DPDT: 5A, 240V AC	5A, 250V AC
Available Operating Voltage	120-240V AC 12V DC 24V AC/DC	100 to 240V AC 12V DC 24V AC/DC	100 to 240V AC 12V DC 24V AC/DC	100 to 240V AC 24V AC/DC
Approvals	UL Listed TUV CSA CE	UL recognized TUV CSA CE	UL recognized TUV CSA CE	UL recognized TUV CSA CE

Series Model	GT3S	GT3W	GE1A	GT5P	GT5Y
Appearance					
Mode of Operation	Star-Delta	Sequential start ON-delay Recycler & instantaneous Recycler OFF start Recycler ON start Interval Interval ON delay Sequential interval	ON-delay	ON-delay	ON-delay
Time Range	Star side: 0.05s to 100s Star-delta Switching Time: 0.05, 0.1, 0.25, 0.5 seconds	0.1s to 6 hrs	0.1s to 10 hrs	0.1s to 10 minutes	0.1s to 1 hour
Contact Configuration	SPST-NO	DPDT	SPDT, DPDT	SPDT	DPDT, 4PDT
Repeat Accuracy	±0.2% maximum	±0.2% maximum	±0.2% maximum	±0.2% maximum	±0.2% maximum
Contact Load Rating (resistive)	5A, 250V AC/30VDC	3A, 250V AC 5A, 120V AC/30V DC	5A, 240V AC	5A, 250V AC	5A, DPDT: 250V AC 3A, 4PDT: 250V AC
Available Operating Voltage	100 to 240V AC	100 to 240V AC 12V DC 24V AC/DC	24V AC/DC 110 to 120V AC 220 to 240V AC	100 to 120V AC 200 to 240V AC 12V DC 24V DC	100 to 120V AC 200 to 240V AC 12V DC 24V DC 24V AC
Approvals	UL recognized TUV CSA CE	UL Listed cUL TUV CE	UL Listed cUL TUV Rheinland CE	UL recognized TUV CSA CE	UL recognized TUV CSA CE

Description

These 7 figure, AC or DC hour meters with running indicators, offer crisp, distinctive styling for many panel applications. Available in square and round bezel, flush mount, or three-hole round panel mount. Each is light-weight, low power, and carry UL, CSA and CE approvals.

Features

- 7 Figure, 99999.99
- Various voltage inputs
- Distinctive styling

Options

- Terminations
- Din Rail
- Voltages

Specifications

Figures: 7 figures, 0.14" high [3.6mm], 99,999.99 hours
Reset: Non-reset
Voltages: 24, 115, or 230VAC (+/-10%), 50 or 60Hz., 10-80 VDC
Power: 3 watts (AC), 1.2 watt maximum (DC)
Terminations: 1/4" [6.3mm] spade terminals, with removable screws, or 8" [203mm] wire leads

Mounting: Panel (mounting hardware included)
Temp. Range: -22°F to +158°F [-30°C to +70°C]
Approvals: UL Recognized and CSA Certified (AC only), CE Approved
Weight: 2 oz. [57g]

Models	Description
711-0150	115VAC/60Hz., 2.28" Dia., Flush mount, screw termination
711-0152	230VAC/60Hz., 2.28" Dia., Flush mount, screw termination
711-0160	115VAC/60Hz., 2.93" Dia., 3-hole round, screw termination
711-0161	115VAC/50Hz., 2.93" Dia., 3-hole round, screw termination
711-0162	230VAC/60Hz., 2.93" Dia., 3-hole round, screw termination
711-0163	230VAC/50Hz., 2.93" Dia., 3-hole round, screw termination
711-0164	24VAC/60Hz., 2.93" Dia., 3-hole round, screw termination
711-0170	230VAC/60Hz., 2.93" Dia., 3-hole round, 8" wire leads
711-0171	115VAC/60Hz., 2.93" Dia., 3-hole round, 8" wire leads
711-0180	115VAC/60Hz., 1.89" Sq., Flush mount, screw termination

Models	Description
711-0182	24VAC/60Hz., 1.89" Sq., Flush mount, screw termination
711-0190	115VAC/60Hz., 2.05" Sq., Flush mount, screw termination
711-0191	230VAC/60Hz., 2.05" Sq., Flush mount, screw termination
711-0192	24VAC/60Hz., 2.05" Sq., Flush mount, screw termination
711-0193	115VAC/50Hz., 2.05" Sq., Flush mount, screw termination
711-0194	230VAC/50Hz., 2.05" Sq., Flush mount, screw termination
711-0195	24VAC/50Hz., 2.05" Sq., Flush mount, screw termination
711-0200	115VAC/60Hz., 2.20" Sq., Flush mount, screw termination
711-0201	115VAC/50Hz., 2.20" Sq., Flush mount, screw termination
731-0046	10-80VDC, 2.93" Dia., 3-hole round, screw termination

Dimensions

2.28" Dia. Flush

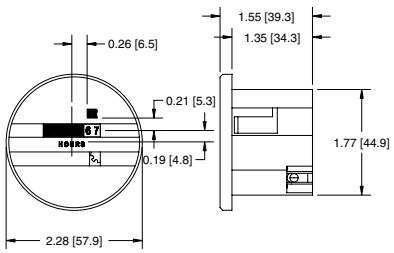

Panel cutout: 1.99" [50] Dia. or 1.81" [46] Sq.

3 - Hole Round

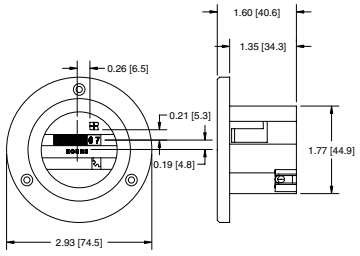

Panel cutout: 1.99" [50] Dia. or 1.81" [46] Sq.
Screws provided: 4-40 x 5/8" [16]
Bolt hole circle: 2.44" [62]

1.89", 2.05" or 2.20" Sq. Flush

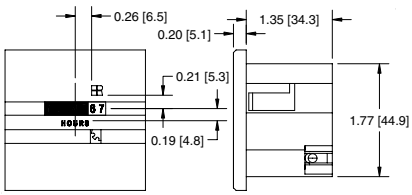

Panel cutout: 1.99" [50] Dia. or 1.81" [46] Sq.
(for 1.89" Sq. use 1.81" [46] Sq. cutout only)

Applications

Medical equipment

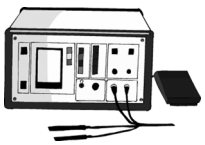

Test equipment

Office equipment

Description

A compact, economical, 6 or 7 figure, non-reset, electromechanical counter designed for general purpose industrial and commercial counting applications. It is designed for a variety of mounting methods as required by the application. Commonly used for coin-operating equipment, photocopiers and vending machines.

Features

- 6 or 7 figure
- Compact
- Non-reset
- Variety of mounting options

Options

- Voltages
- Lead lengths
- 5 figure

Specifications

Figures: 6 or 7 figures, white on black, 0.17" [4.3mm] high
Reset: None
Speed: 1,000 counts/minute AC, (min. 30ms - on, 30ms - off)
1,200 counts/minute DC, (min. 25ms - on, 25ms - off)
Power: AC: 24VAC ~ 4 watts
115VAC ~ 3.5 watts
230VAC ~ 5 watts
DC: 12/24VDC ~ 2 watts

Mounting: Panel or base
Terminations: (2) #22 AWG 105°C wire leads, 12" [305mm] long
Operating Life: Beyond 10 million counts
Temp. Range: -15°F to +140°F [-26°C to +60°C]
Approvals: UL Recognized, CSA Certified, CE Compliant
Weight: 3.5 oz. [99g]

Models	Description
P2-4816	115VAC, 6 figures, P panel mount
~~P8-4816~~	~~24VDC, 6 figures, P panel mount~~
R2-4816	115VAC, 6 figures, R panel mount
SR2-4816	115VAC, 6 figures, SR panel mount
SR8-4816	24VDC, 6 figures, SR panel mount
V1-4816	230VAC, 6 figures, V base mount
V2-4816	115VAC, 6 figures, V base mount
V3-4816	24VAC, 6 figures, V base mount
V8-4816	24VDC, 6 figures, V base mount
V9-4816	12VDC, 6 figures, V base mount

Models	Description
D8-4817	24VDC, 7 figures, D base mount
P2-4817	115VAC, 7 figures, P panel mount
P8-4817	24VDC, 7 figures, P panel mount
R8-4817	24VDC, 7 figures, R panel mount
SR8-4817	24VDC, 7 figures, SR panel mount
V2-4817	115VAC, 7 figures, V base mount
V8-4817	24VDC, 7 figures, V base mount

* Items in bold are normally in factory stock.

Applications

Control panels

Gaming machines

Vending machines

Coin-operated equipment

Photocopiers

Dimensions

D - Mount

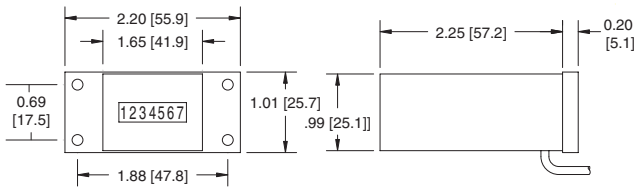

Mounting holes: 0.15” [3.8] Dia.

SR - Mount

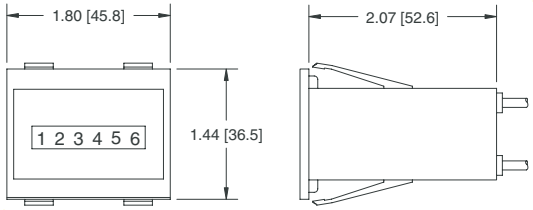

Panel cutout: 1.67” x 1.29” [42.4 x 32.8mm]
Recommended panel thickness: 0.04” to 0.08” [1.0 to 2.0mm]

P - Mount

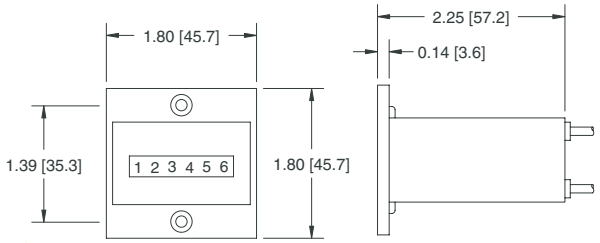

Mounting holes: For #5 flat head screw
Panel cutout: 1.72” x 1.05” [43.7 x 26.7mm]

R - Mount

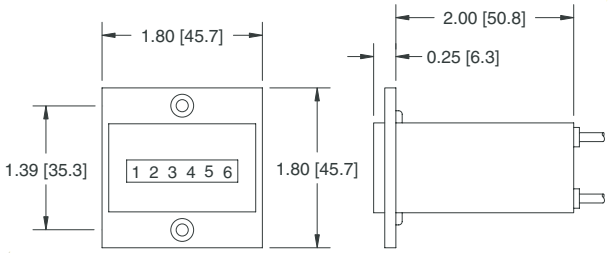

Mounting holes: For #5 flat head screw
Panel cutout: 1.72” x 1.05” [43.7 x 26.7mm]

V - Mount

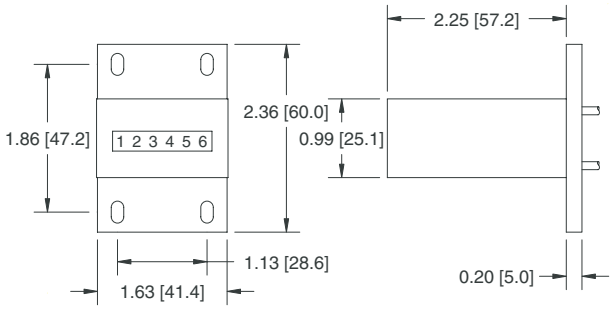

Mounting holes: 0.16” x 0.28” [4.1 x 7.1mm] slots

Ground Fault Products

Heavy Duty Commercial and Hospital Grade GFCI Receptacles with Auto Grounding

15 and 20 Ampere, 125 Volts AC
2 Pole, 3 Wire Grounding

Meets UL Standard 943
Class A GFCI

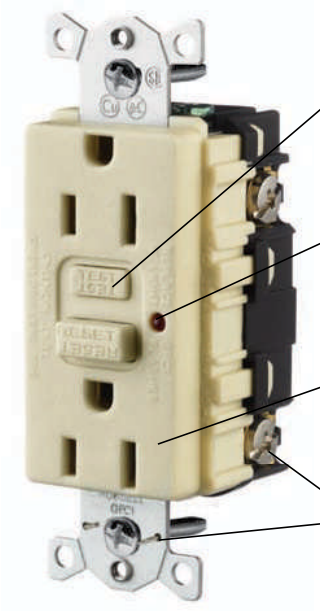

GF15ILA

10kA Short Circuit Current Rating

Comprehensive diagnostics
- When test button is actuated, both the electronic components and mechanical trip mechanism are functionally tested

Ground fault indicator
- Flashing **RED** indicates device has lost capability to provide protection

No power at face if reverse wired
- Open circuit condition eliminates false assumption of protection at face

Installation ease
- Internal back wiring
- Automatic grounding feature
- Captive mounting screws

GF15ILA

GF20WLA

GFR8200HOWLA

Circuit Guard® GFCI Receptacles

15A 125V NEMA 5-15R | 20A 125V NEMA 5-20R

Description	Rating	Color	Catalog Number	
Flush, nylon face, back and side wired, multiple drive screws, automatic grounding clip.	15 and 20A 125V AC	Almond	**GF15ALLA**	**GF20ALLA**
		Black	**GF15BKLA**	**GF20BKLA**
		Brown	**GF15LA**	**GF20LA**
		Gray	**GF15GYLA**	**GF20GYLA**
		Ivory	**GF15ILA**	**GF20ILA**
		Light Almond	**GF15LALA**	**GF20LALA**
		Office White	**GF15OWLA**	**GF20OWLA**
		Red	**GF15RLA**	**GF20RLA**
		White	**GF15WLA**	**GF20WLA**

Hospital Grade ● Circuit Guard® GFCI Receptacles

15A 125V NEMA 5-15R | 20A 125V NEMA 5-20R

Description	Rating	Color	Catalog Number	
Flush, nylon face, back and side wired, multiple drive screws, automatic grounding clip.	15 and 20A 125V AC	Almond	**GFR8200HALLA**	**GFR8300HALLA**
		Black	**GFR8200HBKLA**	**GFR8300HBKLA**
		Brown	**GFR8200HLA**	**GFR8300HLA**
		Gray	**GFR8200HGYLA**	**GFR8300HGYLA**
		Ivory	**GFR8200HILA**	**GFR8300HILA**
		Light Almond	**GFR8200HLAA**	**GFR8300HLAA**
		Office White	**GFR8200HOWLA**	**GFR8300HOWLA**
		Red	**GFR8200HRLA**	**GFR8300HRLA**
		White	**GFR8200HWLA**	**GFR8300HWLA**

Note: GFCI type receptacles should not be used in critical care patient areas or for electrical life support equipment applications because of the possibility of power interruption. All GFCI receptacles listed above are furnished with a matching color nylon wallplate. 20 amp feed-through capability.

Electric Heaters

Application

Designed to protect sensitive mechanical, electrical, and electronic equipment from the harmful effects of condensation, corrosion, and low temperatures. Thermostatically controlled fan-driven heater units maintain a stable temperature within enclosures so critical components can perform more reliably over a longer period of time.

Construction

- Attractive and durable housing is brushed aluminum
- Thermostat, standard on all units, is adjustable from 0°F to 100°F (-18°C to 38°C)
- Fan draws cool air from the bottom of the enclosure and passes this air across the thermostat and heating elements before being released into enclosure cavity
- Heated air is discharged through the top of the heater unit
- Four 10-32 x self-tapping screws are included with each heater
- Ball bearing fan runs continuously for even temperature distribution
- Terminal strip with clamp connector that accepts both solid and stranded wire

Finish

Brushed aluminum.

Industry Standards

UL Component Recognized
CSA Listed
CE

Installation

CAUTION

These electric heaters are not designed for use in dusty, dirty, corrosive, or hazardous locations.

Portions of the heater can get hot. Adequate protection must be taken to protect people from potential burns, and to protect other components from this heat.

This heater can only be installed in a totally enclosed metal enclosure.

Hoffman electric heaters should be centered as low as possible on an interior enclosure panel. This permits the unit to heat the cool air located at the bottom of the enclosure. For maximum efficiency and longevity, the heater should be mounted in a vertical position with the terminal block to the bottom and the air outlet openings at the top in a sealed enclosure free from dust or debris. However, the unit will also effectively distribute heat if turned 90 degrees with the terminal block out the bottom and the air outlet at the side. Although enclosure panels are preferable, heaters may be installed on any flat sheet metal surface. Do not install heaters on wood panels.

Heat sensitive components should not be placed near the heater discharge area since this air can be quite warm. The clearance range defines the space that must be kept free of these components for proper and safe operation of the heater.

Standard Sizes Electric Heaters

Catalog Number	Watts	Voltage	Hz	Amps	Weight lb.	(kg.)
DAH1001A	100	115	50/60	0.9	4.00	(1.81)
DAH1002A	100	230	50/60	0.6	4.00	(1.81)
DAH2001A	200	115	50/60	1.7	4.00	(1.81)
DAH2002A	200	230	50/60	0.9	4.00	(1.81)
DAH4001B	400	115	50/60	3.3	6.00	(2.72)
DAH4002B	400	230	50/60	1.7	6.00	(2.72)
DAH8001B	800	115	50/60	6.5	6.00	(2.72)
DAH8002B	800	230	50/60	3.3	6.00	(2.72)

763 422 2211 FAX 763 422 2600
© 2003 Hoffman Enclosures Inc.

PC - 3000

4-20mA (Transducer) Operated Pump Controller

Features:

- Selectable for Simplex, Duplex, or Triplex Applications
- Operates Pump Up or Pump Down Applications
- 32 Character Alpha-Numeric Liquid Crystal Display for Level, Status, and Setpoint Information
- Pump Alternation Selection Switch Turns Alternation On or Off and Provides Selection of the Lead Pump if Alternation is Off
- Built in Elapsed Time Meters for All Pumps
- 4-20mA. Main Sensor Input with Loop Power Supply for Easy Connection to most Transducers and Transmitters
- Pump Seal Fail and Over Temp Inputs w/ Indication
- Scalable 4-20mA. Level Output Transmitter
- Built in Single Float Backup System
- Three Auxillary Inputs
- Built in Horn Relay with Input for External Mute Button
- Relay Outputs for Both High and Low Level Alarms
- Individually Selectable On/Off Setpoints for Up to Three Pumps
- All Inputs are Filtered and Transient Protected
- Built in Software - No Programming Required
- Simple Menu Structure for Easy Display and Modification of Setpoints and Setup Configuration
- Removable "Quick Connect" Terminal Strips

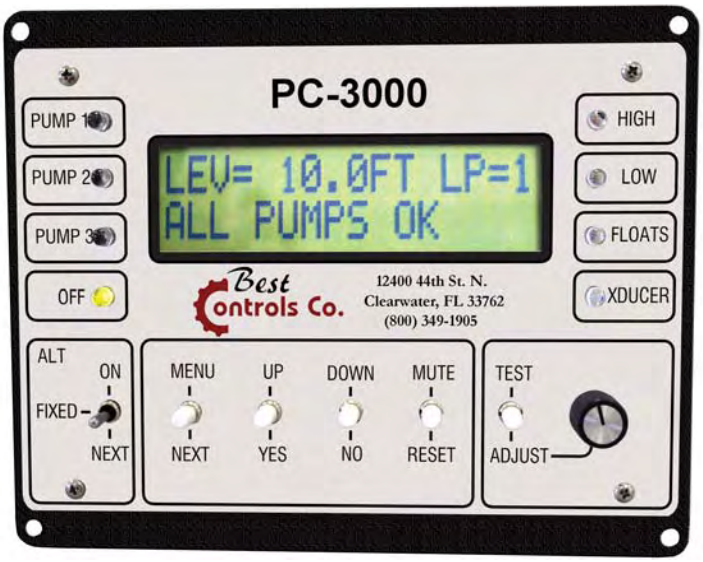

4-20mA Input with Back-Up Float

(Typically Submerisble Transducer)

PRIMEX CONTROLS

PC-3000 CONTROLLER

POWER UP (MAIN SCREEN)

LEV= XX.X FT LP=X
ALL PUMPS OK

DEPRESS [MENU] FOR 10 SEC.

DEPRESS [UP] & [DOWN] FOR 10 SECONDS

LEVEL AT WHICH THE LEAD PUMP WILL START

LEV= XX.X FT LP=X
LEAD ON = XX.XFT *

DEPRESS [NEXT] #

LEVEL AT WHICH THE LEAD PUMP WILL STOP

LEV= XX.X FT LP=X
LEAD OFF= XX.XFT *

DEPRESS [NEXT] #

LEVEL AT WHICH THE LAG PUMP WILL START

LEV= XX.X FT LP=X
LAG ON = XX.XFT *

IF THE CONTROLLER IS CONFIGURED FOR ONLY ONE PUMP, THE MENU WILL SKIP TO THE HIGH ALARM SETUP SCREEN.

DEPRESS [NEXT] #

LEVEL AT WHICH THE LAG PUMP WILL STOP

LEV= XX.X FT LP=X
LAG OFF = XX.XFT*

DEPRESS [NEXT] #

LEVEL AT WHICH THE LAG2 PUMP WILL START

LEV= XX.X FT LP=X
LAG2 ON = XX.XFT *

IF THE CONTROLLER IS CONFIGURED FOR ONLY TWO PUMPS, THE MENU WILL SKIP TO THE HIGH ALARM SETUP SCREEN.

DEPRESS [NEXT] #

LEVEL AT WHICH THE LAG2 PUMP WILL STOP

LEV= XX.X FT LP=X
LAG2 OFF = XX.XFT*

DEPRESS [NEXT] #

LEVEL AT WHICH THE THE HIGH ALARM WILL BE SET

LEV= XX.X FT LP=X
HI ALARM = XX.XFT*

DEPRESS [NEXT] #

LEVEL AT WHICH THE THE LOW ALARM WILL BE SET

LEV= XX.X FT LP=X
LO ALARM = XX.XFT*

DEPRESS [NEXT] #

*

TO MAKE CHANGES IN THIS VALUE, PRESS THE [UP] OR [DOWN] OR HOLD THE [ADJ] IN THEN TURN THE [ADJ KNOB] UNTIL THE VALUE IS CORRECT. WHEN COMPLETE PRESS THE [NEXT]

NOTE:
AT ANY TIME YOU CAN DEPRESS THE [RESET] TO RETURN TO THE MAIN SCREEN.

#

IF THE CURRENT VALUE HAS CHANGED, THE SCREEN WILL ASK IF YOU WANT TO SAVE THE CHANGE.

[SAVE ? (Y/N)]

TO SAVE THE VALUE DEPRESS THE [YES]

TO DISCARD THE CHANGE, DEPRESS THE [NO]

ALTERNATION

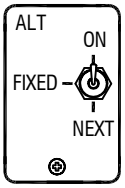

- TO SET ALTERNATION ON PUSH ALT SWITCH UP.
- TO SET ALTERNATION OFF PUSH ALT SWITCH DOWN UNTIL REQUIRED LEAD PUMP IS DISPLAYED IN UPPER RIGHT OF DISPLAY. [LP=X]

DN = PUMP DOWN WITH LEVEL IN FEET
UPF = PUMP UP WITH LEVEL IN FEET
UPP = PUMP UP WITH LEVEL IN PSI

RANGE IN FEET OF THE LEVEL TRANSMITTER

LEV= XX.X FT LP=X
MAX LEVEL= XX.XFT*

DEPRESS [NEXT] # (00.0 TO 50.8 FT)

LEVEL WHEN THE XDUCER IS OUT OF THE WATER

LEV= XX.X FT LP=X
OFFSET XX.XFT *

DEPRESS [NEXT] # (00.0 TO 12.6 FT)

NUMBER OF PUMPS

LEV= XX.X FT LP=X
HOW MANY PUMPS X*

DEPRESS [NEXT] # (1 TO 3)

DELAY IN SECONDS BETWEEN PUMP STARTS

LEV= XX.X FT LP=X
START DELAY XXXS *

DEPRESS [NEXT] # (0 TO 255 SEC.)

DELAY IN SECONDS BETWEEN PUMP STOPS

LEV= XX.X FT LP=X
STOP DELAY XXXS *

DEPRESS [NEXT] # (0 TO 127 SEC.)

MIN TIME FOR SETPOINT SATISFACTION

LEV= XX.X FT LP=X
TIME AT SP XXXS *

DEPRESS [NEXT] # (0 TO 31 SEC.)

HIGH ALARM LATCH UP

LEV= XX.X FT LP=X
HIGH LATCH XX *

DEPRESS [NEXT] # (YES OR NO)

CONTROLLER PUMP DIRECTION

LEV= XX.X FT LP=X
PUMP UP/DN XX *

DEPRESS [NEXT] # (UP OR DOWN)

(OVER TO BACK PAGE)

QUICK SETUP CHART

PRIMEX PC-3000 QUICK SETUP CHART

(FROM OTHER SIDE OF QUICK SETUP CHART)

*
TO MAKE CHANGES IN THIS VALUE, PRESS THE
UP OR DOWN OR HOLD THE
ADJ IN THEN TURN THE ADJ KNOB
UNTIL THE VALUE IS CORRECT. WHEN COMPLETE
PRESS THE NEXT

#
IF THE CURRENT VALUE HAS CHANGED, THE SCREEN
WILL ASK IF YOU WANT TO SAVE THE CHANGE.
SAVE ? (Y/N)
TO SAVE THE VALUE DEPRESS THE
YES
TO DISCARD THE CHANGE, DEPRESS THE
NO

BACKUP CONTROLLER OFF DELAY TIME

```
LEV= XX.X FT LP=X
BACKUP TIME  XXXS *
```

DEPRESS NEXT # (0 TO 255 SEC.)
SET TO ZERO TO DISABLE

TIME FROM PUMP START TO RUN CONFIRM

```
LEV= XX.X FT LP=X
START TEST   XXXS  *
```

DEPRESS NEXT # (0 TO 63 SEC.)
SET TO ZERO TO DISABLE

SEAL LEAK SENSOR SETUP

USE THE UP AND DOWN KEYS TO SELECT ONE OF THE FOLLOWING:		
SEAL NORM AUTO R	SEAL FAIL WHEN SENSOR < 50K OHM	RESETS WHEN CLEAR
SEAL NORM LATCH	SEAL FAIL WHEN SENSOR < 50K OHM	MANUAL RESET
SEAL INVR AUTO R	SEAL FAIL WHEN SENSOR > 50K OHM	RESETS WHEN CLEAR
SEAL INVR LATCH	SEAL FAIL WHEN SENSOR > 50K OHM	MANUAL RESET

```
LEV= XX.X FT LP=X
SEAL XXX  YYYYY *
```

DEPRESS NEXT #

TEMPERATURE SENSOR SETUP

USE THE UP AND DOWN KEYS TO SELECT ONE OF THE FOLLOWING:		
TEMP NORM AUTO R	TEMP FAIL WHEN SENSOR OPEN	RESETS WHEN CLEAR
TEMP NORM LATCH	TEMP FAIL WHEN SENSOR OPEN	MANUAL RESET
TEMP INVR AUTO R	TEMP FAIL WHEN SENSOR SHORTED	RESETS WHEN CLEAR
TEMP INVR LATCH	TEMP FAIL WHEN SENSOR SHORTED	MANUAL RESET

```
LEV= XX.X FT LP=X
TEMP XXX  YYYYY *
```

DEPRESS NEXT #

AUXILLARY RELAY SETUP

USE THE UP AND DOWN KEYS TO SELECT ONE OF THE FOLLOWING:		
AUX R	HORN	AUX RELAY IS HORN RELAY
AUX R	SEAL	AUX RELAY WILL CLOSE ON ANY SEAL FAIL
AUX R	TEMP	AUX RELAY WILL CLOSE ON ANY TEMP FAIL
AUX R	SEAL TEMP	AUX RELAY WILL CLOSE ON ANY SEAL OR TEMP FAIL
AUX R	ALL	COMMON ALARM RELAY (HIGH, LOW, TEMP, OR PUMP FAIL)

```
LEV= XX.X FT LP=X
AUX R        HORN *
```

DEPRESS NEXT #

ETM VIEW

POWER UP (MAIN SCREEN)

```
LEV= XX.X FT LP=X
ALL PUMPS OK
```

DEPRESS DOWN

DEPRESS UP / DEPRESS DOWN

```
LEV= XX.X FT LP=X
ETM1 XXXXX.X  HR
```

DEPRESS UP / DEPRESS DOWN

```
LEV= XX.X FT LP=X
ETM2 XXXXX.X  HR
```

DEPRESS UP / DEPRESS DOWN

```
LEV= XX.X FT LP=X
ETM3 XXXXX.X  HR
```

DEPRESS UP

USE THE UP AND DOWN KEYS TO SELECT
NORMAL OR JOCKEY PUMP ALTERNATION
(TRHEE PUMP SYSTEMS ONLY)

```
LEV= XX.X FT LP=X
ALTERNATE XXXXX   *
```

DEPRESS NEXT #

USE THE UP AND DOWN KEYS TO SELECT
THE MAXIMUM NUMBER OF PUMPS
WHICH CAN BE ON AT ONCE

```
LEV= XX.X FT LP=X
MAX ON AT ONCE   X*
```

DEPRESS NEXT # (1 TO 3)

LEVEL AT WHICH THE ANALOG OUTPUT IS 4 Ma.

IF A OUT LOW IS SET HIGHER THAN
A OUT HIGH THEN THE ANALOG
OUTPUT WILL BE INVERTED.

```
LEV= XX.X FT LP=X
A OUT LOW  XX.XFT  *
```

DEPRESS NEXT # (OFFSET TO FULL SCALE)

LEVEL AT WHICH THE ANALOG OUTPUT IS 20 Ma.

NOTE:
AT ANY TIME YOU CAN DEPRESS
THE RESET TO RETURN
TO THE MAIN SCREEN.

```
LEV= XX.X FT LP=X
A OUT HI   XX.XFT  *
```

DEPRESS NEXT # (OFFSET TO FULL SCALE)

Sunlight Visible LED Alarm Light

Part No. SunBurst II: SBN120AC, SBN1224AD

The Ingram SunBurst II is a super bright, daylight visible LED light that can not be ignored. It is designed for use as an alarm beacon. It requires only a 3/4" knockout (1-1/16" diameter hole) to mount. It can be installed on panels up to 1/4" thick. Meets UL Type 3, 3R, 4, 4X, 12, and, 13 requirements.

Features

- Super Bright - Daylight Visible
- 2 operation modes: steady on and flash
- Molded from GE Lexan
- Hermetically sealed for corrosion resistance and reliability
- Available with red, amber, green, clear and blue lens
- Easy one hole mounting
- Provides 360° visibility
- Comes with gasket and Lexan mounting nut
- UL Recognized - File E121431

Technical Specifications

• Voltage:	SBN120AC	120VAC
	SBN1224AD	12/24VDC or VAC
• Current :	SBN120AC	48mA (max.)
	SBN1224AD	230mA (max.)@12V
		125mA flashing
		110mA (max.)@24V
		67mA flashing

- Flash rate: 60 flashes per minute
- Mounting Nut Torque: 14 in-lbs.

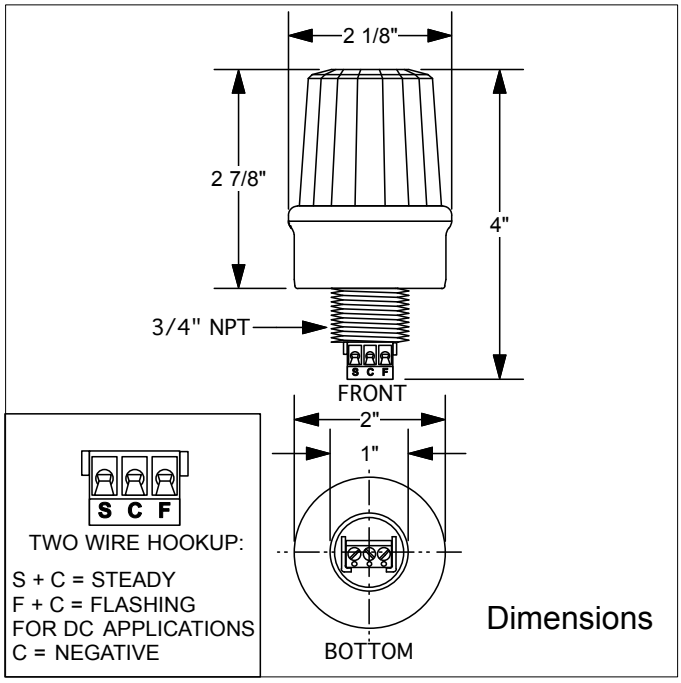

Dimensions

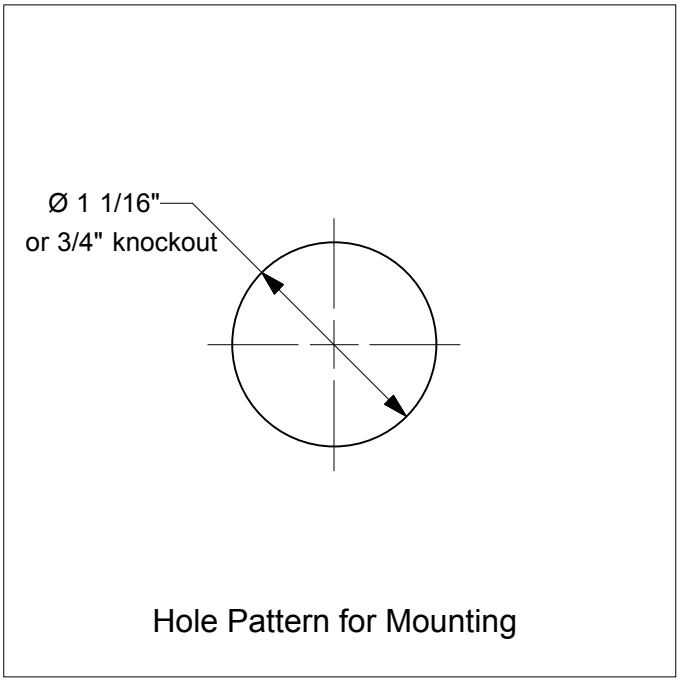

Hole Pattern for Mounting

8725 Youngerman Court, Ste 206, Jacksonville, FL 32244 ■ 888-875-2221 ph (904)778-2444 fax ■ Website:www.ingramproducts.com ■ e-mail: info@ingramproducts.com

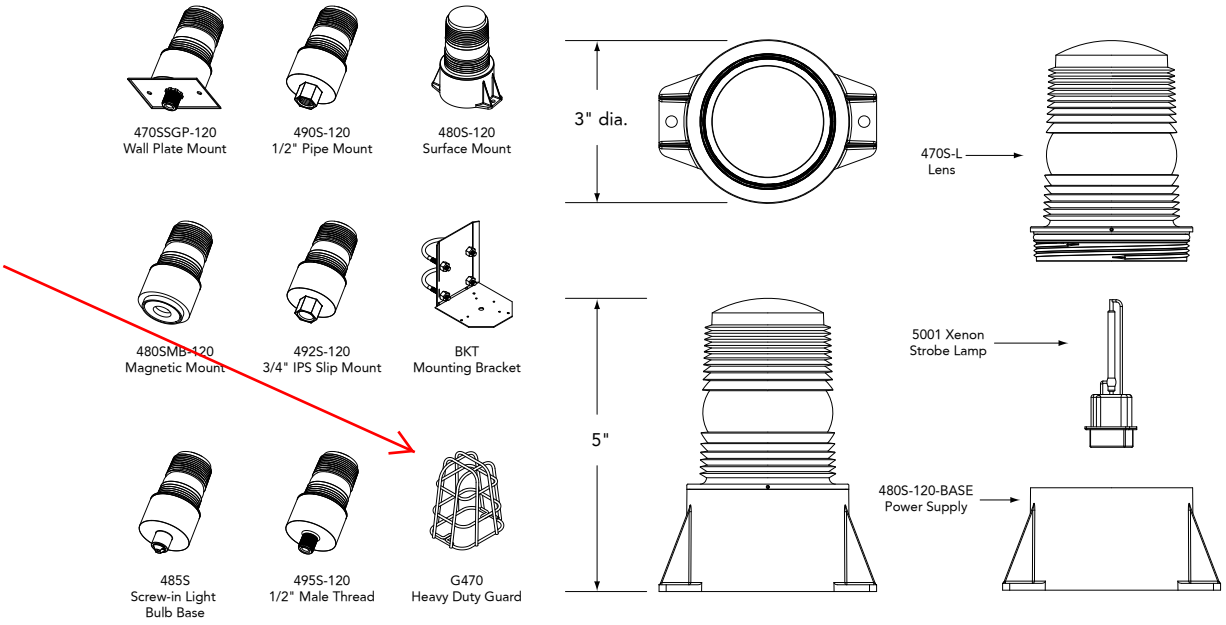

Specifications

Item	Description
Voltage and Amperage	120VAC and 240VAC draw 0.07A average
Power Supply Output 2.7 Watts	2.3 joules per flash
Flash Rate	60 to 80 flashes per minute
Size and Weight	5" tall x 3" dia. x 0.5 lbs (127mm x 76mm x 0.23kg)

Available Options

NOTE: All "/" options are factory installed only.

Model No.	Description
G470	Heavy duty guard
BKT	Mounting bracket
LBO–MINI	Lens blackout segment 180°
MICROSHIELD	Vinyl, 180° lens blackout
/TRIAC–SW	Solid state relay option

Replacement Parts

Model No.	Description
5001	Xenon strobe lamp
470S–L	Colored lens (please specify color)
480S–120–PSA	120VAC power supply, surface mount
480SMB–120–PSA	120VAC power supply, magnetic mount
485S–120–PSA	120VAC power supply, screw-in light bulb base
485S–240–PSA	240VAC power supply, screw-in light bulb base
490S–120–PSA	120VAC power supply, 1/2" female pipe mount
490S–240–PSA	240VAC power supply, 1/2" female pipe mount
492S–120–PSA	120VAC power supply, 3/4" IPS slip mount
495S–120–PSA	120VAC power supply, 1/2" male thread mount
495S–240–PSA	240VAC power supply, 1/2" male thread mount

Box Lug Termination

CLASS 9080		TYPE GM6	TYPE GR6	TYPE GR6T
		High Density Block	Without Test Probe Adapter	With Test Probe Adapter
Maximum Voltage Rating		600	600	600
Maximum Amperage Ratingv ✭	UL	30	60	60
	CSA	30	60	60
Wire Range		#22 to #10 AWG	#22 to #8 AWG	#22 to #8 AWG
Maximum Wire Combination		1 - #10 1 - #12 1 - #14 1 or 2 - #16 1 or 2 - #18 1 to 5 - #20 1 to 8 - #22	1 - #8 1 - #10 1 to 3 - #12 1 to 4 - #14 1 to 4 - #16 1 to 5 - #18 1 to 8 - #20 1 to 10 - #22	1 - #8 1 - #10 1 to 3 - #12 1 to 4 - #14 1 to 4 - #16 1 to 5 - #18 1 to 8 - #20 1 to 10 - #22
Wire Type		Solid or Stranded Copper Wire	Solid or Stranded Copper Wire	Solid or Stranded Copper Wire
Density - Sections per foot		51	34	34
Approx. Dimensions (D)x(H)x(W)		1.72 x 1.82 x .235 inches 44 x 46 x 6 mm	1.72 x 1.82 x .35 inches 44 x 46 x 9 mm	1.72 x 1.82 x .35 inches 44 x 46 x 9 mm
Block Material		Nylon		
Busbar Material		Tin Plated Brass	N/A	N/A
Screw Material		Steel with Zinc Plating and Chromate Film		
Box Lug Material		Zinc Plated Steel	Copper	
Temperature Rating		-40 to 257° F -40 to 125° C	-40 to 257° F -40 to 125° C	-40 to 257° F -40 to 125° C
Flammability Rating		UL94V2	UL94V2	UL94V2
Recommended Screw Tightening Torque		7-8 lbf-in 0.8-0.9 N-m	18-20 lbf-in 2.1-2.3 N-m	18-20 lbf-in 2.1-2.3 N-m
Listings		File E60616 Guide XCFR2	File LR62144 Class 6228 01	
FINGERSAFE® per DIN 57470		YES	YES	YES
Block: Natural (White)		GM6	GR6	GR6T
Black		GMB6	GRB6	
Blue		GML6	GRL6	
Green		GMG6	GRG6	
Grey		GME6	GRE6	
Orange		GMS6	GRS6	
Red		GMR6	GRR6	
Yellow		GMY6	GRY6	
End Barrier		GM6B	GM6B	GM6B
6 Foot Assembly		GM6296BC	GR6204BC	
Mounting Track: ▲				
DIN 3 :	0.5 meter long	MH320	MH320	MH320
	1.0 meter long	MH339	MH339	MH339
	2.0 meter long	MH379	MH379	MH379
Standard:	3 Foot Long	GH136	GH136	GH136
Snap-Off:	3 Foot Long	GH236	GH236	GH236
High Rise:	3 Foot Long	GH336	GH336	GH336
End Clamps:	Screw-in	GH10	GH10	GH10
	Slip-in	GH11	GH11	GH11
	DIN 3 End Clamp	MHA10	MHA10	MHA10
Jumpers: 2 pole		GH700	GH72	GH72
6 pole		GH710	GH73	GH73
Fanning Strip			GH52	GH52
Cover			GH62	GH62
Vinyl Marking Strip		GH220	GH220	GH220
Sheets of Blank Marking Tabs			GH200	GH200
Sheets of Marked Tabs			GH210	GH210
Marking Strip End Plug		GH60	GH60	GH60

▲ For additional mounting track, see page 8.

✭ These maximum current values assume the use of insulated copper conductors with 75° C temperature rating, and are calculated based on NEC Article 310, Table 310-16. In most cases this value is the maximum ampacity of that wire or combination of wires (as listed in the above table) which has the greatest current carrying capacity. The actual allowable current for a particular application is dependent upon the number, size, insulation class and other characteristics of the wires used.

Saginaw Control & Engineering
95 Midland Road
Saginaw, MI 48638-5770
Phone: (800)234-6871
Fax: (989)799-4524
http://www.saginawcontrol.com

Part Information - SCE-60EL4812LPPL

SCE-60EL4812LPPL

Application -
Designed to house electrical and electronic controls, instrumentation and components in indoor & outdoor locations. For outdoor applications a drip shield is recommended.

Construction -
- 0.104" carbon steel.
- Seams continuously welded and ground smooth.
- Flange trough collar around all sides of door opening.
- Removable centerpost.
- Heavy duty lifting eyes anchored into reinforced top.
- Body stiffeners.
- Concealed hinges.
- Black key locking padlocking handles.
- 3-point latching mechanism.
- Removable print pocket on main door.
- 12" removable floor stands.
- Panel Supports.
- Provisions for mechanical interlock.
- Oil & water resistant gasket.
- Ground stud on door and body.

Options -
Provisions for mechanical interlock. See Accessory section to order.

Finish -
ANSI-61 gray powder coating inside and out. Optional sub-panels are powder coated white.

Industry Standards - (IS4)
NEMA Type 3R, 4, 12 and Type 13
UL Listed Type 3R, 4 and 12
CSA Type 3R, 4 and 12
IEC 60529 IP 66

Notes -
Special Instructions apply for IS3, IS4 and IS6 to maintain the environmental rating of Type 3R for these parts. Instructions are located on the enclosure door. Drip shield is required on IS3, drip shield is recommended on IS4 and IS6. Drain holes are required on all.

Product Specifications -
Part Number: SCE-60EL4812LPPL
Description: 2DR EL LPPL Enclosure
Height: 60.00"
Width: 48.00"
Depth: 12.00"
Price Code: E2
List Price: $1,997.80
Catalog Page: 104
Est. Ship Weight: 509.00 lbs

Download CAD Package
Add to Bill of Material

Optional Accessories -
SCE-104941 - Interlock, Mechanical for Left Door as Main
SCE-105604 - Interlock, Mechanical for Right Door as Main
SCE-13ELJEXPP - Pocket, Exterior Print
SCE-19ELJEXPP - Pocket, Exterior Print
SCE-60P48 - Subpanel, Bent
SCE-BV4XKIT - Kit, Breather Vent
SCE-DF60EL48 - Panel, Dead Front (Enviroline Floor Mount)
SCE-DS48N4 - Shield, Drip
SCE-DV4XKIT - Kit, Drain Vent
SCE-FS1212 - Shelf, Folding
SCE-FS1818 - Shelf, Folding
SCE-FS2424 - Shelf, Folding
SCE-LF18 - Fixture, LED Light
SCE-LF18NO - Fixture, LED Light w/o Outlet

Similar Part Numbers -
SCE-60EL4818LPPL - 2DR EL LPPL Enclosure
SCE-60EL6012LPPL - 2DR EL LPPL Enclosure
SCE-60EL6018LPPL - 2DR EL LPPL Enclosure
SCE-72EL6012LPPL - 2DR EL LPPL Enclosure
SCE-72EL6018LPPL - 2DR EL LPPL Enclosure

Installation Information -
LED Light Fixture
Mechanical Interlock
Folding Shelf Hole Pattern
Drip Shield Kit Assembly
Drain/Vents
Dead Front 2 Door W/Center Post Installation Instructions

Saginaw Control and Engineering
95 Midland Road
Saginaw, MI 48638-5770
(800)234-6871
Fax: (989)799-4524
SCE@SaginawControl.com

4.04 INSTRUCTIONS FOR CONDUIT ENTRY

A. Conduit Top of Enclosure Entry:

1. Use only U.L. listed rain tight or liquid tight conduit hubs.
2. Install hubs and conduit according to the hub manufacturer's instructions.
3. Punch or drill the correct hole for the size of hub to be used.
4. Capture all drilling fines to prevent interior component damage.

B. Conduit Bottom of Enclosure Entry:

1. Punch or drill correct hole for the size of the conduit to be used.
2. Use only U.L. listed rain tight or liquid tight conduit hubs or sealing locknuts on the outside entry point.
3. Install conduit, hubs or sealing locknuts as per the manufacturer's instructions.
4. Secure conduits on the inside with locknuts.
5. Use plastic bushing or grounding bushing where applicable.

CONDUIT SIZE	HOLE SIZE
1/2"	7/8"
3/4"	1-1/8"
1"	1-3/8"
1-1/4"	1-3/4"
1-1/2"	2"
2"	2-3/8"
2-1/2"	3"
3"	3-5/8"
3-1/2"	4-1/4"
4"	4-5/8"

C. Conduit hole sealing:

1. Seal all unused holes with hole seals that are recognized for use with the enclosure NEMA rating.
2. Install seals according to the seal manufacturer's instructions.

END

OF

SECTION

APPENDIX

This section includes additional manuals from manufacturers.

This section is structured as follows:

A. ALTISTART USER MANUAL
B. PC-300 QUICK START-UP GUIDE

Altistart 48

Guide d'exploitation
User manual
Benutzerhandbuch
Guía de explotación
Guida all'impiego
用户手册

12/2012

Démarreurs-ralentisseurs progressifs,
Soft start- soft stop units,
Sanftanlasser,
Arrancadores, ralentizadores progresivos,
Avviatori-rallentatoriprogressvi,
软起动器

1494409

www.schneider-electric.com

Schneider Electric

Altistart 48

Démarreurs-ralentisseurs progressifs **5**

Soft start-soft stop units **87**

Sanftanlasser **169**

Arrancadores, ralentizadores progresivos **251**

Avviatori-rallentatori progressivi **333**

中文 **页 415**

D'une façon générale toute intervention, tant sur la partie électrique que sur la partie mécanique de l'installation ou de la machine, doit être précédée de la coupure de l'alimentation contrôle (CL1 - CL2) et puissance (1/L1 - 3/L2 - 5/L3) de l'Altistart 48.
En exploitation le moteur peut être arrêté par suppression de l'ordre de marche alors que le démarreur reste sous tension. Si la sécurité du personnel exige l'interdiction de tout redémarrage intempestif, ce verrouillage électronique est insuffisantþ: prévoir une coupure sur le circuit de puissance.

Le démarreur comporte des dispositifs de sécurité qui peuvent en cas de défauts commander l'arrêt du démarreur et par là-même l'arrêt du moteur. Ce moteur peut lui-même subir un arrêt par blocage mécanique. Enfin, des variations de tension ou des coupures d'alimentation peuvent également être à l'origine d'arrêts.
La disparition des causes d'arrêt risque de provoquer un redémarrage entraînant un danger pour certaines machines ou installations, en particulier pour celles qui doivent être conformes aux réglementations relatives à la sécurité.
Il importe donc que, dans ces cas-là, l'utilisateur se prémunisse contre ces possibilités de redémarrage notamment par l'emploi d'un détecteur de vitesse basse, provoquant en cas d'arrêt non programmé du moteur, la coupure de l'alimentation du démarreur.

Les produits et matériels présentés dans ce document sont à tout moment susceptibles d'évolution ou de modification tant au plan technique et d'aspect que de l'utilisation. Leur description ne peut en aucun cas revêtir un aspect contractuel.

L'installation et la mise en œuvre de ce démarreur doivent être effectuées conformément aux normes internationales IEC et aux normes nationales de son lieu d'utilisation. Cette mise en conformité est de la responsabilité de l'intégrateur qui doit respecter entre autres, pour la communauté européenne, la directive CEM.
Le respect des exigences essentielles de la directive CEM est conditionné notamment par l'application des prescriptions contenues dans ce document.

L'Altistartþ48 doit être considéré comme un composant, ce n'est ni une machine ni un appareil prêt à l'utilisation selon les directives européennes (directive machine et directive compatibilité électromagnétique). Il est de la responsabilité de l'intégrateur final de garantir la conformité de sa machine à ces normes.

Sommaire

Les étapes de la mise en œuvre 5
Configuration usine 7
Recommandations préliminaires 8
Caractéristiques techniques 9
Recommandations d'emploi 10
Association démarreur-moteur 13
Encombrement 19
Précautions de montage 21
Montage en coffret ou armoire 22
Borniers puissance 23
Borniers contrôle 28
Câblage / Commandes RUN - STOP 29
Schéma d'application 30
Protections thermiques 40
Afficheur et programmation 44
Option terminal déporté 47
Menu Réglages SEt 48
Menu Protection PrO 53
Menu Réglages avancés drC 57
Menu Affectation des entrées / sorties IO 61
Menu Paramètres 2ème moteur St2 65
Menu Communication COP 69
Menu Paramètre visualisé SUP 71
Tableau de compatibilité 74
Maintenance 75
Défauts - causes - remèdes 76
Tableaux de mémorisation configuration/réglages 82

Les étapes de la mise en œuvre

1 - Réceptionner l'Altistart 48

- S'assurer que la référence du démarreur inscrite sur l'étiquette est conforme au bordereau de livraison correspondant au bon de commande.
- Ouvrir l'emballage, et vérifier que l'Altistart 48 n'a pas été endommagé pendant le transport.

⚠ AVERTISSEMENT

DÉMARREUR-RALENTISSEUR PROGRESSIF ENDOMMAGÉ

N'installez jamais, ni ne faites fonctionner un démarreur-ralentisseur progressif s'il apparaît être défectueux. **Le non-respect de ces instructions peut provoquer la mort, des blessures graves ou des dommages matériels.**

2 - Montage du variateur en position verticale

- Fixer l'Altistart 48, en suivant les recommandations **page 22** and **23**.

3 - Raccorder à l'Altistart 48 :

- Raccorder le démarreur-ralentisseur progressif à la terre.
- Le réseau d'alimentation contrôle (CL1 - CL2), en s'assurant qu'il est hors tension
- Le réseau d'alimentation puissance (1/L1 - 3/L2 - 5/L3), en s'assurant qu'il est hors tension
- Le moteur (2/T1 - 4/T2 - 6/T3) en s'assurant que son couplage correspond à la tension du réseau

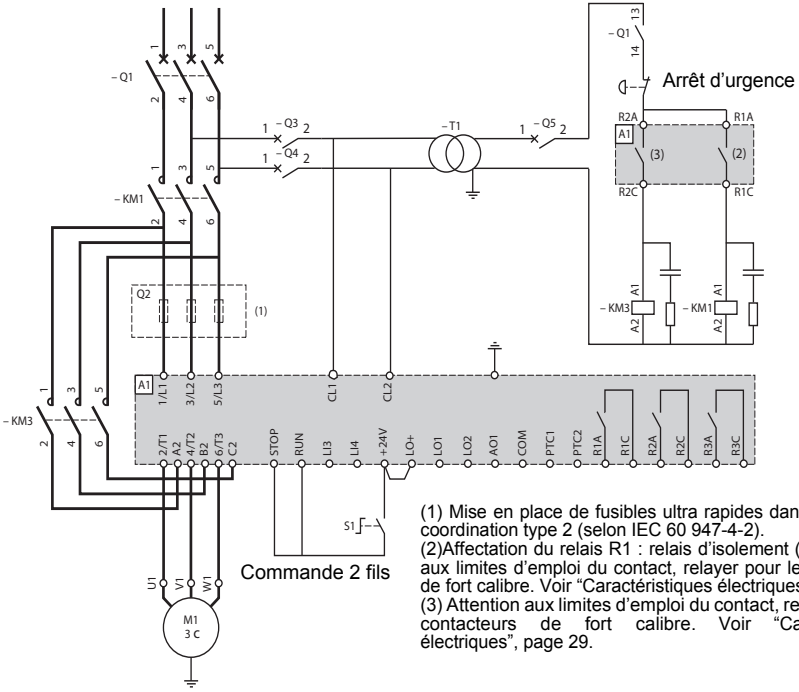

(1) Mise en place de fusibles ultra rapides dans le cas de la coordination type 2 (selon IEC 60 947-4-2).
(2)Affectation du relais R1 : relais d'isolement (r1I). Attention aux limites d'emploi du contact, relayer pour les contacteurs de fort calibre. Voir "Caractéristiques électriques", page 29.
(3) Attention aux limites d'emploi du contact, relayer pour les contacteurs de fort calibre. Voir "Caractéristiques électriques", page 29.

Nota: Pour d'autres schémas de câblage, **voir page 31 et page 35**.
Dans le cas d'une utilisation de l'ATS48●●●Q / l'ATS48●●●YS316 dans les enroulements triangle du moteur suivre les recommandations **page 12**, **page 13** et schémas **page 33**.

4 - Mettre le contrôle sous tension (CL1-CL2)

- Mise en marche sans la partie puissance et sans donner l'ordre de marche.
- Vérifier que S1 est ouvert.
- Fermer: Q1, ensuite Q3 puis Q4.
- le démarreur affiche: nLP (pour signaler que la puissance est hors tension).

ATTENTION

RISQUE D'ENDOMMAGEMENT DU DÉMARREUR PROGRESSIF

- Verifier l'alimentation sur CL1 - CL2:
  ATS48●●●Q doit être à 220 - 415 V AC
  ATS48●●●Y doit être à 110 - 230 V AC

Le non-respect de ces instructions peut provoquer des dommages matériels

5 - Régler le courant nominal moteur In

- Régler la valeur du courant nominal moteur indiqué sur la plaque signalétique,

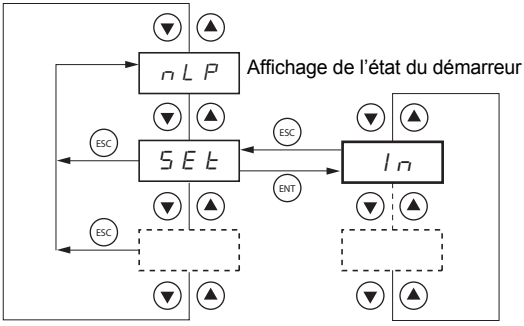

6 - Mettre la puissance sous tension (1/L1 - 3/L2 - 5/L3)

- Fermer Q5.
- Le démarreur affiche: rdY (pour signaler que la puissance est hors tension)

7 - Démarrer le moteur

- Appuyer sur "S1" pour démarrer l'installation.

8 - Informations de dépannage

- Voir Défauts - causes - remèdes **page 77**

ATTENTION

MAUVAISE PROTECTION CONTRE LES SURINTENSITÉS

Le démarreur ATS 48 est configuré en usine pour pouvoir démarrer une application standard ne nécessitant pas de fonction spécifique, avec une classe de protection moteur : classe 10.
Une modification des réglages reste possible suivant la méthode d'accès aux paramètres, **page 46 .**
Dans tous les cas le paramètre In doit être ajusté à la valeur de courant indiquée sur la plaque moteur.
Le non-respect de ces instructions peut provoquer des dommages matériels.

Configuration usine

Préréglages

L'Altistart 48 est préréglé en usine pour les conditions d'emploi les plus courantes :

- Utilisation de l'ATS 48 sur le réseau d'alimentation du moteur (et non inséré en "triangle" dans les enroulements du moteur)
- Courant nominal moteur In :
  - ATS 48 •••Q : préréglé pour un moteur standard 415 volts 4 pôles
  - ATS 48 •••Y : préréglé au courant NEC, moteur 460 volts
- Courant de limitation (ILt) : 400% du courant In du moteur
- Rampe d'accélération (ACC) : 15 secondes
- Couple initial au décollage (tq0) : 20% du couple nominal
- Arrêt (StY) : Arrêt roue libre (-F-)
- Protection thermique moteur (tHP) : courbe de protection classe 10
- Affichage : rdY (Démarreur prêt) avec tensions puissance et contrôle présentes, courant moteur en fonctionnement
- Entrées logiques :
  - LI1 : STOP
  - LI2 : RUN
  - LI3 : Forçage arrêt roue libre (LIA)
  - LI4 : Forçage mode local (LIL)
- Sorties logiques :
  - LO1 : Alarme thermique moteur (tA1)
  - LO2 : Moteur alimenté (rnI)
- Sorties relais :
  - R1 : Relais de défaut (r1I)
  - R2 : Relais de court-circuitage en fin de démarrage
  - R3 : Moteur alimenté (rnI)
- Sortie analogique :
  - AO : Courant moteur (OCr, 0 - 20 mA)
- Paramètres de communication :
  - Connecté via la liaison série, le démarreur a l'adresse logique (Add) = « 0 »
  - Vitesse de transmission (tbr) : 19200 bits par seconde
  - Format de communication (FOr) : 8 bits, sans parité, 1 bit de stop (8n1)

Si les valeurs ci-dessus sont compatibles avec l'application, le démarreur peut être utilisé sans modification des réglages.

Recommandations préliminaires

Manutention et stockage

Pour assurer la protection du démarreur avant son installation, manutentionner et stocker l'appareil dans son emballage.

Manutention à l'installation

La gamme Altistart 48 comprend 6 tailles d'appareils, de masses et de dimensions différentes.

Les petits démarreurs peuvent être extraits de leur emballage et installés sans appareil de manutention.

Les gros démarreurs nécessitent l'utilisation d'un appareil de manutention; à cet effet ils sont munis "d'oreilles" de manutention. Respecter les précautions décrites ci-dessous :

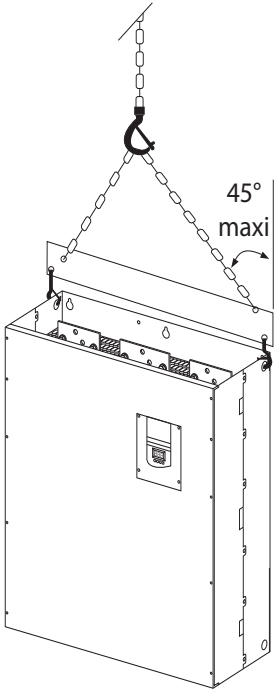

Ne pas manipuler le démarreur par les barres de puissance

Caractéristiques techniques

Environnement

Degré de protection	• IP 20 pour ATS 48D17• à C11• • IP00 pour ATS 48C14• à M12• (1)
Tenue aux vibrations	Selon IEC 68-2-6 : • 1,5 mm crête de 2 à 13 Hz • 1 gn de 13 à 200 Hz.
Tenue aux chocs	Selon IEC 68-2-27 : • 15 gn, 11 ms
Pollution ambiante maximale	Degréþ3 selon IEC 947-4-2.
Humidité relative maximale	93 % sans condensation ni ruissellement, selon IEC 68-2-3
Température de l'air ambiant au voisinage de l'appareil	Pour stockage: -25°C à +70°C Pour fonctionnementþ: • - 10 °C à + 40 °C sans déclassement • jusqu'à +60 °C en déclassant le courant de 2 % par °C au dessus de 40°C
Altitude maximale d'utilisation	1000 m sans déclassement (au-delà, déclasser le courant de 2 % par 100 m supplémentaires)
Position de fonctionnement	Verticale à ± 10 °

(1) Les ATS 48 de degré de protection IP00 doivent être équipés d'une barrière de protection pour assurer la sécurité des personnes contre les contacts électriques

Couple disponible

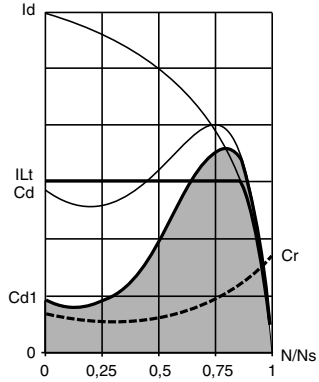

Les courbes Cd et Id représentent le démarrage d'un moteur asynchrone en direct sur le réseau.

La courbe Cd1 indique l'enveloppe du couple disponible avec un ATS 48, qui est fonction du courant de limitation ILt. La progressivité du démarrage est obtenue par le contrôle du couple moteur à l'intérieur de cette enveloppe.

Cr : couple résistant, qui doit être toujours inférieur au couple Cd1.

Choix du démarreur-ralentisseur

Un service moteur S1 correspond à un démarrage suivi d'un fonctionnement à charge constante permettant d'atteindre l'équilibre thermique.
Un service moteur S4 correspond à un cycle comprenant un démarrage, un fonctionnement à charge constante et un temps de repos. Ce cycle est caractérisé par un facteur de marche.

L'Altistart 48 doit être choisi en fonction du type d'application "standard" ou "sévère" et de la puissance nominale du moteur. Les applications "standard" ou "sévère" définissent les valeurs limites de courant et de cycle pour les services moteur S1 et S4.

Attention : ne pas utiliser l'Altistart 48 en amont de récepteurs autres que des moteurs (par exemple transformateurs ou résistances sont interdits). Ne pas raccorder des condensateurs de compensation du facteur de puissance aux bornes d'un moteur commandé par un Altistart 48

Application standard

Exemple : pompe centrifuge.
En application standard l'Altistart 48 est dimensionné pour répondre à :
- en service S1 : un démarrage à 4 In pendant 23 secondes ou un démarrage à 3 In pendant 46 secondes, en partant de l'état froid.
- en service S4 : un facteur de marche de 50 % et 10 démarrages par heure, avec 3 In pendant 23 secondes ou 4 In pendant 12 secondes ou un cycle thermiquement équivalent.

Dans ce cas la protection thermique moteur doit être positionnée en classe de protection 10.

Application sévère

Exemple : broyeur.
En application sévère l'Altistart 48 est dimensionné pour répondre à un service S4 avec un facteur de marche de 50 % et 5 démarrages par heure, à 4 In pendant 23 secondes ou un cycle thermiquement équivalent.
Dans ce cas la protection thermique moteur doit être positionnée en classe de protection 20. Le courant **In ne doit pas rester à son réglage usine**, il doit être ajusté à la valeur indiquée sur la plaque moteur.

Nota : il est possible de surclasser le démarreur d'un calibre, par exemple choix d'un ATS 48D17Q pour un moteur 11 kW - 400 V en service moteur S4.
Pour cela, court-circuiter l'Altistart en fin de démarrage. Ceci permet 10 démarrages par heure à 3 In pendant 23 secondes au maximum ou équivalent et la protection thermique moteur doit être positionnée en classe 10.

L’Altistart 48 gamme Q (230-415 V) connecté en ligne avec le moteur ou dans l’enroulement triangle du moteur

L’Altistart 48 connecté dans la ligne d’alimentation du moteur

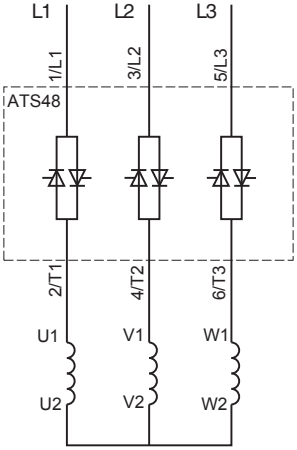

Le couplage moteur dépend de la tension d’alimentation, **ici en étoile**

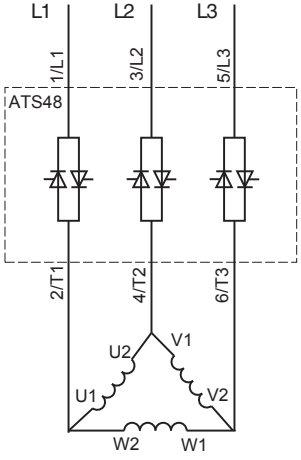

Le couplage moteur dépend de la tension d’alimentation, **ici en triangle**

L'Altistart 48 connecté dans l'enroulement triangle du moteur en série avec chaque enroulement

Les ATS48●●●Q ou ATS48●●●YS316 associés à des moteurs couplés en triangle peuvent être insérés en série dans les enroulements du moteur. Ils sont ainsi soumis à un courant inférieur au courant en ligne dans un rapport Ö3, ce qui permet d'utiliser un démarreur de plus faible calibre.

Cette possibilité est configurable dans le menu Réglages avancés (dLt = On).
Les réglages du courant nominal et du courant de limitation, ainsi que le courant affiché en fonctionnement restent les valeurs en ligne, évitant le calcul pour l'utilisateur.

Le montage de l'Altistart 48 connecté dans l'enroulement triangle moteur n'est possible que pour les démarreurs ATS48●●●Q ou ATS48●●●YS316 . Ce montage n'autorise :
- pas de freinage dynamique
- pas de fonction cascade
- pas de fonction préchauffage

Voir les tableaux page pour définir l'association démarreur-moteur.

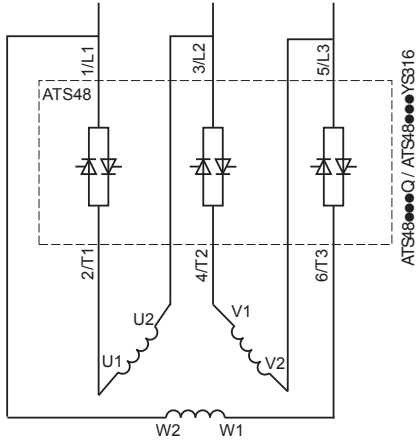

Couplage dans l'enroulement triangle du moteur

Exemple :
Un moteur 400 V de 110 kW avec un courant ligne de 195 A (courant plaqué pour le couplage triangle).
Le courant dans chaque enroulement est égale à 195/1,7 soit 114 A.
On choisira le calibre du démarreur qui possède le courant nominal maximum permanent juste au dessus de ce courant soit le calibre 140 A (ATS48C14Q pour une application standard).
Afin d'éviter ce calcul, utiliser les tableaux pages et qui indiquent directement le calibre du démarreur correspondant à la puissance moteur en fonction du type d'application.

Application standard, réseau 230 / 415 V, démarreur dans la ligne

Moteur		Démarreur 230 / 415 V (+ 10 % - 15 %) - 50 / 60 Hz		
Puissance plaquée moteur		Courant max permanent en classe 10	Calibre ICL	Référence démarreur
230 V	400 V			
kW	**kW**	**A**	**A**	
4	7,5	17	17	ATS 48D17Q
5,5	11	22	22	ATS 48D22Q
7,5	15	32	32	ATS 48D32Q
9	18,5	38	38	ATS 48D38Q
11	22	47	47	ATS 48D47Q
15	30	62	62	ATS 48D62Q
18,5	37	75	75	ATS 48D75Q
22	45	88	88	ATS 48D88Q
30	55	110	110	ATS 48C11Q
37	75	140	140	ATS 48C14Q
45	90	170	170	ATS 48C17Q
55	110	210	210	ATS 48C21Q
75	132	250	250	ATS 48C25Q
90	160	320	320	ATS 48C32Q
110	220	410	410	ATS 48C41Q
132	250	480	480	ATS 48C48Q
160	315	590	590	ATS 48C59Q
(1)	355	660	660	ATS 48C66Q
220	400	790	790	ATS 48C79Q
250	500	1000	1000	ATS 48M10Q
355	630	1200	1200	ATS 48M12Q

Le courant nominal moteur In ne doit pas dépasser le courant max permanent en classe 10.
(1) Valeur non indiquée lorsqu'il n'existe pas de moteur normalisé correspondant.

Déclassement en température

Le tableau ci dessus tient compte d'une utilisation à une température ambiante de 40 °C maxi.
L'ATS 48 peut être utilisé jusqu'à une température ambiante de 60 °C à condition d'appliquer au courant max permanent en classe 10 un déclassement de 2 % par degré au dessus de 40 °C.
exemple : ATS 48D32Q à 50 °C déclassement de 10 x 2 % = 20 %, 32 A passe à 32 x 0,8 = 25,6 A (courant nominal moteur maxi).

Application sévère, réseau 230 / 415 V, démarreur dans la ligne

Moteur		Démarreur 230 / 415 V (+ 10 % - 15 %) - 50 / 60 Hz		
Puissance plaquée moteur		Courant max permanent en classe 20	Calibre ICL	Référence démarreur
230 V	400 V			
kW	**kW**	**A**	**A**	
3	5,5	12	17	ATS 48D17Q
4	7,5	17	22	ATS 48D22Q
5,5	11	22	32	ATS 48D32Q
7,5	15	32	38	ATS 48D38Q
9	18,5	38	47	ATS 48D47Q
11	22	47	62	ATS 48D62Q
15	30	62	75	ATS 48D75Q
18,5	37	75	88	ATS 48D88Q
22	45	88	110	ATS 48C11Q
30	55	110	140	ATS 48C14Q
37	75	140	170	ATS 48C17Q
45	90	170	210	ATS 48C21Q
55	110	210	250	ATS 48C25Q
75	132	250	320	ATS 48C32Q
90	160	320	410	ATS 48C41Q
110	220	410	480	ATS 48C48Q
132	250	480	590	ATS 48C59Q
160	315	590	660	ATS 48C66Q
(1)	355	660	790	ATS 48C79Q
220	400	790	1000	ATS 48M10Q
250	500	1000	1200	ATS 48M12Q

Le courant nominal moteur In ne doit pas dépasser le courant max permanent en classe 20.
(1) Valeur non indiquée lorsqu'il n'existe pas de moteur normalisé correspondant.

Déclassement en température

Le tableau ci dessus tient compte d'une utilisation à une température ambiante de 40 °C maxi.
L'ATS 48 peut être utilisé jusqu'à une température ambiante de 60 °C à condition d'appliquer au courant max permanent en classe 20 un déclassement de 2 % par degré au dessus de 40 °C.
exemple : ATS 48D32Q à 50 °C déclassement de 10 x 2 % = 20 %, 22 A passe à 22 x 0,8 = 17,6 A (courant nominal moteur maxi).

Application standard, réseau 230 / 415 V, démarreur dans le triangle

Moteur		Démarreur 230 / 415 V (+ 10 % - 15 %) - 50 / 60 Hz		
Puissance plaquée moteur		Courant max permanent en classe 10	Calibre ICL	Référence démarreur
230 V	400 V			
kW	**kW**	**A**	**A**	
7,5	15	29	29	ATS 48D17Q
9	18,5	38	38	ATS 48D22Q
15	22	55	55	ATS 48D32Q
18,5	30	66	66	ATS 48D38Q
22	45	81	81	ATS 48D47Q
30	55	107	107	ATS 48D62Q
37	55	130	130	ATS 48D75Q
45	75	152	152	ATS 48D88Q
55	90	191	191	ATS 48C11Q
75	110	242	242	ATS 48C14Q
90	132	294	294	ATS 48C17Q
110	160	364	364	ATS 48C21Q
132	220	433	433	ATS 48C25Q
160	250	554	554	ATS 48C32Q
220	315	710	710	ATS 48C41Q
250	355	831	831	ATS 48C48Q
(1)	400	1022	1022	ATS 48C59Q
315	500	1143	1143	ATS 48C66Q
355	630	1368	1368	ATS 48C79Q
(1)	710	1732	1732	ATS 48M10Q
500	(1)	2078	2078	ATS 48M12Q

Le courant nominal moteur In ne doit pas dépasser le courant max permanent en classe 10.
(1) Valeur non indiquée lorsqu'il n'existe pas de moteur normalisé correspondant.

Déclassement en température

Le tableau ci dessus tient compte d'une utilisation à une température ambiante de 40 °C maxi.
L'ATS 48 peut être utilisé jusqu'à une température ambiante de 60 °C à condition d'appliquer au courant max permanent en classe 10 un déclassement de 2 % par degré au dessus de 40 °C.
exemple : ATS 48D32Q à 50 °C déclassement de 10 x 2 % = 20 %, 55 A passe à 55 x 0,8 = 44 A (courant nominal moteur maxi).

Application sévère, réseau 230 / 415 V, démarreur dans le triangle

Moteur		Démarreur 230 / 415 V (+ 10 % - 15 %) - 50 / 60 Hz		
Puissance plaquée moteur		Courant max permanent en classe 20	Calibre ICL	Référence démarreur
230 V	400 V			
kW	**kW**	**A**	**A**	
5,5	11	22	29	ATS 48D17Q
7,5	15	29	38	ATS 48D22Q
9	18,5	38	55	ATS 48D32Q
15	22	55	66	ATS 48D38Q
18,5	30	66	81	ATS 48D47Q
22	45	81	107	ATS 48D62Q
30	55	107	130	ATS 48D75Q
37	55	130	152	ATS 48D88Q
45	75	152	191	ATS 48C11Q
55	90	191	242	ATS 48C14Q
75	110	242	294	ATS 48C17Q
90	132	294	364	ATS 48C21Q
110	160	364	433	ATS 48C25Q
132	220	433	554	ATS 48C32Q
160	250	554	710	ATS 48C41Q
220	315	710	831	ATS 48C48Q
250	355	831	1022	ATS 48C59Q
(1)	400	1022	1143	ATS 48C66Q
315	500	1143	1368	ATS 48C79Q
355	630	1368	1732	ATS 48M10Q
(1)	710	1732	2078	ATS 48M12Q

Le courant nominal moteur In ne doit pas dépasser le courant max permanent en classe 20.
(1) Valeur non indiquée lorsqu'il n'existe pas de moteur normalisé correspondant.

Déclassement en température

Le tableau ci dessus tient compte d'une utilisation à une température ambiante de 40 °C maxi.
L'ATS 48 peut être utilisé jusqu'à une température ambiante de 60 °C à condition d'appliquer au courant max permanent en classe 20 un déclassement de 2 % par degré au dessus de 40 °C.
exemple : ATS 48D32Q à 50 °C déclassement de 10 x 2 % = 20 %, 38 A passe à 38 x 0,8 = 30,4 A (courant nominal moteur maxi).

Application standard, réseau 208 / 690 V, démarreur dans la ligne

Moteur							Démarreur 208 / 690 V (+ 10 % - 15 %) - 50 / 60 Hz		
Puissance plaquée moteur							Courant max permanent en classe 10	Calibre ICL	Référence démarreur
208 V	230 V	440 V	460 V	500 V	575 V	690 V			
HP	**HP**	**kW**	**HP**	**kW**	**HP**	**kW**	**A**	**A**	
3	5	7,5	10	9	15	15	17	17	ATS 48D17Y
5	7,5	11	15	11	20	18,5	22	22	ATS 48D22Y
7,5	10	15	20	18,5	25	22	32	32	ATS 48D32Y
10	(1)	18,5	25	22	30	30	38	38	ATS 48D38Y
(1)	15	22	30	30	40	37	47	47	ATS 48D47Y
15	20	30	40	37	50	45	62	62	ATS 48D62Y
20	25	37	50	45	60	55	75	75	ATS 48D75Y
25	30	45	60	55	75	75	88	88	ATS 48D88Y
30	40	55	75	75	100	90	110	110	ATS 48C11Y
40	50	75	100	90	125	110	140	140	ATS 48C14Y
50	60	90	125	110	150	160	170	170	ATS 48C17Y
60	75	110	150	132	200	200	210	210	ATS 48C21Y
75	100	132	200	160	250	250	250	250	ATS 48C25Y
100	125	160	250	220	300	315	320	320	ATS 48C32Y
125	150	220	300	250	350	400	410	410	ATS 48C41Y
150	(1)	250	350	315	400	500	480	480	ATS 48C48Y
(1)	200	355	400	400	500	560	590	590	ATS 48C59Y
200	250	400	500	(1)	600	630	660	660	ATS 48C66Y
250	300	500	600	500	800	710	790	790	ATS 48C79Y
350	350	630	800	630	1000	900	1000	1000	ATS 48M10Y
400	450	710	1000	800	1200	(1)	1200	1200	ATS 48M12Y

Le courant nominal moteur In ne doit pas dépasser le courant max permanent en classe 10.
(1) Valeur non indiquée lorsqu'il n'existe pas de moteur normalisé correspondant.

Déclassement en température

Le tableau ci dessus tient compte d'une utilisation à une température ambiante de 40 °C maxi.
L'ATS 48 peut être utilisé jusqu'à une température ambiante de 60 °C à condition d'appliquer au courant max permanent en classe 10 un déclassement de 2 % par degré au dessus de 40 °C.
exemple : ATS 48D32Y à 50 °C déclassement de 10 x 2 % = 20 %, 32 A passe à 32 x 0,8 = 25,6 A (courant nominal moteur maxi).

Application sévère, réseau 208 / 690 V, démarreur dans la ligne

Moteur							Démarreur 208 / 690 V (+ 10 % - 15 %) - 50 / 60 Hz		
Puissance plaquée moteur							Courant max permanent en classe 20	Calibre ICL	Référence démarreur
208 V	230 V	440 V	460 V	500 V	575 V	690 V			
HP	**HP**	**kW**	**HP**	**kW**	**HP**	**kW**	**A**	**A**	
2	3	5,5	7,5	7,5	10	11	12	17	ATS 48D17Y
3	5	7,5	10	9	15	15	17	22	ATS 48D22Y
5	7,5	11	15	11	20	18,5	22	32	ATS 48D32Y
7,5	10	15	20	18,5	25	22	32	38	ATS 48D38Y
10	(1)	18,5	25	22	30	30	38	47	ATS 48D47Y
(1)	15	22	30	30	40	37	47	62	ATS 48D62Y
15	20	30	40	37	50	45	62	75	ATS 48D75Y
20	25	37	50	45	60	55	75	88	ATS 48D88Y
25	30	45	60	55	75	75	88	110	ATS 48C11Y
30	40	55	75	75	100	90	110	140	ATS 48C14Y
40	50	75	100	90	125	110	140	170	ATS 48C17Y
50	60	90	125	110	150	160	170	210	ATS 48C21Y
60	75	110	150	132	200	200	210	250	ATS 48C25Y
75	100	132	200	160	250	250	250	320	ATS 48C32Y
100	125	160	250	220	300	315	320	410	ATS 48C41Y
125	150	220	300	250	350	400	410	480	ATS 48C48Y
150	(1)	250	350	315	400	500	480	590	ATS 48C59Y
(1)	200	355	400	400	500	560	590	660	ATS 48C66Y
200	250	400	500	(1)	600	630	660	790	ATS 48C79Y
250	300	500	600	500	800	710	790	1000	ATS 48M10Y
350	350	630	800	630	1000	900	1000	1200	ATS 48M12Y

Le courant nominal moteur In ne doit pas dépasser le courant max permanent en classe 20.
(1) Valeur non indiquée lorsqu'il n'existe pas de moteur normalisé correspondant.

Déclassement en température

Le tableau ci dessus tient compte d'une utilisation à une température ambiante de 40 °C maxi.
L'ATS 48 peut être utilisé jusqu'à une température ambiante de 60 °C à condition d'appliquer au courant max permanent en classe 20 un déclassement de 2 % par degré au dessus de 40 °C.
exemple : ATS 48D32Y à 50 °C déclassement de 10 x 2 % = 20 %, 22 A passe à 22 x 0,8 = 17,6 A (courant nominal moteur maxi).

Encombrement

ATS 48D17 • …C66 •

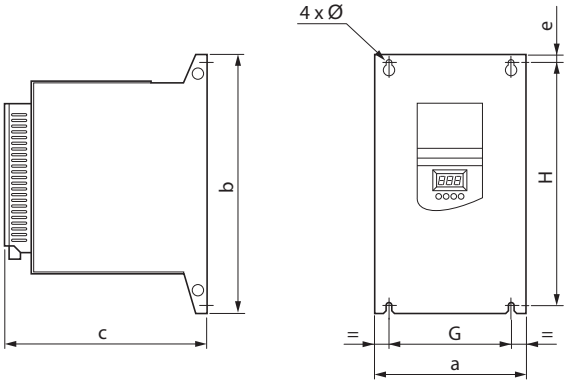

ATS 48	a mm	b mm	c mm	e mm	G mm	H mm	Ø mm	Masse kg
D17Q, D17Y D22Q, D22Y D32Q, D32Y D38Q, D38Y D47Q, D47Y	160	275	190	6,6	100	260	7	4,9
D62Q, D62Y D75Q, D75Y D88Q, D88Y C11Q, C11Y	190	290	235	10	150	270	7	8,3
C14Q, C14Y C17Q, C17Y	200	340	265	10	160	320	7	12,4
C21Q, C21Y C25Q, C25Y C32Q, C32Y	320	380	265	15	250	350	9	18,2
C41Q, C41Y C48Q, C48Y C59Q, C59Y C66Q, C66Y	400	670	300	20	300	610	9	51,4

Encombrement

ATS 48C79 • …M12 •

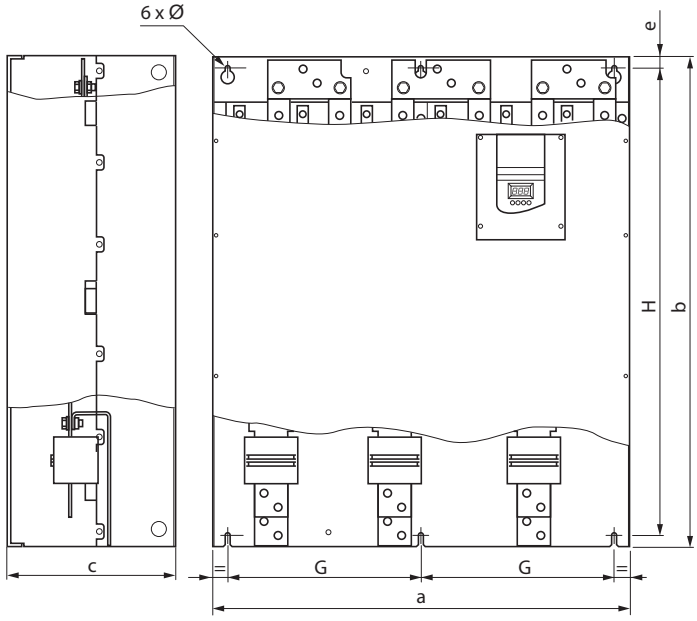

ATS 48	a mm	b mm	c mm	e mm	G mm	H mm	Ø mm	Masse kg
C79Q, C79Y M10Q, M10Y M12Q, M12Y	770	890	315	20	350	850	11	115

Précautions de montage

Installer l'appareil verticalement, à ± 10°.

Eviter de le placer à proximité d'éléments chauffants, en particulier lorsque ceux ci sont en dessous.

Respecter un espace libre suffisant pour assurer la circulation de l'air nécessaire au refroidissement, qui se fait par ventilation du bas vers le haut.

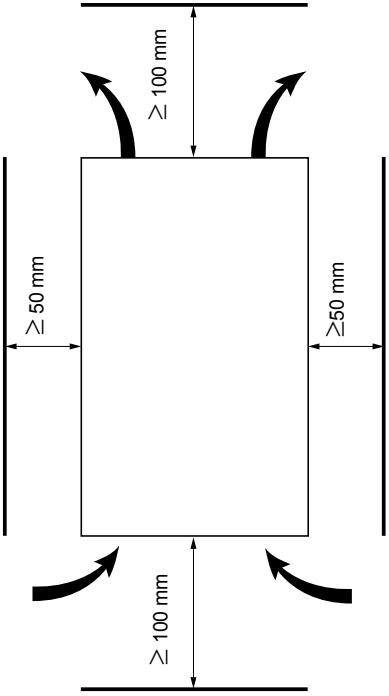

Veiller à ce qu'aucun liquide, poussière ou objet conducteur ne tombe dans le démarreur (degré de protection IP00 par le dessus)

Ventilation du démarreur

Sur les calibres munis d'un ventilateur de refroidissement celui ci est alimenté automatiquement dès que la température du radiateur atteint 50 °C. Il est mis hors tension lorsque la température redescend à 40 °C.

Débit des ventilateurs :

ATS 48 D32 • et D38 • : 14 m^3/heure
ATS 48 D47 • : 28 m^3/heure
ATS 48 D62 • à C11 • : 86 m^3/heure
ATS 48 C14 • et C17 • : 138 m^3/heure
ATS 48 C21 • à C32 • : 280 m^3/heure
ATS 48 C41 • à C66 • : 600 m^3/heure
ATS 48 C79 • à M12 • : 1200 m^3/heure

Montage en coffret ou armoire

Coffret ou armoire métallique de degré de protection IP23

Respecter les précautions de montage indiquées à la page précédente.

Afin d'assurer une bonne circulation d'air dans le démarreurþ:

- prévoir des ouïes de ventilation,
- s'assurer que la ventilation est suffisante, sinon installer une ventilation forcée, avec filtre si nécessaire.

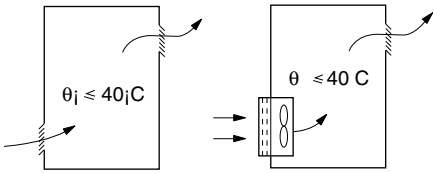

Puissance dissipée par les démarreurs, non court-circuités, à leur courant nominal

Référence démarreur ATS 48	Puissance en W	Référence démarreur ATS 48	Puissance en W
D17Q, D17Y	59	C21Q, C21Y	580
D22Q, D22Y	74	C25Q, C25Y	695
D32Q, D32Y	104	C32Q, C32Y	902
D38Q, D38Y	116	C41Q, C41Y	1339
D47Q, D47Y	142	C48Q, C48Y	1386
D62Q, D62Y	201	C59Q, C59Y	1731
D75Q, D75Y	245	C66Q, C66Y	1958
D88Q, D88Y	290	C79Q, C79Y	2537
C11Q, C11Y	322	M10Q, M10Y	2865
C14Q, C14Y	391	M12Q, M12Y	3497
C17Q, C17Y	479		

Nota : Lorsque les démarreurs sont court-circuités, leur puissance dissipée est négligeable (entre 15 et 30 W).

- Consommation contrôle (tous calibres): 25 W sans ventilateurs
- Consommation contrôle avec ventilateurs en fonctionnement :

Démarreurs	Puissances actives (W)	Puissance apparente (VA)
ATS 48D17● to C17●	30	80
ATS 48C21● to C32●	50	130
ATS 48C41● to M12●	80	240

Borniers puissance

Bornes	Fonctions	Capacité maximale de raccordement Couple de serrage des bornes					
		ATS 48 D17 • D22 • D32 • D38 • D47 •	ATS 48 D62 • D75 • D88 • C11 •	ATS 48 C14 • C17 •	ATS 48 C21 • C25 • C32 •	ATS 48 C41 • C48 • C59 • C66 •	ATS 48 C79 • M10 • M12 •
⏚	Prises de terre reliées à la terre	10 mm^2 1,7 N.m	16 mm^2 3 N.m	120 mm^2 27 N.m	120 mm^2 27 N.m	240 mm^2 27 N.m	2x240 mm^2 27 N.m
		8 AWG 15 lb.in	4 AWG 26 lb.in	Bus Bar 238 lb.in	Bus Bar 238 lb.in	Bus Bar 238 lb.in	Bus Bar 238 lb.in
1/L1 3/L2 5/L3	Alimentation puissance	16 mm^2 3 N.m	50 mm^2 10 N.m	95 mm^2 34 N.m	240 mm^2 34 N.m	2x240 mm^2 57 N.m	4x240 mm^2 57 N.m
		8 AWG 26 lb.in	2/0 AWG 88 lb.in	2/0 AWG 300 lb.in	Bus Bar 300 lb.in	Bus Bar 500 lb.in	Bus Bar 500 lb.in
2/T1 4/T2 6/T3	Sorties vers le moteur	16 mm^2 3 N.m	50 mm^2 10 N.m	95 mm^2 34 N.m	240 mm^2 34 N.m	2x240 mm^2 57 N.m	4x240 mm^2 57 N.m
		8 AWG 26 lb.in	2/0 AWG 88 lb.in	2/0 AWG 300 lb.in	Bus Bar 300 lb.in	Bus Bar 500 lb.in	Bus Bar 500 lb.in
A2 B2 C2	Court-circuitage démarreur	16 mm^2 3 N.m	50 mm^2 10 N.m	95 mm^2 34 N.m	240 mm^2 34 N.m	2x240 mm^2 57 N.m	4x240 mm^2 57 N.m
		8 AWG 26 lb.in	2/0 AWG 88 lb.in	2/0 AWG 300 lb.in	Bus Bar 300 lb.in	Bus Bar 500 lb.in	Bus Bar 500 lb.in

Disposition des bornes puissance, ATS 48D17 • à C11 •

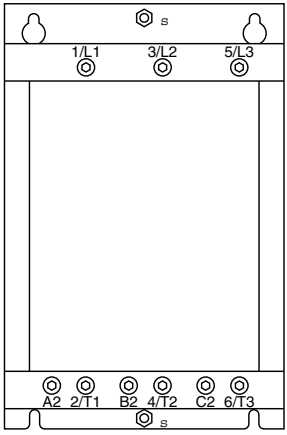

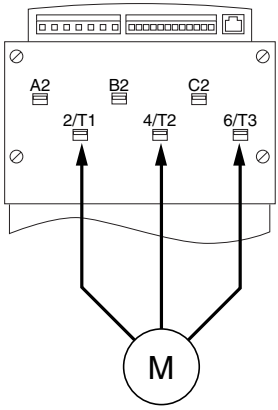

Moteur à raccorder en 2/T1, 4/T2, 6/T3

Disposition des bornes puissance, ATS 48C14 • et C17 •

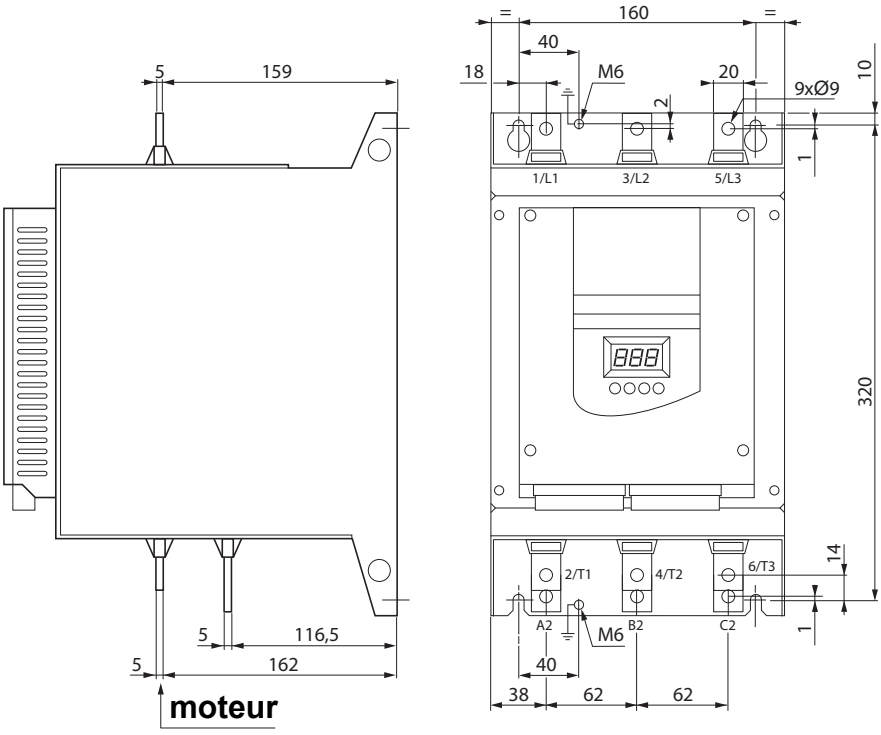

Disposition des bornes puissance, ATS 48C21 • à C32 •

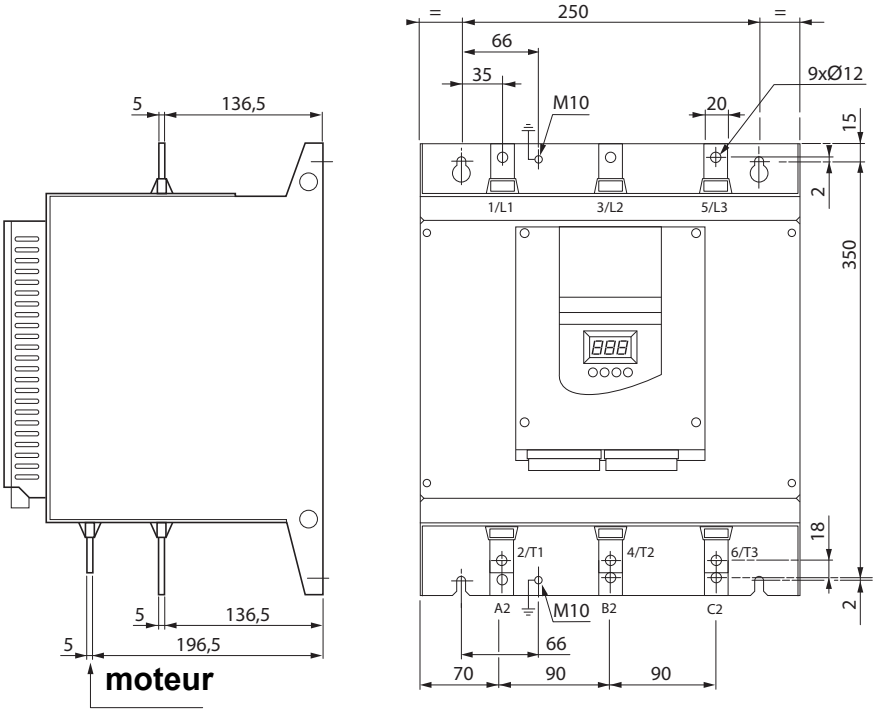

Borniers puissance

Disposition des bornes puissance, ATS 48C41 • à C66 •

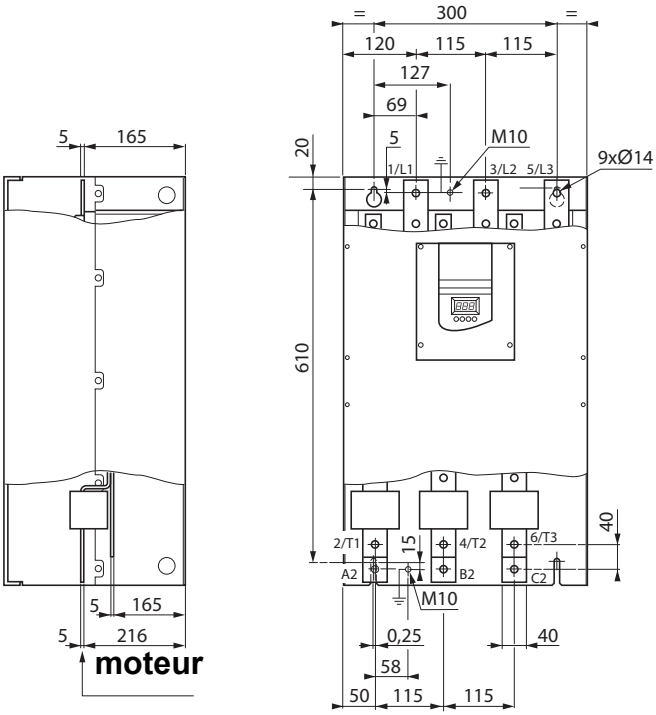

Borniers puissance

Disposition des bornes puissance, ATS 48C79 • à M12 •

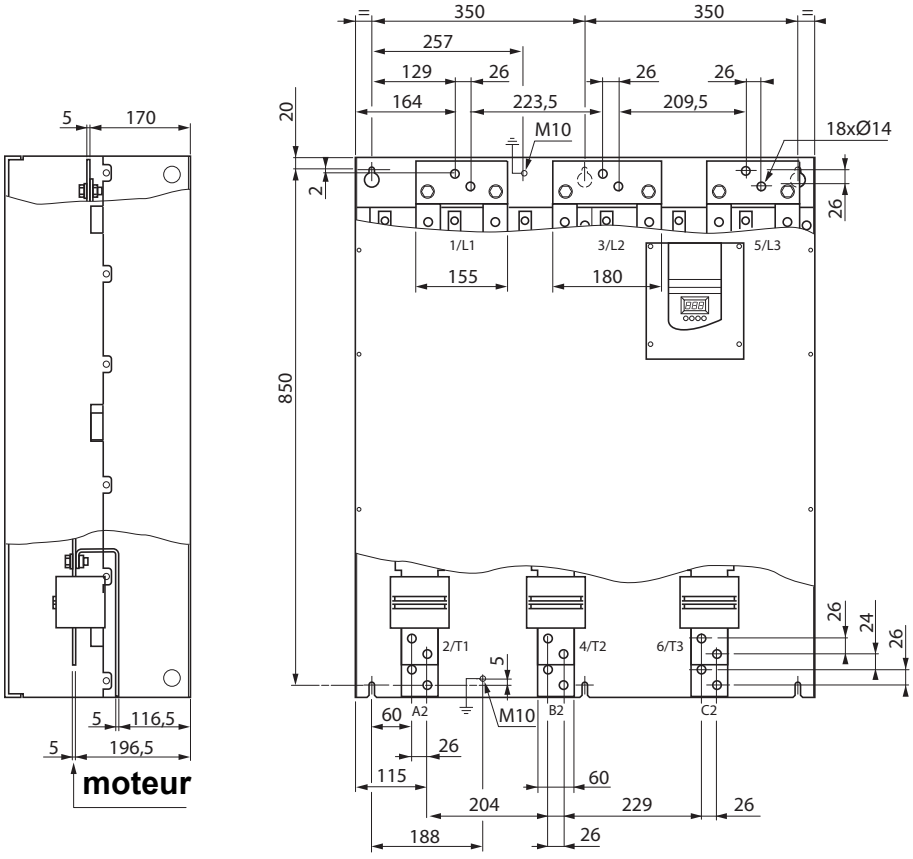

Borniers contrôle

Les borniers contrôle sont munis de connecteurs débrochables avec détrompeur.

Capacité maximale de raccordement : 2,5 mm2 (12 AWG)
Couple de serrage maximal : 0,4 N.m (3,5 lb.in)

Pour les démarreurs ATS 48C17 • à M12 •, l'accès aux borniers contrôle nécessite de retirer le capot de protection.

Caractéristiques électriques

Bornes	Fonction	Caractéristiques
CL1 CL2	Alimentation du contrôle de l'Altistart	ATS 48 • • • Q : 220 à 415 V + 10% - 15%, 50 / 60 Hz ATS 48 • • • Y : 110 à 230 V + 10% - 15%, 50 / 60 Hz Consommation page 23.
R1A R1C	Contact à fermeture (NO) du relais programmable r1	Pouvoir de commutation mini : • 10 mA pour 6 V ∿ Pouvoir de commutation maxi sur charge inductive (cos φ = 0,5 et L/R = 20 ms) : • 1,8 A pour 230 V c et 30 V ∿ Tension max 400 V
R2A R2C	Contact à fermeture (NO) du relais de fin de démarrage r2	
R3A R3C	Contact à fermeture (NO) du relais programmable r3	
STOP RUN LI3 LI4	Arrêt démarreur (état 0 = arrêt) Marche démarreur (état 1 = marche si STOP à l'état 1) Entrée programmable Entrée programmable	4 entrées logiques 24 V d'impédance 4,3 kΩ Umax = 30 V, Imax = 8 mA état 1 : U > 11 V - I > 5 mA état 0 : U < 5 V - I < 2 mA
24V	Alimentation des entrées logiques	+ 24V ± 25% isolée et protégée contre les courts-circuits et surcharge; débit maximal : 200 mA
LO+	Alimentation des sorties logiques	A raccorder au 24 V ou à une source externe
LO1 LO2	Sorties logiques programmables	2 sorties à collecteur ouvert, compatibles automate niveau 1, norme IEC 65A-68 • Alimentation +24 V (mini 12 V maxi 30 V) • Courant maxi 200 mA par sortie avec une source externe
AO1	Sortie analogique programmable	Sortie configurable en 0 - 20 mA ou 4 - 20 mA • précision ± 5 % de la valeur maxi, impédance de charge maxi 500 Ω
COM	Commun des entrées / sorties	0 V
PTC1 PTC2	Entrée pour sondes PTC	Résistance totale du circuit sonde 750 Ω à 25 °C (3 sondes de 250 Ω en série par exemple)
(RJ 45)	Prise pour • terminal déporté • Power Suite • Bus de communication	RS 485 Modbus

Disposition des bornes contrôle

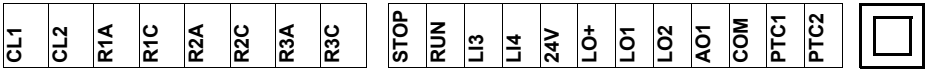

(RJ 45)

Précautions de câblage

Puissance

Respecter les sections des câbles préconisées par les normes.

Le démarreur doit être impérativement raccordé à la terre, afin d'être en conformité avec les réglementations portant sur les courants de fuite. Lorsqu'une protection amont par "dispositif différentiel résiduel" est imposée par les normes d'installation il est nécessaire d'utiliser un dispositif de type A-Si (évite les déclenchements intempestifs à la mise sous tension). Vérifier la compatibilité avec les autres appareils de protection. Si l'installation comporte plusieurs démarreurs sur la même ligne, raccorder séparément chaque démarreur à la terre. Si nécessaire, prévoir une inductance de ligne (consulter le catalogue).

Séparer les câbles de puissance des circuits à signaux bas niveau de l'installation (détecteurs, automates programmables, appareils de mesure, vidéo, téléphone).

Commande

Séparer les circuits de commande et les câbles de puissance.

Fonctions des entrées logiques RUN et STOP (Voir schéma d'application page 32)

Commande 2 fils

La marche et l'arrêt sont commandés par l'état 1þ(marche) ou 0 (arrêt), qui est pris en compte sur les entrées RUN et STOP en même temps.

Lors d'une mise sous tension ou d'une remise à zéro de défaut manuelle le moteur redémarre si l'ordre RUN est présent.

Commande 3 fils

La marche et l'arrêt sont commandés par 2 entrées logiques différentes.
L'arrêt est obtenu à l'ouverture (état 0) de l'entrée STOP.
L'impulsion sur l'entrée RUN est mémorisée jusqu'à ouverture de l'entrée STOP.

Lors d'une mise sous tension ou d'une remise à zéro de défaut manuelle ou après une commande d'arrêt, le moteur ne peut être alimenté qu'après une ouverture préalable (état 0) puis une nouvelle impulsion (état 1) de l'entrée RUN.

ATS 48 : 1 sens de marche avec contacteur de ligne, arrêt en roue libre, coordination type 1

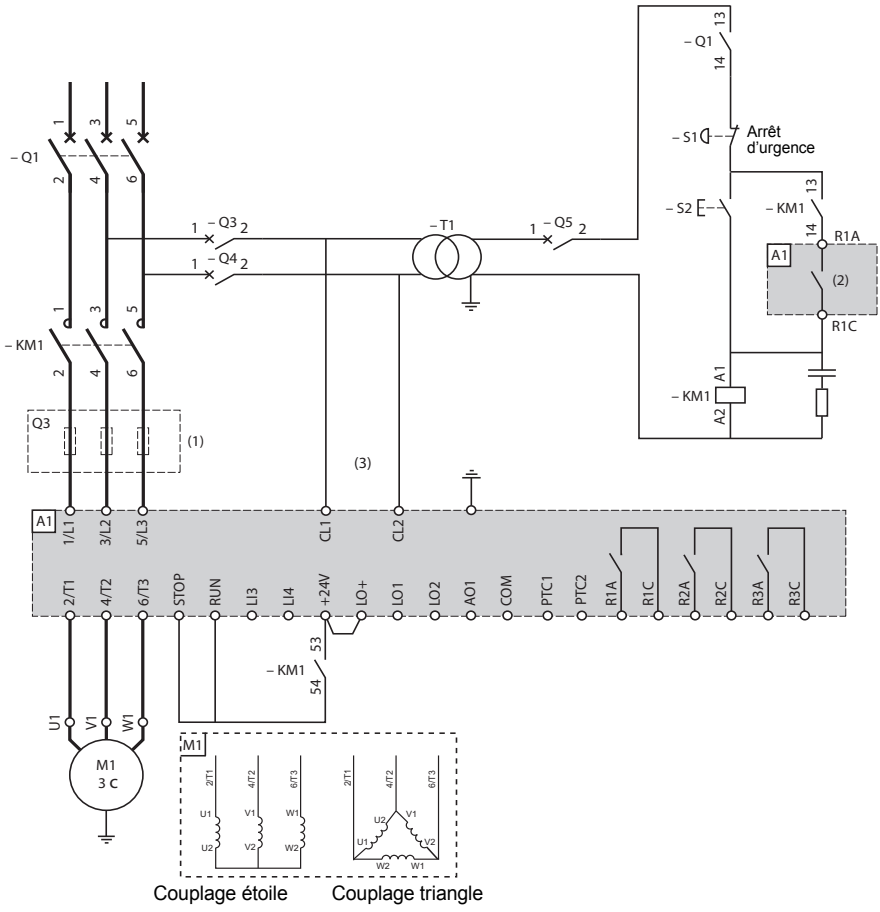

(1)Mise en place de fusibles ultra rapides dans le cas de la coordination type 2 (selon IEC 60 947-4-2).

(2)Affectation du relais R1 : relais d'isolement (r1l). Voir "Caractéristiques électriques", page 29. Attention aux limites d'emploi du contact, relayer pour les contacteurs de fort calibre.

(3)Insérer un transformateur lorsque la tension du réseau est différente de celle admissible par le contrôle de l'ATS 48. Voir "Caractéristiques électriques", page 29.

Schéma d'application

ATS 48 : 1 sens de marche avec contacteur de ligne, court-circuitage, arrêt libre ou contrôlé, coordination type 1

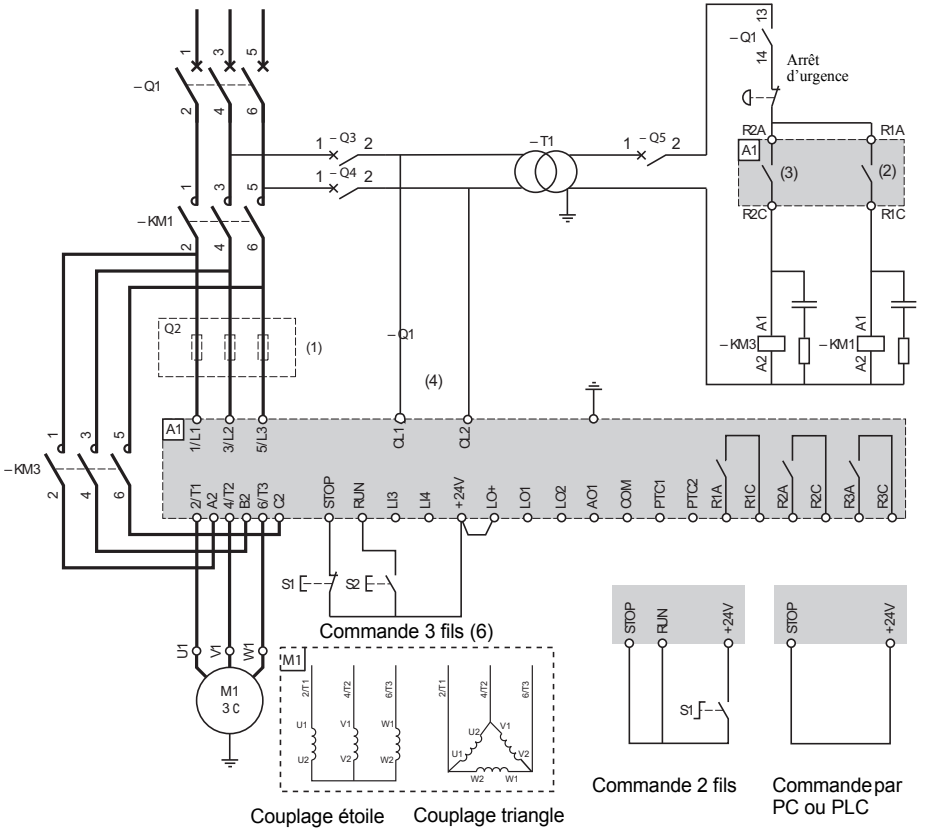

(1) Mise en place de fusibles ultra rapides dans le cas de la coordination type 2 (selon IEC 60 947-4-2).
(2) Affectation du relais R1 : relais d'isolement (r1I). Attention aux limites d'emploi du contact, relayer pour les contacteurs de fort calibre. Voir "Caractéristiques électriques", page 29.
(3) Attention aux limites d'emploi du contact, relayer pour les contacteurs de fort calibre. Voir "Caractéristiques électriques", page 29.
(4) Insérer un transformateur lorsque la tension du réseau est différente de celle admissible par le contrôle de l'ATS 48. Voir "Caractéristiques électriques", page 29.
(5)Voir "Commande 2 fils", page 30.
(6)Voir "Commande 3 fils", page 30.

ATS 48 : 1 sens de marche, arrêt libre, coordination type 1, avec contacteur de ligne, court-circuitage, couplage dans le triangle du moteur, ATS 48•••Q ou ATS 48•••YS316.

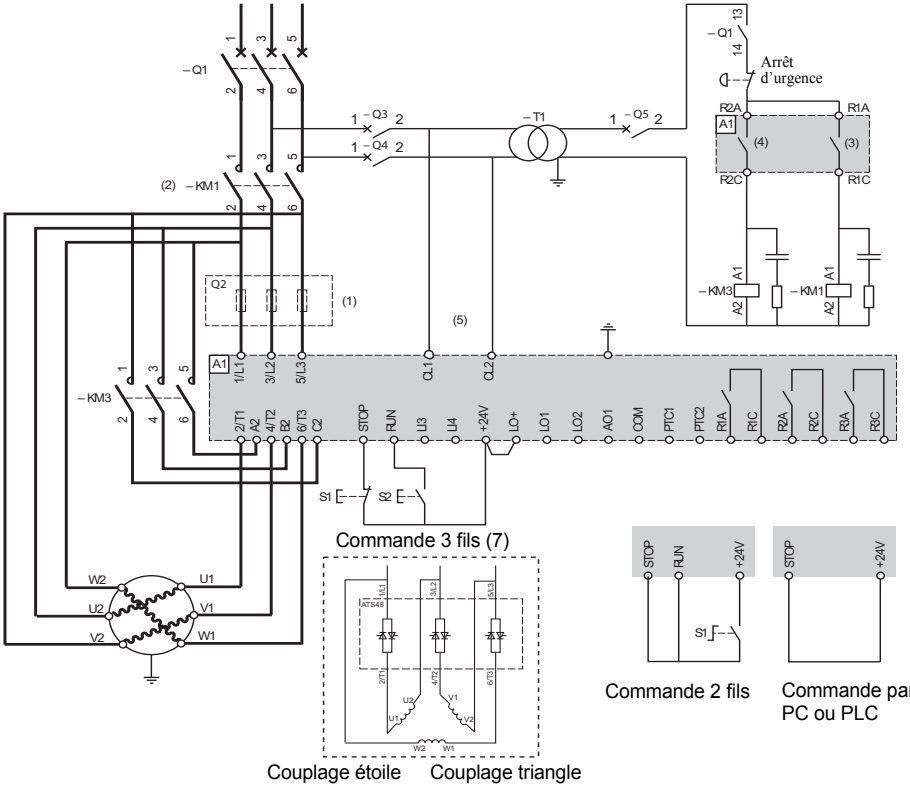

Nota: Régler dLt sur on (voir “Menu Réglages avancés drC”, page 58)

(1)Mise en place de fusibles ultra rapides dans le cas de la coordination type 2 (selon IEC 60 947-4-2).

(2)Utilisation de KM1 obligatoire. Prévoir une protection thermique différentielle externe type Vigirex pour Compact NS80, bloc Vigi pour Compact NS400 à 630, consulter le catalogue Merlin Gérin pour les calibres supérieurs.

(3)Affectation du relais R1 : relais d'isolement (r1I). Attention aux limites d'emploi du contact, relayer pour les contacteurs de fort calibre. Voir “Caractéristiques électriques”, page 29.

(4)Attention aux limites d'emploi du contact, relayer pour les contacteurs de fort calibre. Voir “Caractéristiques électriques”, page 29.

(5)Insérer un transformateur lorsque la tension du réseau est différente de celle admissible par le contrôle de l'ATS 48. Voir “Caractéristiques électriques”, page 29.

(6)Voir “Commande 2 fils”, page 30.

(7)Voir “Commande 3 fils”, page 30.

(8)Inductances de ligne éventuelles

Lorsque le contacteur de court-circuitage est utilisé, la détection du défaut "PHF" peut-être allongée.

ATS 48 : 1 sens de marche, arrêt libre ou contrôlé, contacteur de ligne, court-circuitage moteur, PV/GV avec deux jeux de paramètres

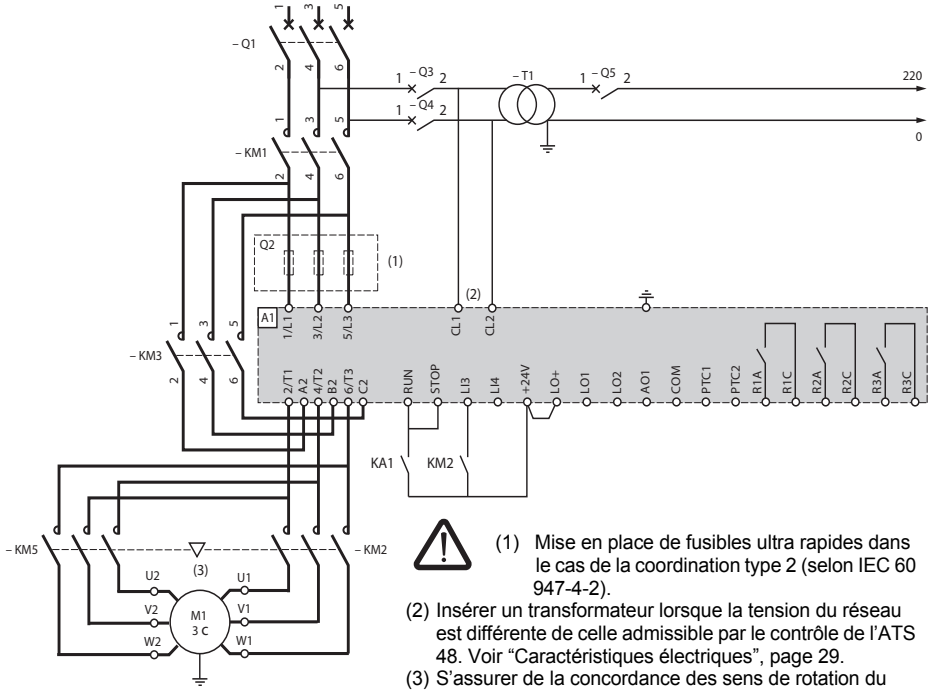

(1) Mise en place de fusibles ultra rapides dans le cas de la coordination type 2 (selon IEC 60 947-4-2).

(2) Insérer un transformateur lorsque la tension du réseau est différente de celle admissible par le contrôle de l'ATS 48. Voir "Caractéristiques électriques", page 29.

(3) S'assurer de la concordance des sens de rotation du moteur pour les 2 vitesses.

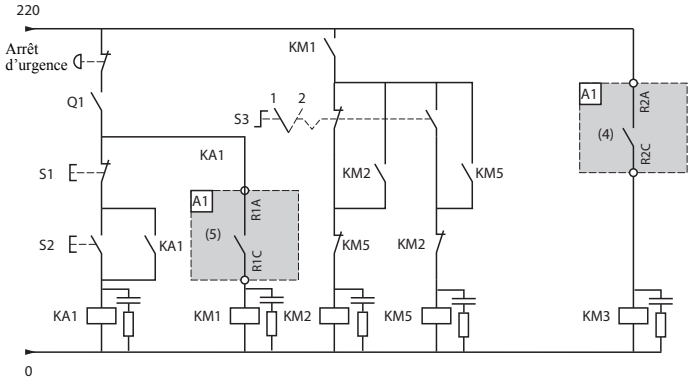

(4) Attention aux limites d'emploi du contact, relayer pour les contacteurs de fort calibre. Voir "Caractéristiques électriques", page 29.

(5) Affectation du relais R1 : relais d'isolement (r1I). Attention aux limites d'emploi du contact, relayer pour les contacteurs de fort calibre. Voir "Caractéristiques électriques", page 29.
LI3 = LIS (second jeu de paramètres moteur)
S3 : 1 = PV, 2 = GV

ATS 48 : 1 sens de marche avec contacteur de ligne, démarrage et ralentissement de plusieurs moteurs en cascade avec un seul Altistart

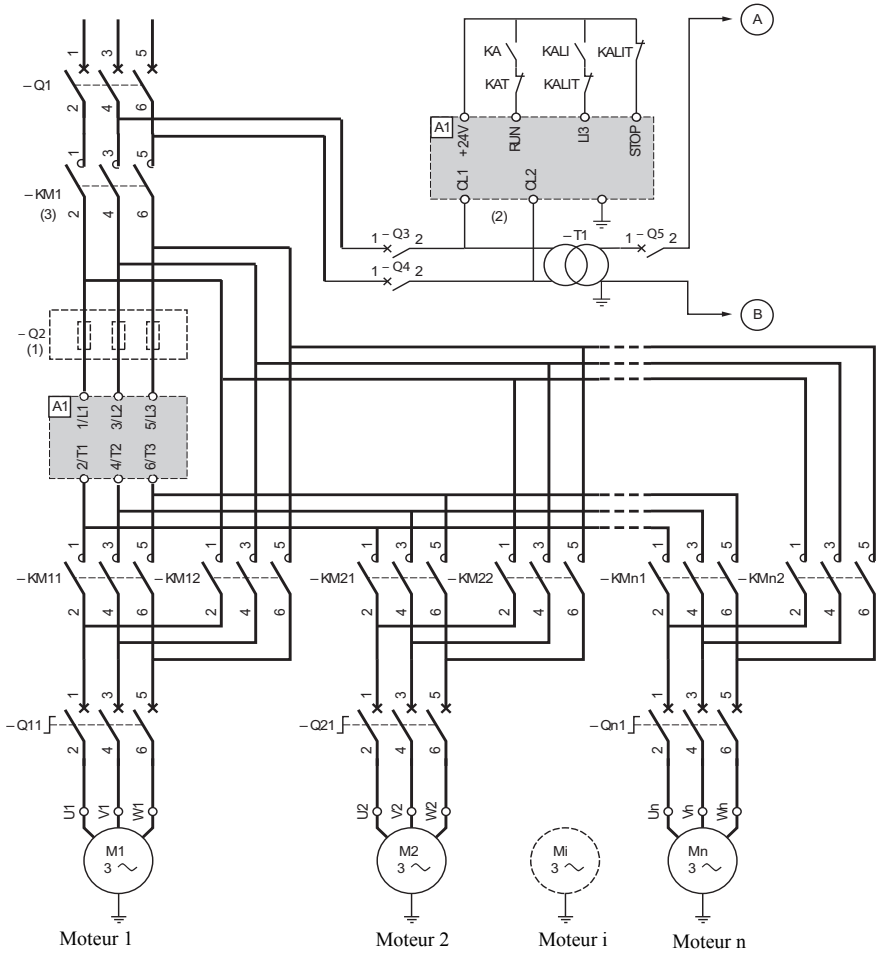

(1) Mise en place de fusibles dans le cas de la coordination type 2 (selon IEC 60 947-4-2).
(2) Insérer un transformateur lorsque la tension du réseau est différente de celle admissible par le contrôle de l'ATS 48. Voir "Caractéristiques électriques", page 29.
(3) KM1 : à dimensionner en fonction de la puissance totale des moteurs.

Important :

- Il faut configurer une entrée logique de l'ATS48 "en cascade" (LI3 = LIC). Voir "Activation de la fonction cascade", page 60.
- En cas de défaut il n'est pas possible de décélérer ou de freiner les moteurs alors en service.
- Ajuster la protection thermique de chaque disjoncteur Qn1 au courant nominal moteur.

Schéma d'application

ATS 48 : 1 sens de marche avec contacteur de ligne, démarrage et ralentissement de plusieurs moteurs en cascade avec un seul Altistart.

Commande moteur 1

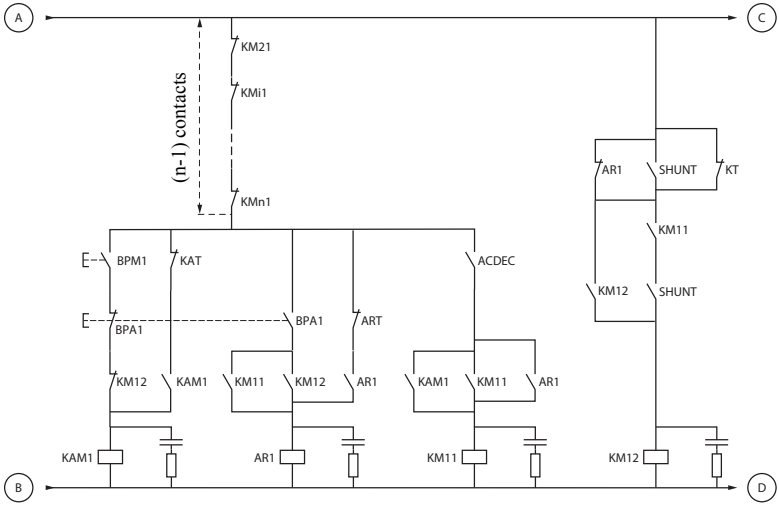

Commande moteur 2

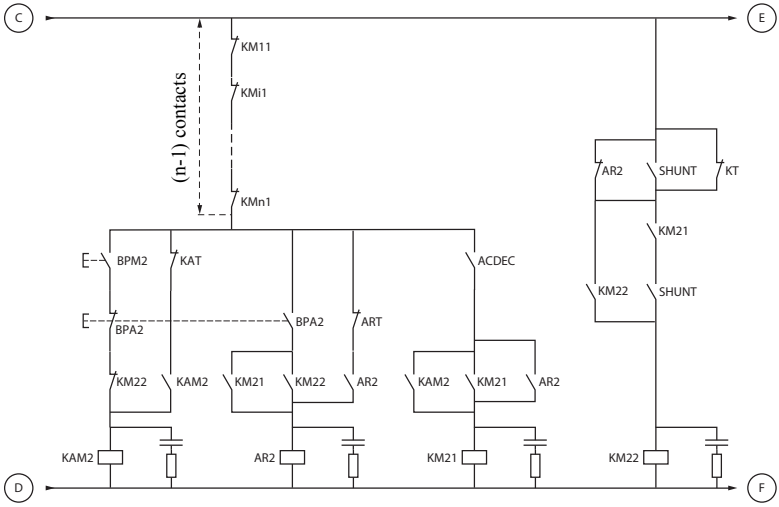

BPM1 : Bouton "Marche" moteur 1
BPM2 : Bouton "Marche" moteur 2

BPA1 : Bouton "Arrêt" moteur 1
BPA2 : Bouton "Arrêt" moteur 2

Schéma d'application

ATS 48 : 1 sens de marche avec contacteur de ligne, démarrage et ralentissement de plusieurs moteurs en cascade avec un seul Altistart.

Commande moteur n

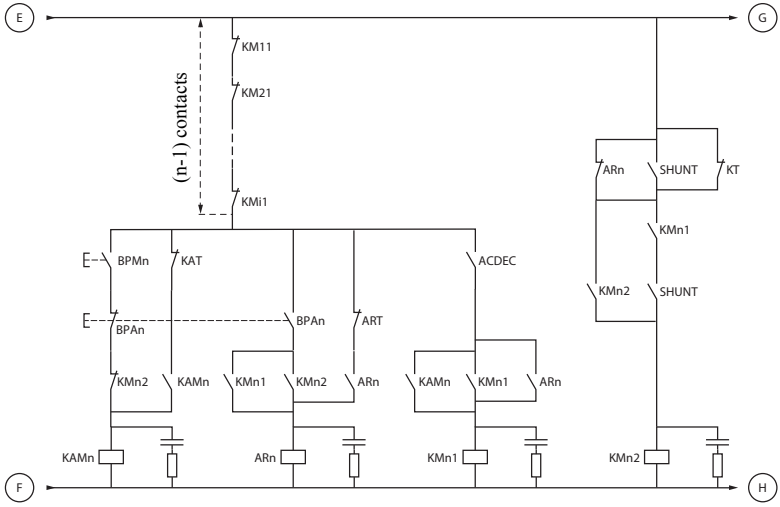

Commande cascade

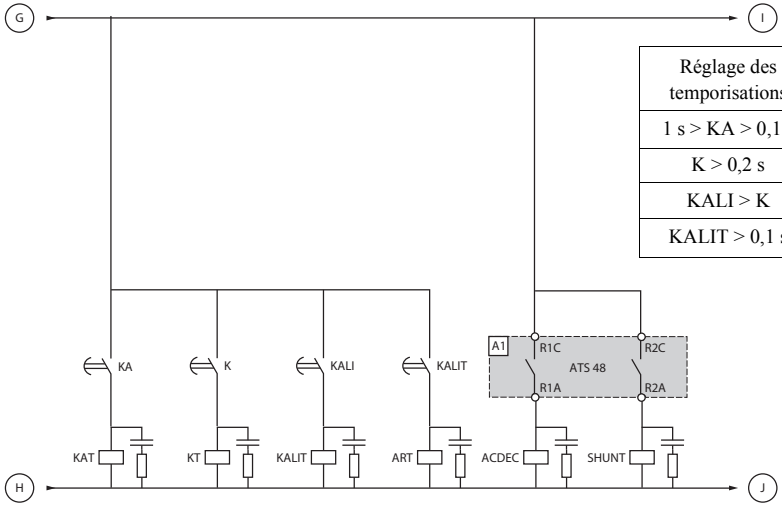

Réglage des temporisations
1 s > KA > 0,1 s
K > 0,2 s
KALI > K
KALIT > 0,1 s

BPMn : Bouton "Marche" moteur n
BPAn : Bouton "Arrêt" moteur n

R1 doit être configuré en relais d'isolement (r1 = r1I)

Entre deux demandes d'arrêt consécutives, attendre la fin de la temporisation KALIT

ATS 48 : 1 sens de marche avec contacteur de ligne, démarrage et ralentissement de plusieurs moteurs en cascade avec un seul Altistart.

Commande cascade

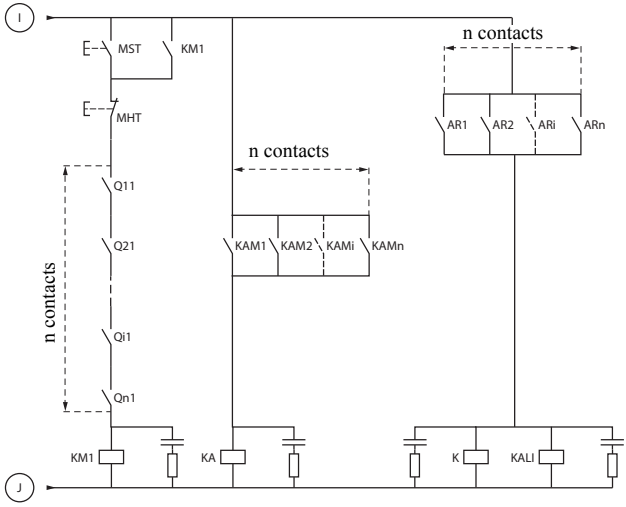

MST : Bouton "Marche" général
MHT : Bouton "Arrêt" général.

Schéma d'application

ATS 48 : 1 sens de marche avec contacteur de ligne, démarrage et ralentissement de plusieurs moteurs en cascade avec un seul Altistart.

Explication de la séquence complète.

Démarrer avec MST pour faire monter KM1 (contacteur de ligne)

1 - 2 - 3

Presser BPM1 pour démarrer le moteur 1. Pour démarrer le moteur 2 presser BPM2, presser BPMn pour démarrer le moteur n.
Quand BPM1 est actionné, KAM1 monte, KM11 aussi parce que ACDEC est monté (l'ATS48 est sous tension avec MST et KM1).
KA monte parce que KAM1 est fermé. Après un temps ajustable KAT monte aussi.

4 - 5

L'ATS48 démarre le moteur parce qu'il y a eu un ordre de marche sur RUN avec KA et KAT.
KAM1 retombe par KAT.
KM11 reste fermé.

6 - 7

En fin de démarrage, R2 de l'ATS48 monte, SHUNT est fermé, KM12 est fermé par SHUNT et KM11 reste fermé.

8 - 9

Après un court instant R2 retombe et R1 aussi (fonction court-circuitage démarreur).
KM11 s'ouvre parce que ACDEC est ouvert.
Le moteur reste alimenté par KM12.
L'ATS48 affiche un code d'état.

Pour démarrer un autre moteur, la même logique sera respectée. Pour démarrer le moteur n, utilisez BPMn et pour arrêter le moteur n utiliser BPAn. Il est possible de démarrer et d'arrêter n'importe quel moteur dans n'importe quel ordre.

Pour arrêter le moteur 1 presser BPA1. AR1 se ferme

a - b - c - d

K et KALI sont fermés.
LI de l'ATS48 reçoit un ordre de KALI et KALIT (LI doit être ajusté à la valeur LIC).
R1 et R2 de l'ATS48 montent (une impulsion sur R2 et R1 reste fermé jusqu'à l'arrêt complet du moteur).

e

KM11 se ferme.
Après un temps réglable KT et KALIT montent.

f

L'ATS48 reçoit un ordre d'arrêt par KALIT.

g

KM12 retombe.
L'ATS48 décélère le moteur.

h

R1 de l'ATS48 s'ouvre quand le moteur est totalement arrêté.

i

KM11 s'ouvre.
L'ATS48 est prêt à démarrer ou à arrêter un autre moteur.

ATS 48 : 1 sens de marche avec contacteur de ligne, démarrage et ralentissement de plusieurs moteurs en cascade avec un seul Altistart.

Chronogramme

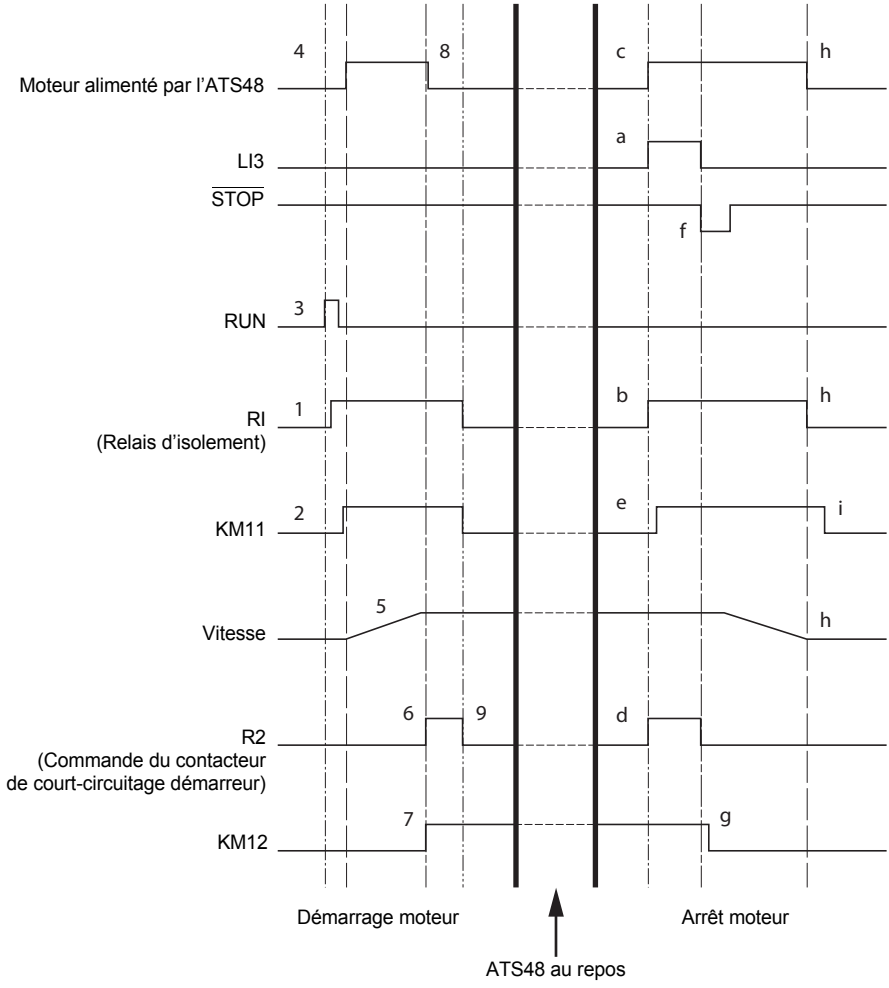

Protections thermiques

Protection thermique du démarreur

Protection thermique par sonde CTP fixée sur le radiateur et par calcul de l'échauffement des thyristors.

Protection thermique du moteur

Le démarreur calcule en permanence l'échauffement du moteur à partir du courant nominal réglé In et du courant réellement absorbé.

Les échauffements peuvent être provoqués par une faible ou forte surcharge, de longue ou de courte durée. Les courbes de déclenchement pages suivantes sont établies en fonction du rapport entre le courant de démarrage Id et le courant moteur (réglable) In.

La norme IEC60947-4-2 définit les classes de protection donnant les capacités de démarrage du moteur à chaud et à froid sans défaut thermique. Les différentes classes de protection sont données pour un état FROID (correspond à un état thermique moteur stabilisé, hors tension) et pour un état CHAUD (correspond à un état thermique moteur stabilisé, à puissance nominale).

En sortie d'usine, le démarreur est en classe de protection 10.
Il est possible de modifier cette classe de protection à partir du menu PrO.

La protection thermique affichée par le démarreur correspond à la constante de temps fer.

- une alarme surcharge qui prévient si le moteur dépasse son seuil d'échauffement nominal (état thermique moteur = 110 %).
- un défaut thermique qui arrête le moteur en cas de dépassement du seuil critique d'échauffement (état thermique moteur = 125 %).

Dans le cas d'un démarrage long le démarreur peut déclencher en défaut ou alarme thermique malgré une valeur affichée inférieure à la valeur de déclenchement.

Le défaut thermique peut être signalé par le relais R1, si la protection thermique n'a pas été inhibée.

Après un arrêt du moteur ou une mise hors tension du démarreur, le calcul de l'état thermique se poursuit, même si le contrôle n'est pas alimenté. Le contrôle thermique de l'Altistart interdit le redémarrage du moteur si son échauffement est encore trop élevé.

Dans le cas d'emploi d'un moteur spécial (antidéflagrant, immergé,...), prévoir une protection thermique par sondes PTC.

Protection thermique du moteur

Courbes à froid

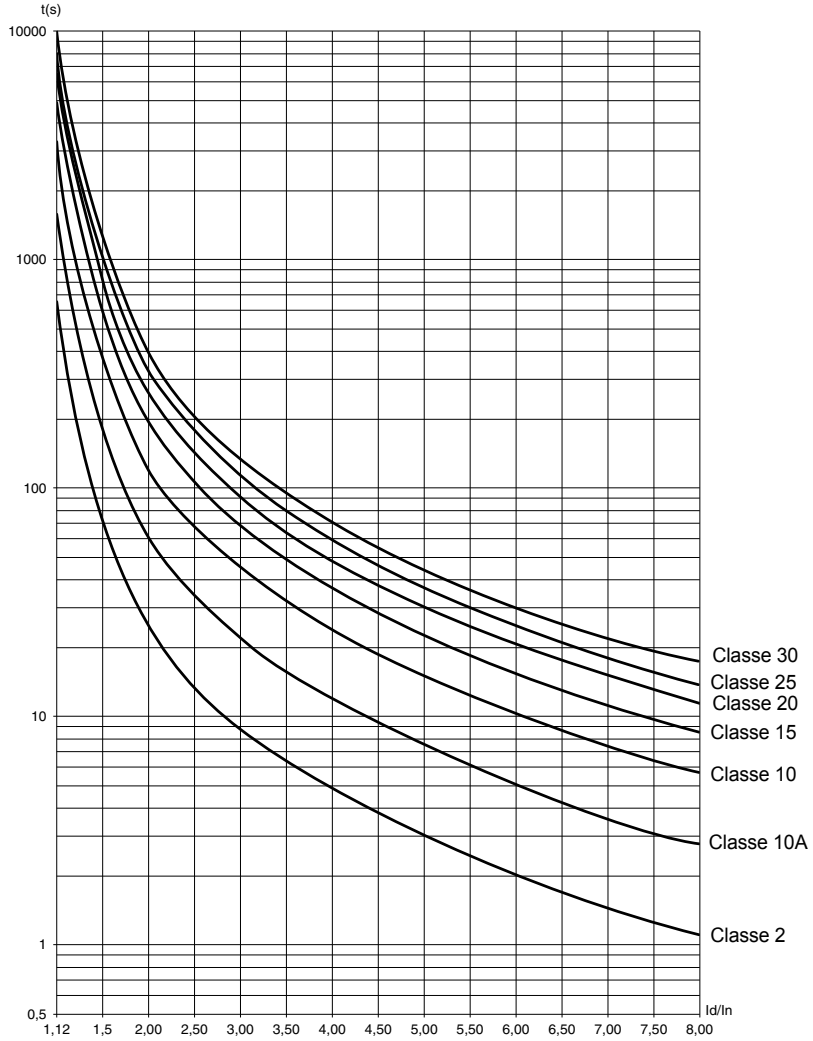

Temps de déclenchement pour application standard (Classe 10)		Temps de déclenchement pour application sévère (Classe 20)	
3 In	5 In	3,5 In	5 In
46 s	15 s	63 s	29 s

Protection thermique du moteur

Courbes à chaud

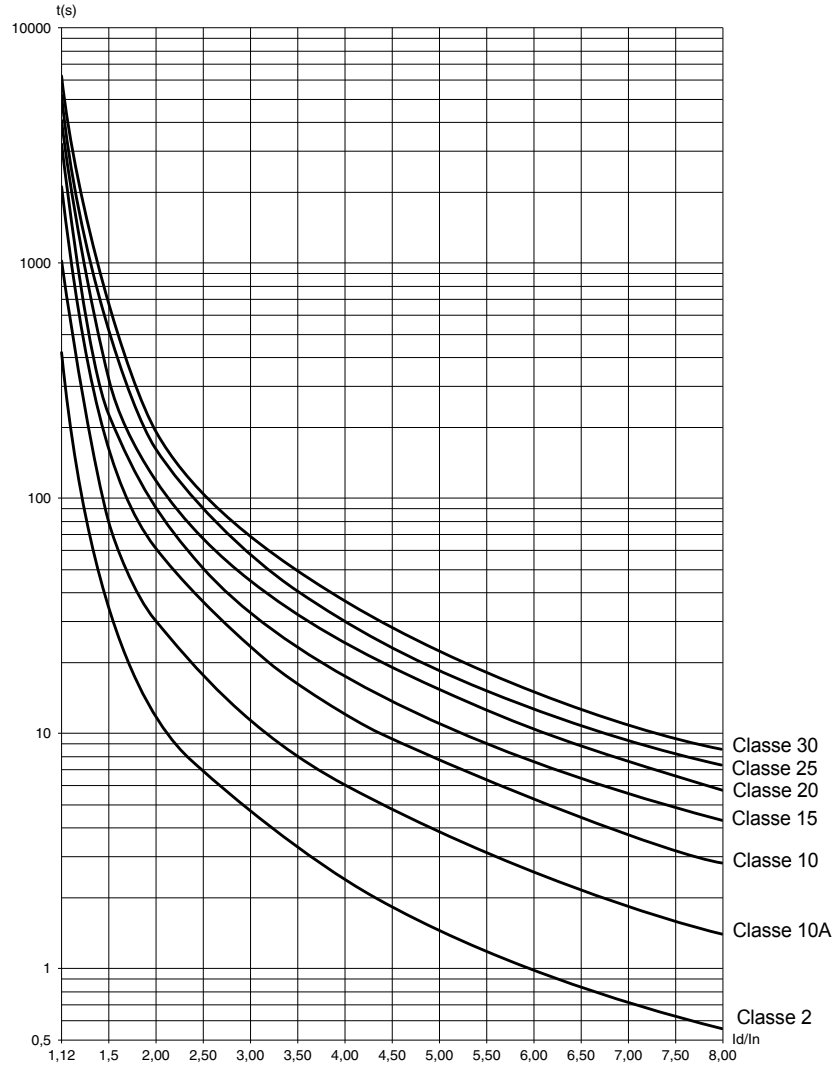

Temps de déclenchement pour application standard (Classe 10)		Temps de déclenchement pour application sévère (Classe 20)	
3 In	5 In	3,5 In	5 In
23 s	7,5 s	32 s	15 s

Protection thermique moteur par sondes PTC

Il est possible de connecter au bornier de la carte contrôle des sondes PTC intégrées au moteur et mesurant sa température. Cette information analogique est gérée par le démarreur.

Le traitement de l'information " dépassement thermique sonde PTC " peut être utilisé de deux façons :

- arrêt sur défaut lorsque le signal est actif
- alarme lorsque le signal est actif. Cette alarme peut être visualisée dans un mot d'état du démarreur (liaison série) ou sur une sortie logique configurable.

Nota :
La protection par sondes PTC ne désactive pas la protection thermique moteur effectuée par calcul, les 2 protections peuvent cohabiter.

Afficheur et programmation

Fonctions des touches et de l'afficheur

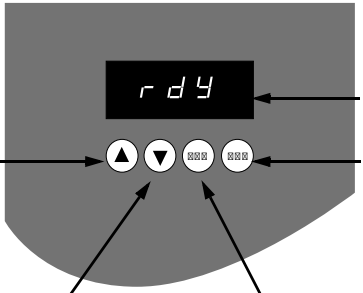

- 3 afficheurs "7 segments"
- Passe au menu ou au paramètre précédent, ou augmente la valeur affichée
- Entre dans un menu ou dans un paramètre, ou enregistre le paramètre ou la valeur affichée
- Passe au menu ou au paramètre suivant, ou diminue la valeur affichée
- Sort d'un menu ou d'un paramètre, ou abandonne la valeur affichée pour revenir à la valeur précédente en mémoire

L'action sur ▲ ou ▼ ne mémorise pas le choix.

Mémorisation, enregistrement du choix affiché : ENT

La mémorisation s'accompagne d'un clignotement de l'affichage

Règle d'affichage

Le principe d'affichage des nombres diffère selon l'échelle maxi du paramètre et sa valeur.

- Echelle maxi 9990 :
  - valeurs 0,1 à 99,9 (exemples : 05.5 = 5,5 ; 55.0 = 55 ; 55.5 = 55,5)
  - valeurs 100 à 999 (exemple : 555 = 555)
  - valeurs 1000 à 9990 (exemple : 5.55 = 5550)
- Echelle maxi 99900 :
  - valeurs 1 à 999 (exemples : 005 = 5 ; 055 = 55 ; 550 = 550)
  - valeurs 1000 à 9990 (exemple : 5.55 = 5550)
  - valeurs 10000 à 99900 (exemple : 55.5 = 55500)

Afficheur et programmation

Accès aux menus

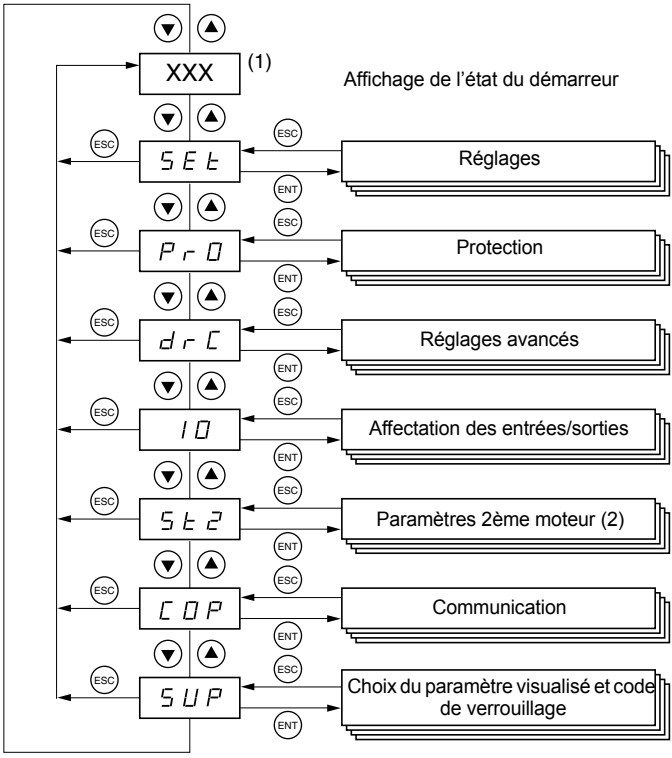

(1) La gestion de la valeur "XXX" affichée est donnée dans le tableau ci-après.
(2) Le menu St2. n'est visible que si la fonction "second jeu de paramètres moteur" est configurée.

Accès aux paramètres

Mémorisation, enregistrement du choix affiché : (ENT)

La mémorisation s'accompagne d'un clignotement de l'affichage

Exemple :

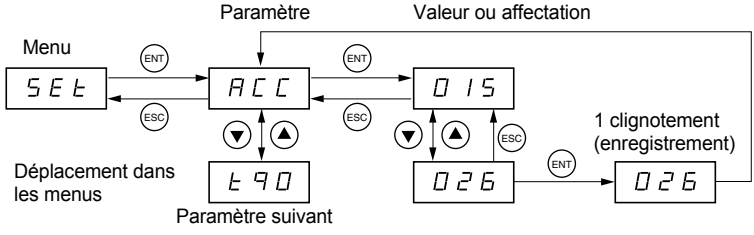

Affichage de l’état du démarreur

La valeur "XXX" affichée suit les règles suivantes :

Valeur affichée	Condition
Code du défaut	Démarreur en défaut
nLP rdY	Démarreur sans ordre de marche et : • Puissance non alimentée • Puissance alimentée
tbS	Temporisation de démarrage non écoulée
HEA	Chauffage moteur en cours
Paramètre de surveillance choisi par l’utilisateur (menu SUP). En réglage usine : courant moteur	Démarreur avec ordre de marche
brL	Démarreur en freinage
Stb	Attente d’un ordre de commande (RUN ou STOP) en mode cascade

Lorsque le démarreur est en limitation de courant, la valeur affichée "XXX" clignote.

Dès que le démarreur est en défaut, il affiche un code défaut, il reste possible de modifier des paramètres.

Option terminal déporté

FRANÇAIS

Le terminal déporté **VW3 G48101** peut être monté sur la porte du coffret ou de l'armoire; il est fourni avec un joint qui permet un montage avec degré d'étanchéité IP65. Il est muni d'un câble de 3 m de long avec prises, la communication se fait par la connexion RJ45 / modbus du démarreur (**voir la notice fournie avec le terminal**). Il comporte le même affichage et les mêmes boutons de programmation que l'Altistart 48 avec en plus un commutateur de verrouillage d'accès aux menus.

Vue face avant :

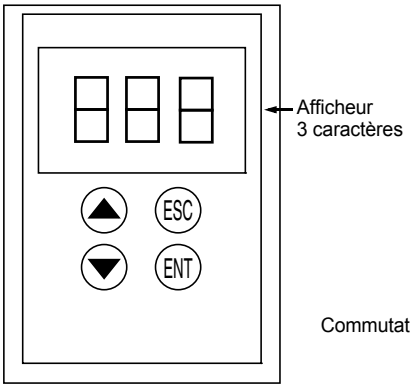

Vue face arrière :

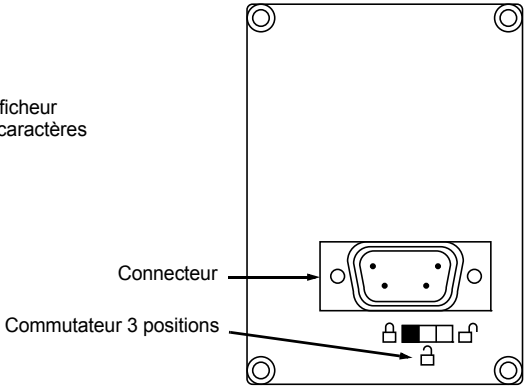

Gestion du commutateur du terminal déporté

Le commutateur 3 positions du terminal est utilisé de la manière suivante :

- position verrouillée : seuls les paramètres de surveillance sont accessibles et la modification du choix du paramètre affiché lorsque le démarreur est en marche n'est pas possible.
- position mi-verrouillée : accès limité aux paramètres des menus SEt, PrO et SUP.
- position déverrouillée : tous les paramètres sont accessibles.

Les éventuelles restrictions d'affichage dues au commutateur du terminal déporté restent applicables sur le démarreur après avoir été déconnecté y compris après une mise hors tension du démarreur.

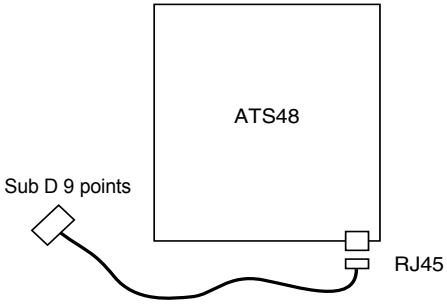

Menu Réglages SEt

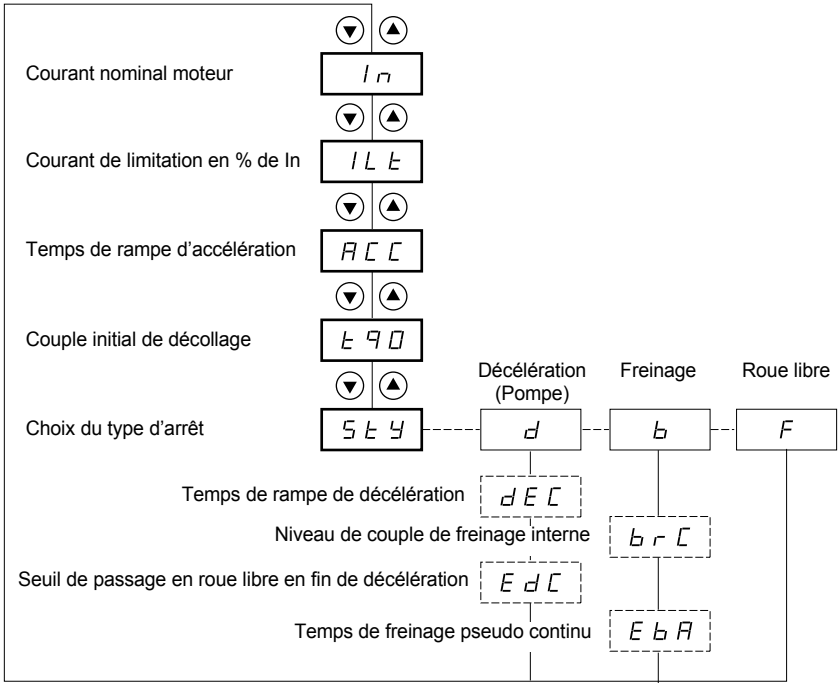

Paramètres dans menu

Sélection possible

Paramètre apparaissant selon la sélection

Pour l'accès aux paramètres, page 46.

La modification des paramètres de réglages n'est possible qu'à l'arrêt.

Code	Description	Plage de réglage	Préréglage usine
In	**Courant nominal moteur**	0,4 à 1,3 ICL	(1)
	Régler la valeur du courant nominal moteur indiqué sur la plaque signalétique, même dans le cas du couplage du démarreur dans l'enroulement triangle du moteur (dLt dans le menu PrO). Vérifier que ce courant est compris entre 0,4 et 1,3 ICL (ICL : Calibre du démarreur).		
ILt	**Courant de limitation**	150 à 700 % de In, limité à 500 % de ICL	400 % de In
	Le courant de limitation ILt s'exprime en % de In. À charge maximale, la valeur ILt doit être suffisamment élevée pour permettre le démarrage du moteur. Si l'application requiert plus de 500 % de IcL, la taille du démarreur progressif doit être changée en conséquence. Il est limité à 500 % de ICL (calibre du démarreur, voir les tableaux "Association démarreur-moteur", page 14.) Courant de limitation = ILt x In. exemple 1 : In = 22 A, ILt = 300 %, courant de limitation = 300 % x 22 A = 66 A exemple 2 : ATS 48C21Q, avec ICL = 210 A In = 195 A, ILt = 700 %, courant de limitation = 700 % x 195 = 1365, limité à 500 % x 210 = 1050 A		
ACC	**Temps de rampe d'accélération**	1 à 60 s	15 s
	C'est le temps de croissance du couple de démarrage entre 0 et le couple nominal Cn, c'est à dire la pente de la rampe de croissance de couple. 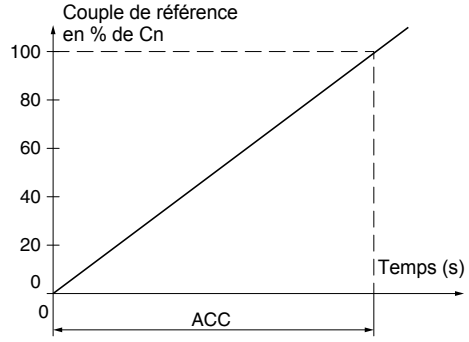 		

(1) Réglage usine de In correspondant à la valeur usuelle d'un moteur normalisé 4 pôles en tension 400 V en classe 10 (pour ATS 48•••Q).
Réglage usine de In correspondant à la valeur usuelle d'un moteur normalisé suivant NEC en tension 460 V, en classe 10 (pour ATS 48•••Y).

Code	Description	Plage de réglage	Préréglage usine
tq0	**Couple initial de décollage**	0 à 100 % de Cn	20 %
	Réglage du couple initial lors des phases de démarrage, varie de 0 à 100 % du couple nominal Ce couple initiale de décollage doit être réglée afin que le moteur tourne dès qu'elle lui est appliquée. Si le couple est trop faible, le moteur aura des difficultés à démarrer après le signal de « marche ». 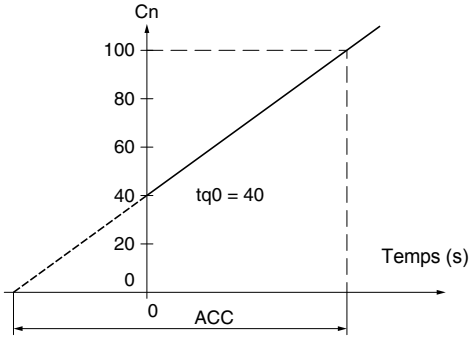 		
StY	**Choix du type d'arrêt**	d-b-F	-F-
	Trois types d'arrêts sont possibles : **- d -** : Arrêt décéléré par contrôle du couple. Le démarreur applique un couple moteur afin de décélérer progressivement sur la rampe, évitant un arrêt brutal. Ce type d'arrêt permet de réduire efficacement les coups de bélier sur une pompe. **- b -** : Arrêt en freinage dynamique, le démarreur générant un couple de freinage dans le moteur, afin d'assurer le ralentissement en cas d'inertie importante. **- F -** : Arrêt en roue libre, aucun couple n'est appliqué au moteur par le démarreur. **Nota : Si le démarreur est couplé dans l'enroulement triangle du moteur seul l'arrêt type b n'est pas autorisé.**		

Code	Description	Plage de réglage	Préréglage usine
dEC	**Temps de rampe de décélération**	1 à 60 s	15 s

Ce paramètre n'est accessible que si StY = -d-.
Permet de régler un temps compris entre 1 à 60 s, pour passer du couple estimé au couple nul (= pente de la rampe de décroissance de couple lors d'un arrêt -d-).
Ceci adapte la progressivité de la décélération et évite les chocs hydrauliques sur les applications pompe par une modification de la pente de la référence couple.

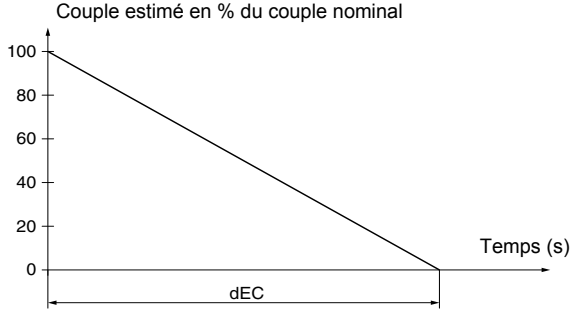

Code	Description	Plage de réglage	Préréglage usine
EdC	**Seuil de passage en roue libre en fin de décélération**	0 à 100 %	20 %

Ce paramètre n'est accessible que si StY = -d- et si le paramètre CLP du menu entraînement (drC) est resté en préréglage usine (On).
Permet de régler le niveau du couple final compris entre 0 et 100 % du couple estimé en début de décélération.
Dans les applications du type pompe, le contrôle de la décélération n'est pas nécessairement effective en dessous d'un niveau de charge réglé par Edc.
Si le couple estimé en début de décélération est en dessous de 20, c'est-à-dire 20 % du couple nominal, la décélération contrôlée n'est pas activée, passage en roue libre.

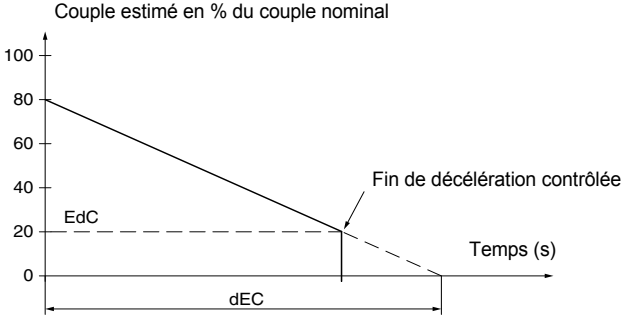

Code	Description	Plage de réglage	Préréglage usine
brC	**Niveau de couple de freinage interne**	0 à 100 %	50 %
	Ce paramètre n'est accessible que si StY = -b-. Pour arrêt type -b-, permet de régler l'intensité de freinage. Le freinage est actif jusqu'à 20 % de la vitesse nominale, l'arrêt total du moteur s'ajuste en réglant le temps de l'injection de courant pseudo continu dans le moteur (sur deux phases). Voir paramètre suivant EbA. 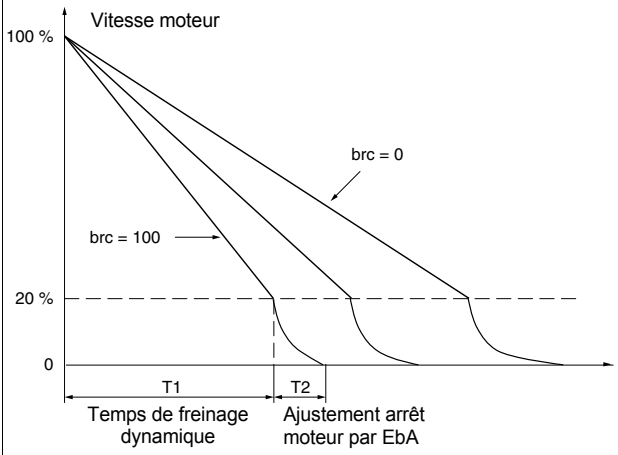 Temps injection pseudo continu : T2 = T1 x EbA Nota : le temps T1 n'est pas déterminé par brC. T1 est le temps en secondes qu'il a fallu au moteur pour passer de 100 % de la vitesse nominale à 20 % (dépend donc des caractéristiques moteur et de l'application).		
EbA	**Temps de freinage pseudo continu**	20 à 100 %	20 %
	Ce Paramètre N'est Accessible Que Si Sty = -b-. Pour Arrêt Type -b-, Ajustement Du Temps D'injection De Courant En Fin De Freinage. Permet D'ajuster Le Temps D'injection De Courant. Réglable De 20 À 100 % Du Temps De Freinage Dynamique (T1). Exemple : Freinage Dynamique = 10 S (T1) Le Temps D'arrêt Peut Varier De 2 À 10 S (T2) Eba = 20 Correspond À Un Temps D'injection De 2 S Eba = 100 Correspond À Un Temps D'injection De 10 S Réglage Usine : 20		

Menu Protection PrO

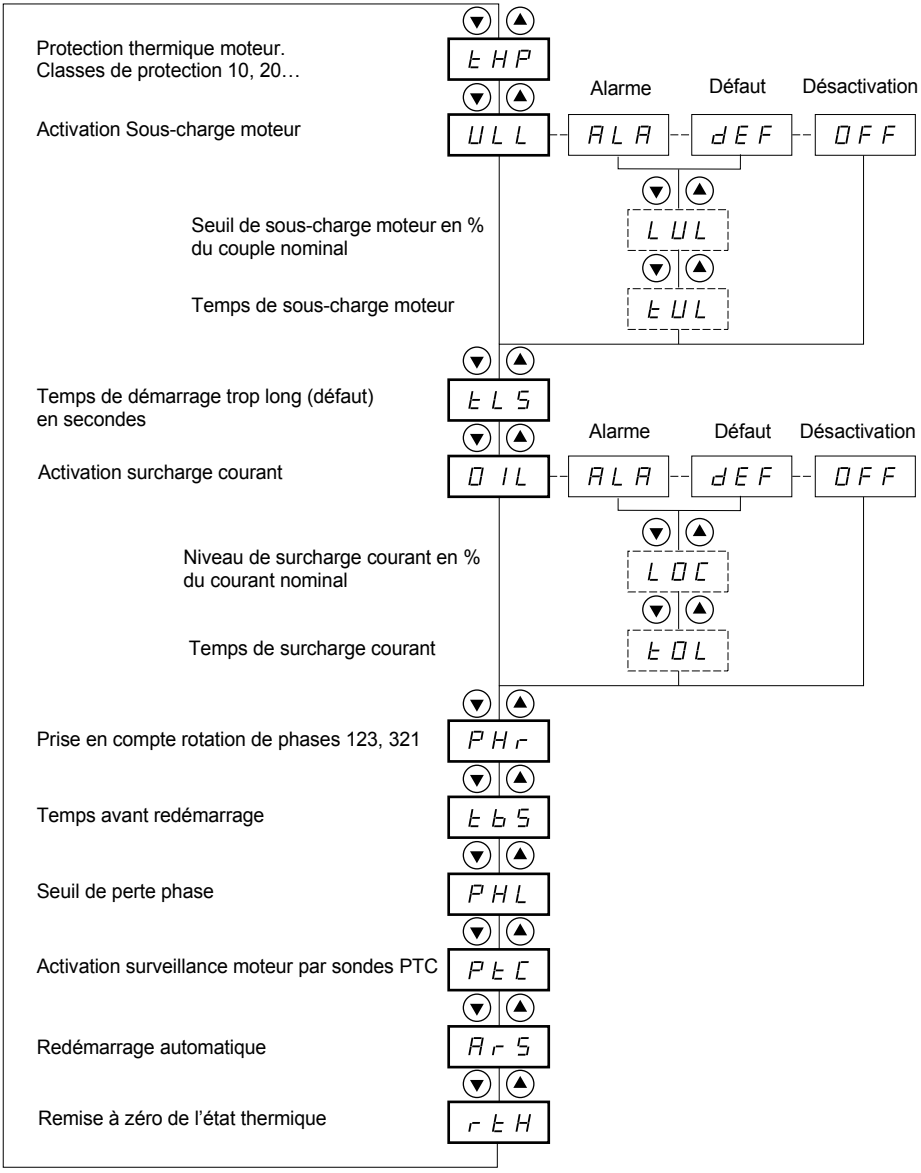

Paramètres dans menu

Sélection possible

Paramètre apparaissant selon la sélection

Pour l'accès aux paramètres, page 46.

La modification des paramètres de protection n'est possible qu'à l'arrêt.

Code	Description	Plage de réglage	Préréglage usine
tHP	**Protection thermique moteur**		10
	Voir "Protections thermiques", page 41. 30 : classe 30 25 : classe 25 20 : classe 20 (application sévère) 15 : classe15 10 : classe 10 (application standard) 10A : classe 10A 2 : sous classe 2 OFF : pas de protection		
ULL	**Activation sous-charge moteur**		OFF
	En cas de couple moteur inférieur à un seuil réglable LUL pendant un temps supérieur à une valeur réglable tUL : - ALA : activation d'une alarme (bit interne et sortie logique configurable) - dEF : verrouillage du démarreur et affichage du défaut ULF - OFF : pas de protection 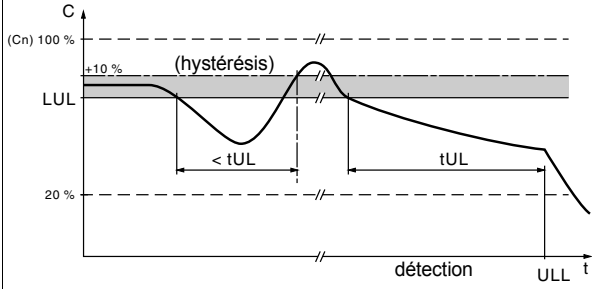 		
LUL	**Seuil de sous-charge moteur**	20% à 100% de Cn	60 %
	Ce paramètre n'est pas disponible si ULL = OFF. LUL est ajustable de 20% à 100% du couple nominal moteur.		
tUL	**Temps de sous-charge moteur**	1 à 60 s	60 s
	Ce paramètre n'est pas disponible si ULL = OFF. La temporisation tUL est activée dès que le couple moteur est inférieur au seuil LUL, elle est remise à zéro si le couple repasse ce seuil LUL de + 10% (hystérésis).		
tLS	**Temps de démarrage trop long**	10 à 999 s ou OFF	OFF
	Si le temps de démarrage dépasse la valeur de tLS, le démarreur se verrouille et affiche le défaut StF. Les conditions qui déterminent la fin d'un démarrage sont : tension réseau appliquée au moteur (angle d'allumage mini) et courant moteur inférieur à 1,3 In. - OFF : pas de protection		

La configuration d'une surveillance en alarme (ALA) prévient de la présence d'un défaut mais n'assure pas de protection directe de l'installation

Code	Description	Plage de réglage	Préréglage usine
OIL	**Activation surcharge courant**		OFF
	Fonction active uniquement en régime établi. Si le courant moteur dépasse un seuil réglable LOC pendant un temps supérieur à une valeur réglable tOL : - ALA : activation d'une alarme (bit interne et sortie logique configurable) - dEF : verrouillage du démarreur et affichage du défaut OLC - OFF : pas de protection 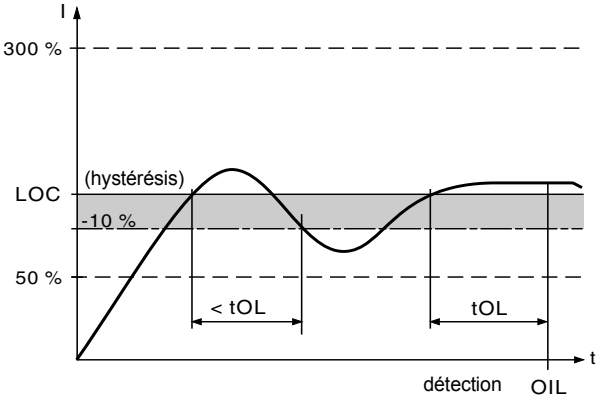		
LOC	**Seuil de surcharge courant**	50% à 300% de In	80 %
	Ce paramètre n'est pas disponible si OIL = OFF. LOC est ajustable de 50% à 300% du courant nominal moteur.		
tOL	**Temps de surcharge courant**	0,1 à 60 s	10 s
	Ce paramètre n'est pas disponible si OIL = OFF. La temporisation tOL est activée dès que le courant moteur est supérieur au seuil LOC, elle est remise à zéro si le courant redescend sous ce seuil LOC d'au moins 10% (hystérésis).		

La configuration usine surveillance en alarme (ALA) prévient de la présence d'un défaut mais n'assure pas de protection directe de l'installation

Menu Protection PrO

Code	Description	Plage de réglage	Préréglage usine
PHr	**Protection contre l'inversion des phases du réseau**	321 ou 123 ou no	no
	Si les phases du réseau ne sont pas dans l'ordre configuré, le démarreur se verrouille et affiche le défaut PIF. - 321 : sens inverse (L3 - L2 - L1) - 123 : sens direct (L1 - L2 - L3) - no : pas de surveillance		
tbS	T**emps avant redémarrage**	0 à 999 s	2 s
	Evite des démarrages consécutifs trop rapprochés pouvant surchauffer le moteur. La temporisation est déclenchée à partir du passage en roue libre. En commande 2 fils le redémarrage s'effectue après la temporisation si l'entrée de commande RUN est restée actionnée. En commande 3 fils le redémarrage s'effectue après la temporisation si on donne un nouvel ordre de commande RUN (front montant). Le démarreur affiche "tbS" pendant la temporisation.		
PHL	**Seuil de perte phase**	5 à 10 %	10 %
	Si le courant moteur devient inférieur à ce seuil dans une phase pendant 0,5 s ou dans les trois phases pendant 0,2 s, le démarreur se verrouille et affiche le défaut PHF. Réglable entre 5 et 10 % du calibre du démarreur ICL.		
PtC	**Activation surveillance moteur par sondes PTC**		OFF
	Les sondes PTC du moteur doivent être connectées à l'entrée analogique adéquate. Cette protection est indépendante de la protection thermique calculée (paramètre tHP), les deux protections peuvent être utilisées conjointement. - ALA : activation d'une alarme (bit interne et sortie logique affectable) - dEF : verrouillage du démarreur et affichage du défaut OtF - OFF : pas de protection		
Ars	**Redémarrage automatique**	On - OFF	OFF
	Après verrouillage sur défaut, si celui-ci a disparu et que les autres conditions de fonctionnement le permettent. Le redémarrage s'effectue par une série de tentatives automatiques séparées de 60 s. Si le démarrage ne s'est pas effectué au bout de 6þtentatives, la procédure est abandonnée et le démarreur reste verrouillé jusqu'à sa mise hors puis sous tension ou son réarmement manuel (voir chapitre "Défauts - causes - remèdes" page 77). Les défauts qui autorisent cette fonction sont: PHF FrF, CLF, USF. Le relais de sécurité du démarreur reste alors enclenché si la fonction est active. L'ordre de marche doit rester maintenu. Cette fonction n'est utilisable qu'en commande 2 fils. - OFFþ: Fonction inactive - Onþ: Fonction active ⚠ **S'assurer que le redémarrage intempestif ne présente pas de danger humain ou matériel**		
rtH	**Remise à zéro de l'état thermique moteur calculée par le démarreur**	no - YES	no
	- no : Fonction inactive - YES : Fonction active		

⚠ **La configuration usine surveillance en alarme (ALA) prévient de la présence d'un défaut mais n'assure pas de protection directe de l'installation**

Menu Réglages avancés drC

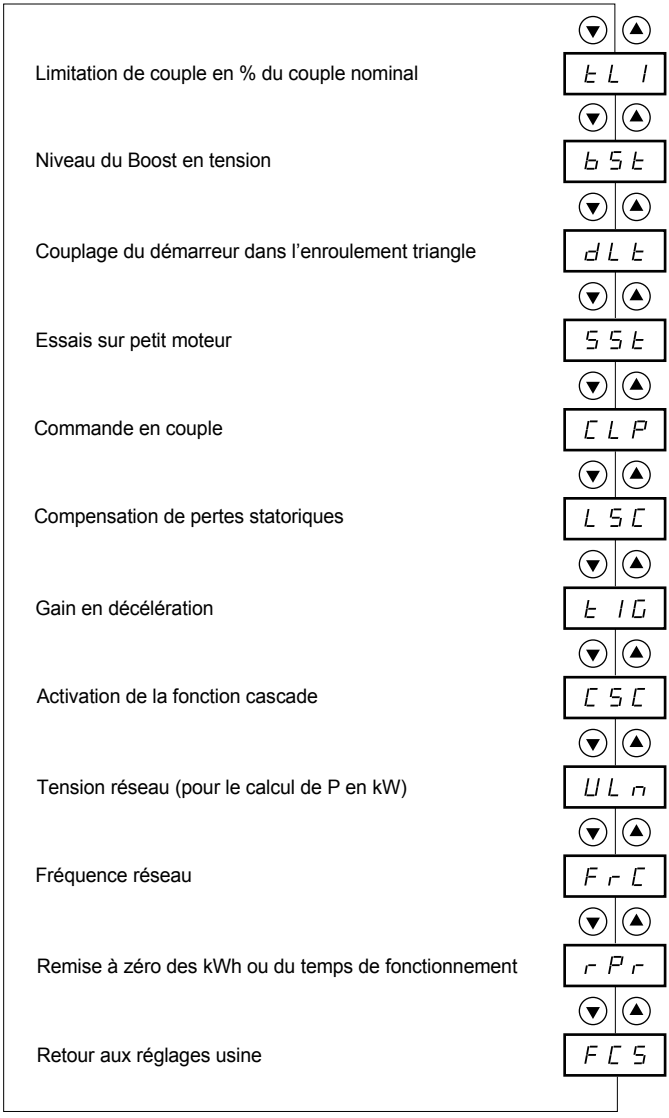

Paramètres dans menu

La modification des paramètres de Réglages avancés n'est possible qu'à l'arrêt.

Code	Description	Plage de réglage	Préréglage usine
tLI	**Limitation de couple.**	10 à 200 % ou OFF	OFF
	Permet d'écrêter la référence couple pour éviter des passages en hypersynchrone sur des applications à forte inertie. Permet un démarrage à couple constant si tqO = tLI. - OFF : pas de limitation - 10 à 200 : réglage de la limitation en % du couple nominal		
bSt	**Niveau du Boost en tension.**	50 à 100 % ou OFF	OFF
	Possibilité d'appliquer à l'apparition d'un ordre de marche pendant 100 ms une tension réglable. A l'issue de cette durée, le démarreur reprend une rampe d'accélération standard à partir de la valeur de couple initial réglé (tq0). Cette fonction permet de vaincre un éventuel couple "de décollage" (phénomène d'adhérence à l'arrêt ou dur mécanique). - OFF : Fonction inactive - 50 à 100þ: réglage en % de la tension nominale moteur 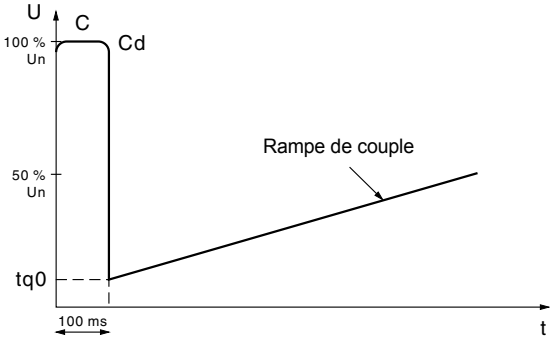 **En cas de surclassement du démarreur (Im moteur > Im ATS48), une valeur trop élevée du paramètre bSt peut provoquer un verrouillage du démarreur en OCF**		
dLt	**Couplage du démarreur dans l'enroulement triangle.**	on - OFF	OFF
	Cette disposition permet un surclassement de 1,7 en puissance du démarreur, mais n'autorise pas de freinage dynamique. - OFF : couplage normal en ligne - On : couplage dans l'enroulement triangle du moteur Le courant nominal moteur In reste celui de la plaque signalétique du moteur, et l'affichage du courant correspond au courant ligne du réseau d'alimentation. La valeur du courant nominal In (menu SEt) reste la valeur plaquée moteur pour le couplage triangle, le démarreur effectuant lui même la conversion pour contrôler le courant dans les enroulements. Ce paramètre n'est accessible que pour les démarreurs **ATS 48•••Q ou ATS48•••YS316**. **• Avec cette fonction, le freinage dynamique n'est pas possible.** **• Pas de fonction cascade** **• Pas de préchauffage** **• Respecter impérativement le schéma de raccordement page 33**		

Menu Réglages avancés drC

Code	Description	Plage de réglage	Préréglage usine
SSt	**Essais sur petit moteur**	On-OFF	OFF
	Pour vérifier le démarreur dans un environnement de test ou de maintenance, sur un moteur de puissance très inférieure au calibre du démarreur (en particulier pour les démarreurs de forte puissance). Le paramètre commande en couple CLP est automatiquement désactivé. - OFF : fonction inactive - On : fonction active • **SSt revient à l'état OFF dès la coupure de la tension contrôle. A la remise sous-tension suivante le défaut PHF et le paramètre CLP retrouvent leur configuration initiale.** • **SST est uniquement dédié à la maintenance et les tests du démarreur.**		
CLP	**Commande en couple** (type de commande).	On-OFF	On
	- OFF : fonction inactive - On : fonction active En position On le démarrage et le ralentissement se font en rampe de couple. En position OFF le démarrage et le ralentissement se font par une variation de tension. Pour les applications mettant en jeu des moteurs en parallèle sur un même démarreur ou un moteur de très faible puissance par rapport au calibre du démarreur (utilisation d'un moteur sous-dimensionné pour essai du démarreur), la commande en tension est préconisée (CLP = OFF).		
LSC	**Compensation des pertes statoriques**	0 à 90 %	50 %
	Paramètre actif en phases d'accélération (et de décélération si StY = -d-). En cas d'oscillations de couple, réduire ce paramètre progressivement jusqu'à un fonctionnement correct. Les phénomènes d'oscillations sont principalement rencontrés en cas de couplage du démarreur dans l'enroulement triangle du moteur et en cas de moteurs à fort glissement.		
tIG	**Gain en décélération** (pour commande en couple).	10 à 50 %	40 %
	Ce paramètre n'est accessible que si CLP = On et si le paramètre StY (menu réglages SEt) = -d-. Permet d'éliminer les instabilités en décélération. Ajuster en plus ou moins en fonction des oscillations.		
CSC	**Activation de la fonction cascade**	On-OFF	OFF
	Voir schéma page . - On : fonction active - OFF : fonction inactive Ce paramètre n'est accessible que si le relais R1 a été préalablement affecté à la fonction "relais d'isolement" et si les fonctions "forçage arrêt roue libre", "couplage du démarreur dans l'enroulement triangle du moteur" et "préchauffage" ne sont pas configurées. Affecter une entrée LI = LIC. 255 moteurs maxi.		
ULn	**Tension réseau.**	170 à 460 V (ATS48••Q) 180 à 790 V (ATS48••Y)	400 V (ATS48••Q) 460 V (ATS48••Y)
	Ce paramètre sert au calcul de la puissance affichée (paramètres LPr et LAP du menu SUP). La précision de l'affichage dépend du réglage correct de ce paramètre.		

Menu Réglages avancés drC

Code	Description	Plage de réglage	Préréglage usine
FrC	**Fréquence réseau.**	50-60-AUt	AUt
	- 50 : 50 Hz (tolérance de surveillance du défaut fréquence FrF = ± 20 %). - 60 : 60 Hz (tolérance de surveillance du défaut fréquence FrF = ± 20 %). - AUt : reconnaissance automatique de la fréquence du réseau par le démarreur avec une tolérance de surveillance du défaut fréquence FrF = ± 5 %. Les choix 50 et 60 sont recommandés en cas d'alimentation par groupe électrogène, compte tenu de leur grande tolérance.		
rPr	**Remise à zéro des kWh ou du temps de fonctionnement**	no-APH-trE	no
	- no : fonction inactive - APH : remise à zéro des kWh (1) - trE : remise à zéro du temps de fonctionnement Une confirmation de l'ordre de remise à zéro est à faire par ENT. Les actions de APH et trE sont immédiates, puis le paramètre revient automatiquement à no.		
FCS	**Retour aux réglages usine.**	no-YES	no
	Permet de réinitialiser tous les paramètres à leur valeur "sortie d'usine". - no : fonction inactive - YES : fonction active, nécessite un appui prolongé (2 s environ) pour être prise en compte, puis confirmation par un clignotement de l'affichage. Le retour à no du paramètre FCS se fait ensuite automatiquement à l'appui sur ESC. **Ce paramètre n'est pas modifiable via le terminal déporté.**		

(1) Cette information "kWh consommés" est accessible seulement avec l'atelier logiciel PowerSuite ou en ligne avec Modbus (adresse W4074).

Menu Affectation des entrées / sorties IO

FRANÇAIS

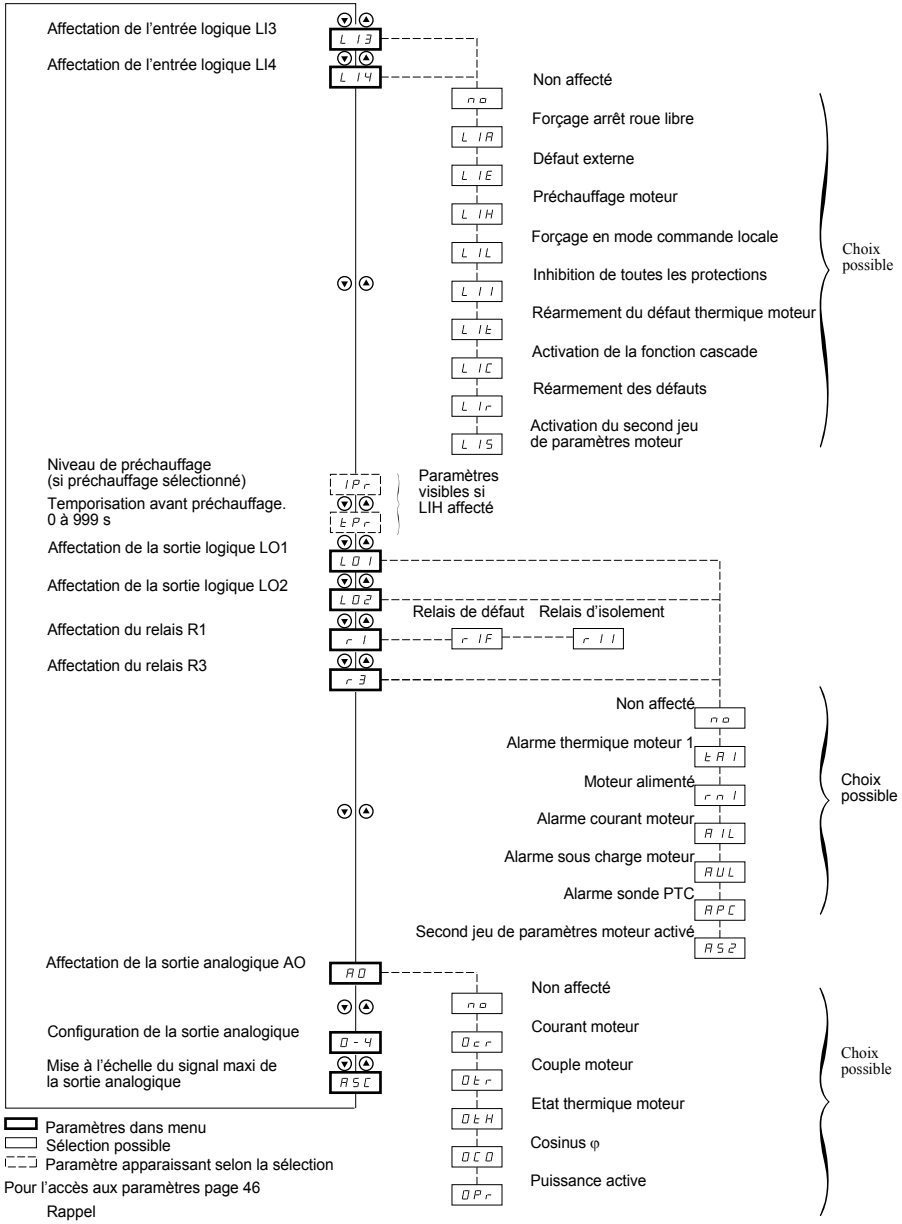

Pour l'accès aux paramètres page 46

Rappel

Entrée logique RUN : non affectable
Entrée logique STOP : non affectable
Commande du contacteur de court-circuitage démarreur : non affectable (R2)

Menu Affectation des entrées / sorties IO

La modification des paramètres d'affectation des entrées / sorties n'est possible qu'à l'arrêt.

Code	Description	Plage de réglage	Préréglage usine
L I3 L I4	**Entrées logiques**		LIA LIL

La fonction choisie est active si l'entrée est sous tension.
- no : non affectée.
- LIA : forçage arrêt roue libre dès l'apparition d'un ordre STOP. Ce choix n'apparaît pas si le paramètre CSC du menu drC est sur "On". Force la configuration de l'arrêt en type roue libre, mais ne commande pas l'arrêt.
- LIE : défaut externe. Permet au démarreur de prendre en compte un défaut utilisateur externe (niveau, pression,...). Le moteur s'arrête en roue libre et le démarreur affiche EtF.
- LIH : (1) préchauffage moteur. Ce choix n'apparaît pas si le paramètre CSC du menu drC est sur "On". Permet de protéger le moteur contre le gel ou contre des écarts de température pouvant provoquer de la condensation. A l'arrêt du moteur un courant réglable IPr traverse celui ci après une temporisation réglable tPr, si l'entrée est activée. Ce courant échauffe le moteur sans entraîner sa rotation. IPr et tbr doivent être ajustés (voir ci après).

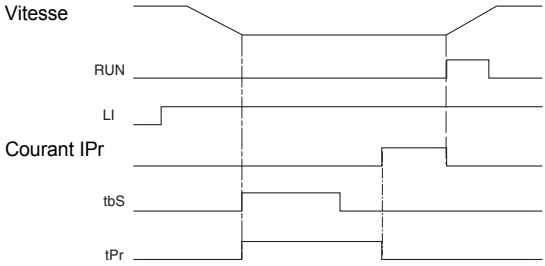

Le préchauffage est établi lorsque l'entrée est sous tension et que le moteur est arrêté, après que les temporisations tPr et tbS (menu PrO) soient écoulées. Le préchauffage s'arrête si l'entrée est désactivée, ou si un ordre de marche est donné, ou si l'entrée STOP est actionnée.
- LIL : forçage en mode de commande locale. En cas d'utilisation de la liaison série, permet de passer du mode ligne (commande par liaison série) au mode local (commande par le bornier).
- LII : (1) inhibition de toutes les protections. Attention cette utilisation entraîne la perte de la garantie du démarreur. Permet une marche forcée du démarreur dans les cas d'urgence (désenfumage par exemple).
- LIt : réarmement du défaut thermique moteur.
- LIC : activation de la fonction cascade. Dans ce cas la protection thermique moteur est inhibée et le relais R1 doit être configuré en relais d'isolement. Permet de démarrer et de décélérer plusieurs moteurs identiques à la suite avec un seul démarreur (voir schéma d'application).
- LIr : réarmement des défauts réarmables.
- LIS : activation du second jeu de paramètres moteur. Permet de démarrer et de décélérer deux moteurs différents à la suite ou un moteur avec deux configurations différentes avec un seul démarreur.

(1) Cette affectation nécessite un appui sur ENT pendant 10 s pour être validée. (Confirmation par un clignotement de l'affichage).
Ce paramètre n'est pas modifiable via le terminal déporté.

Menu Affectation des entrées / sorties IO

Code	Description	Plage de réglage	Préréglage usine
IPr	**Niveau de préchauffage.**	0 à 100 %	0 %
	Ce paramètre apparaît après l'affectation de LI3 ou de LI4 à la fonction LIH : préchauffage moteur. Il permet de régler le courant de préchauffage. Pour régler le niveau de courant moteur, utiliser un ampèremètre à lecture courant efficace vrai. Le paramètre In n'a aucune influence sur le courant IPr. **ATTENTION** **RISQUE D'ENDOMMAGEMENT DU MOTEUR** Si la fréquence de ligne est fluctuant, il est obligatoire d'utiliser un appareil externe pour controler la fréquence et de désactiver la fonction de préchauffage en cas de fluctuations. **Le non respect de ces instructions entrainera la mort ou des blessures graves.**		
tPr	**Temporisation avant préchauffage.**	0 à 999 mn	5 mn
	Ce paramètre apparaît après l'affectation de LI3 ou de LI4 à la fonction LIH : préchauffage moteur. Le préchauffage est enclenché lorsque l'entrée est sous tension, après que les temporisations tPr et tbS (menu PrO) soient écoulées.		
LO1 LO2	**Sorties logiques**		tAI rnI
	- no : non affectée. - tAI : alarme thermique moteur. Voir 41. - rnI : moteur alimenté (informe qu'il y a potentiellement du courant dans le moteur). - AIL : alarme courant moteur (seuil OIL et temps tOL du menu PrO dépassés). Voir "Fonction active uniquement en régime établi.", page 56. - AUL : alarme sous-charge moteur (seuil LUL et temps tUL du menu PrO dépassés). Voir 55. - APC : alarme sonde PTC moteur. Voir "Activation surveillance moteur par sondes PTC", page 57. - AS2 : second jeu de paramètres moteur activé. Voir LIS "Entrées logiques", page 63.		
r1	**Relais R1**		rIF
	- r1F : relais de défaut. Le relais R1 est activé lorsque le démarreur est sous-tension (contrôle CL1/ CL2 au minimum). Le relais R1 est désactivé lorsqu'un défaut apparaît, le moteur passe en roue libre. Voir cas particulier lorsque la fonction redémarrage automatique est activée et voir "Défauts - causes - remèdes", page 77 à 82. - r1I : relais d'isolement. Le relais R1 est destiné à commander le contacteur de ligne à partir des ordres de commande RUN et STOP et à signaler un défaut. Le relais R1 est activé sur un ordre de marche RUN (ou de préchauffage). Il est désactivé en fin de freinage, de décélération, ou lors du passage en roue libre après un ordre d'arrêt STOP. Il est également désactivé dés l'apparition d'un défaut, le moteur passe en roue libre.		
r3	**Relais R3**		rnI
	- no : non affectée. - tAI : alarme thermique moteur. Voir 41. - rnI : moteur alimenté (informe qu'il y a potentiellement du courant dans le moteur). - AIL : alarme courant moteur (seuil OIL et temps tOL du menu PrO dépassés). Voir "Fonction active uniquement en régime établi.", page 56. - AUL : alarme sous-charge moteur (seuil LUL et temps tUL du menu PrO dépassés). Voir 55. - APC : alarme sonde PTC moteur. Voir "Activation surveillance moteur par sondes PTC", page 57. - AS2 : second jeu de paramètres moteur activé. Voir LIS "Entrées logiques", page 63.		

Relais R2 de fin de démarrage (non affectable)

Le relais de fin de démarrage R2 est enclenché lorsque le démarreur est sous tension, qu'il n'est pas en défaut, et que le démarrage du moteur est terminé. Il est déclenché sur demande d'arrêt et sur défaut. Il comporte un contact à fermeture (NO).

Il peut être utilisé pour autoriser le court-circuitage de l'ATS 48 en fin de démarrage.

Code	Description	Plage de réglage	Préréglage usine
AO	**Sortie analogique**		OCr
	- no : non affectée - OCr : courant moteur - Otr : couple moteur - OtH : état thermique moteur - OCO : cosinus φ - OPr : puissance active		
O 4	**Configuration du type de signal délivré par la sortie AO.**	020 - 420	020
	- 020 : signal 0 - 20 mA - 420 : signal 4 - 20 mA		
ASC	**Mise à l'échelle du signal maxi de la sortie analogique**	50 à 500 %	200
	En pourcentage de la valeur nominale du paramètre configuré ou de 1 pour le cosinus φ.		

Menu Paramètres 2ème moteur St2

Les paramètres du 1 er ou 2 ème moteur sont sélectionnés à partir de l'entrée logique (LIS). Par contre la prise en compte des paramètres moteur sélectionnés se fait :

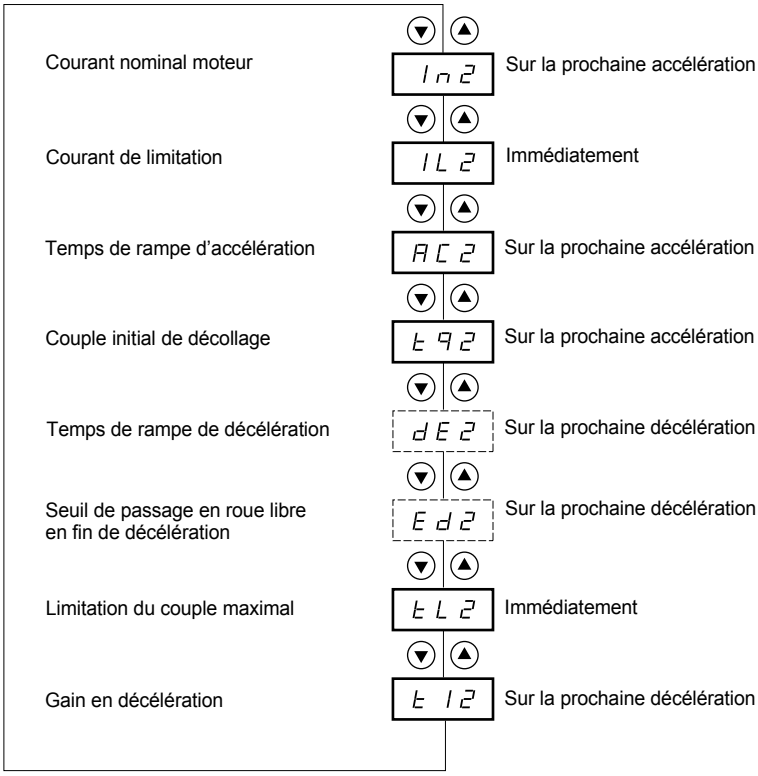

Paramètres dans menu

Paramètre apparaissant selon la sélection et l'affectation de StY dans le menu SEt

Menu Paramètres 2ème moteur St2

Ce menu n'est visible que si une entrée logique est affectée à la fonction activation du second jeu de paramètres moteur (LIS) dans le menu Affectation des entrées / sorties I O.

Code	Description	Plage de réglage	Préréglage usine
In2	**Courant nominal moteur**	0,4 à 1,3 ICL	(1)
	Régler la valeur du courant nominal moteur indiqué sur la plaque signalétique, même dans le cas du couplage du démarreur dans l'enroulement triangle du moteur (PrO). Vérifier que ce courant est compris entre 0,4 et 1,3 ICL (ICL : Calibre du démarreur). Voir "Association démarreur-moteur", page 14.		
IL2	**Courant de limitation**	150 à 700 % de In, limité à 500 % de ICL	400 % de In
	Le courant de limitation IL2 s'exprime en % de In2. Il est limité à 500 % de ICL (calibre du démarreur, voir les tableaux "Association démarreur-moteur", page 14). Courant de limitation = IL2 x In2 exemple 1 : In2 = 21 A, IL2 = 300 %, courant de limitation = 300 % x 22 A = 66 A exemple 2 : ATS 48C21Q, avec ICL = 210 A In2 = 195 A, IL2 = 700 %, courant de limitation = 700 % x 195 = 1365, limité à 500 % x 210 = 1050 A		
AC2	**Temps de rampe d'accélération**	1 à 60 s	15 s
	C'est le temps de croissance du couple de démarrage entre 0 et le couple nominal Cn, c'est à dire la pente de la rampe de croissance de couple. 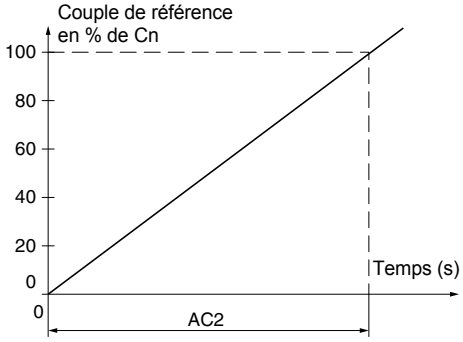 		

(1) Réglage usine de In2 correspondant à la valeur usuelle d'un moteur normalisé 4 pôles en tension 400 V en classe 10 (pour ATS 48•••Q).
Réglage usine de In2 correspondant à la valeur usuelle d'un moteur normalisé suivant NEC en tension 460 V, en classe 10 (pour ATS 48•••Y).

Code	Description	Plage de réglage	Préréglage usine
tq2	**Couple initial de décollage**	0 à 100 % de Cn	20 %
	Réglage du couple initial lors des phases de démarrage, varie de 0 à 100 % du couple nominal. 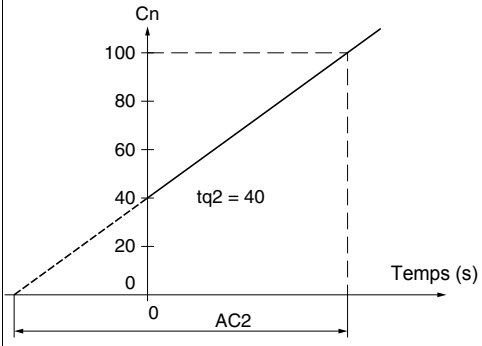		
dE2	**Temps de rampe de décélération**	1 à 60 s	15 s
	Ce paramètre n'est accessible que si StY = -d-. Permet de régler un temps compris entre 1 à 60 s, pour passer du couple estimé au couple nul (= pente de la rampe de décroissance de couple lors d'un arrêt -d-). Ceci adapte la progressivité de la décélération et évite les chocs hydrauliques sur les applications pompe par une modification de la pente de la référence couple. 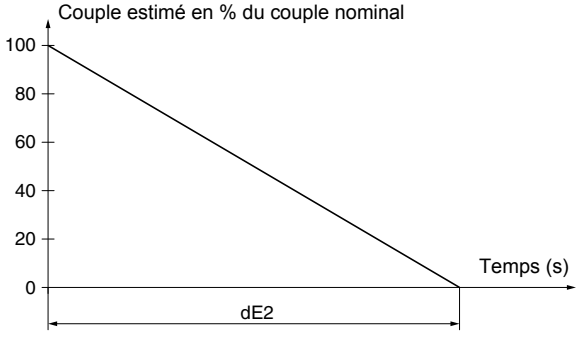		

Code	Description	Plage de réglage	Préréglage usine
Ed2	**Seuil de passage en roue libre en fin de décélération**	0 à 100 %	20 %
	Ce paramètre n'est accessible que si StY = -d- et si le paramètre CLP du menu entraînement (drC) est resté en préréglage usine (On). Permet de régler le niveau du couple final compris entre 0 et 100 % du couple estimé en début de décélération. Dans les applications du type pompe, le contrôle de la décélération n'est pas nécessairement en dessous d'un niveau de charge réglé par Ed2. Si le couple estimé en début de décélération est en dessous de 20, c'est-à-dire 20 % du couple nominal, la décélération contrôlée n'est pas activée, passage en roue libre. 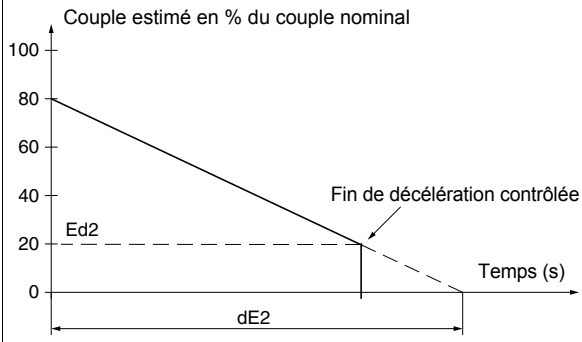 		
tL2	**Limitation du couple maximal.**	10 à 200 % ou OFF	OFF
	Permet d'écrêter la référence couple pour éviter des passages en hypersynchrone sur des applications à forte inertie. Permet un démarrage à couple constant si tq2 = tL2. - OFF : pas de limitation - 10 à 200 : réglage de la limitation en % du couple nominal		
tI2	**Gain en décélération** (pour commande en couple).	10 à 50 %	40 %
	Ce paramètre n'est accessible que si CLP = On et si le paramètre StY (menu réglages SEt) = -d-. Permet d'éliminer les instabilités en décélération. Ajuster en plus ou moins en fonction des oscillations.		

Menu Communication COP

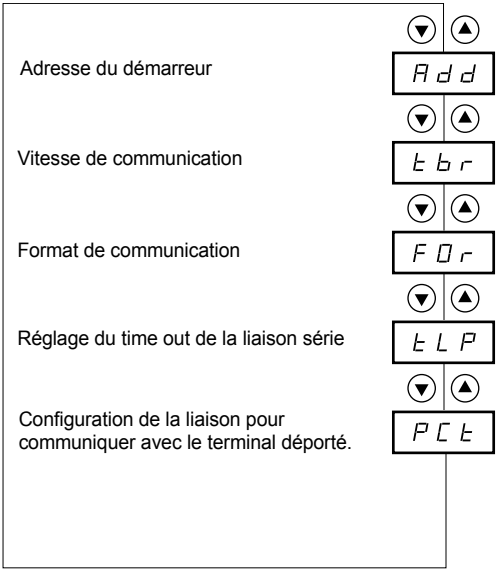

Paramètres dans menu

Menu Communication COP

La modification des paramètres du menu Communication n'est possible qu'à l'arrêt.
Le protocole utilisé en interne est Modbus.

Code	Description	Plage de réglage	Préréglage usine
Add	**Adresse du démarreur** par la liaison série RS485.	0 à 31	0
tbr	**Vitesse de communication** en kilobits par seconde.	4,8 - 9,6 - 19,2	19,2
FOr	**Format de communication** 8o1 : 8 bits de données, parité impaire, 1 bit de stop 8E1 : 8 bits de données, parité paire, 1 bit de stop 8n1 : 8 bits de données, sans parité, 1 bit de stop 8n2 : 8 bits de données, sans parité, 2 bits de stop		8n1
tLP	**Réglage du time out de la liaison série** (1)	0,1 à 60 s	5 s
PCt	**Configuration de la liaison série pour communiquer avec le terminal déporté** On : fonction active. Configure temporairement le démarreur (tbr et FOr) pour communiquer avec le terminal déporté, à utiliser dans le cas ou tbr et FOr ne sont pas à la valeur par défaut. OFF : fonction configuration temporaire inactive. **PCT revient à l'état OFF dés la coupure de la tension contrôle. A la remise sous-tension suivante les paramètres tbr et FOr retrouvent leur configuration initiale.**		OFF

(1) S'assurer que le temps réglé est compatible avec la sécurité de fonctionnement de la machine

Menu Paramètre visualisé SUP

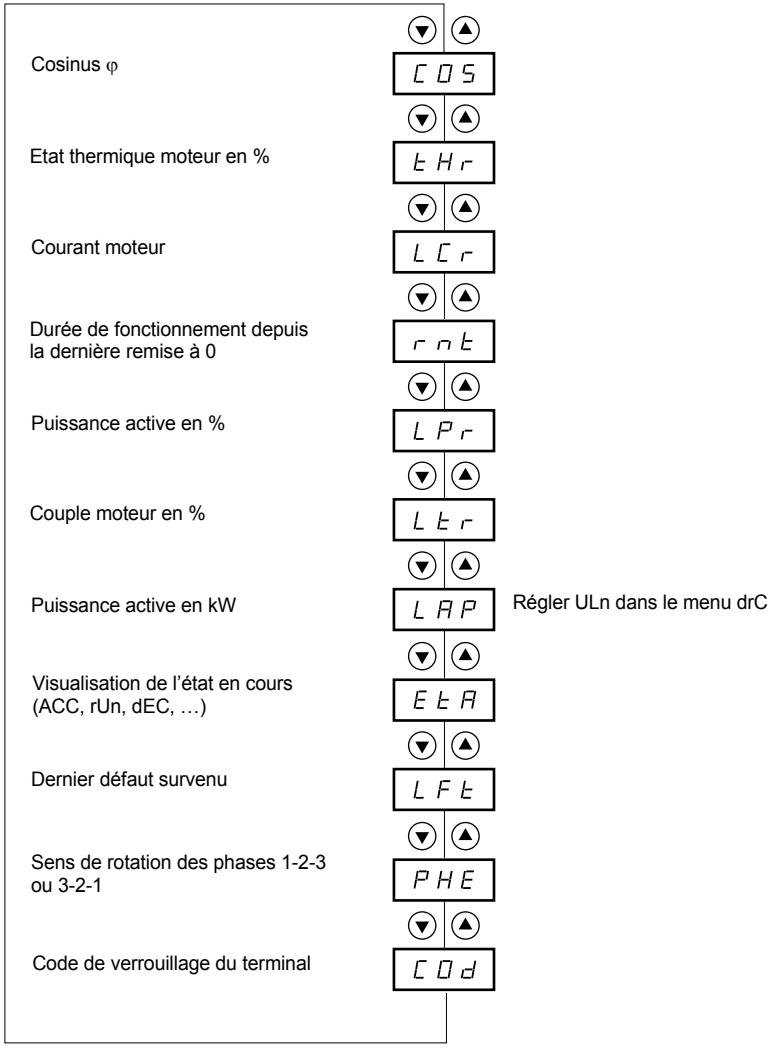

Menu Paramètre visualisé SUP

La modification du paramètre à visualiser est possible à l'arrêt ou en fonctionnement.
En réglage usine le courant moteur est affiché (paramètre LCr).
L'affichage choisi est enregistré par :
- 1er appui sur la touche ENT : le choix est provisoire, il sera effacé à la prochaine mise hors tension.
- 2ème appui sur la touche ENT pendant 2 secondes : l'affichage clignote, le choix est définitif sauf modification.

Code	Paramètre	Unité
COS	**Cosinus** φ	0,01
tHr	**Etat thermique moteur** Varie de 0 à 125 % 100 % correspond à l'état thermique nominal pour le courant In réglé.	%
LCr	**Courant moteur** En ampères jusqu'à 999 A (exemples : 01.5 = 1,5 A ; 15.0 = 15 A ; 150 = 150 A) En kilo-ampères à partir de 1000 A (exemples : 1.50 = 1500 A ; 1.15 = 1150 A)	A ou kA
rnt	**Durée de fonctionnement** en heures depuis la dernière remise à zéro. En heures jusqu'à 999 h (exemples : 001 = 1 h ; 111 = 111 h) En kilo-heures de 1000 à 65535 (exemples : 1.11 = 1110 h ; 11.1 = 11100 h) Au delà de 65535 h (65.5) l'affichage est remis à zéro Le temps de fonctionnement est compté lorsque le moteur n'est pas à l'arrêt, c'est à dire lorsqu'on amorce les thyristors (chauffage, accélération, régime permanent, décélération, freinage) et en régime permanent court-circuité. La remise à zéro du compteur d'heures peut s'effectuer en ligne par le mot de commande et par le terminal à l'arrêt. A la mise hors tension du contrôle le compteur d'heures est sauvegardé en EEPROM.	h ou kh
LPr	**Puissance active** Varie de 0 à 255 % 100 % correspondant à la puissance au courant nominal et à la pleine tension.	%
Ltr	**Couple moteur** Varie de 0 à 255 % 100 % correspond au couple nominal.	%
LAP	**Puissance active en kW** Ce paramètre nécessite de configurer la valeur exacte de la tension réseau ULn dans le menu drC.	kW
EtA	**Visualisation de l'état en cours** - nLP : démarreur sans ordre de marche et puissance non alimentée - rdY : démarreur sans ordre de marche et puissance alimentée - tbS : temporisation de démarrage non écoulée - ACC : accélération en cours - dEC : décélération en cours - rUn : marche en régime établi - brL : freinage en cours - CLI : démarreur en limitation de courant - nSt : forçage arrêt roue libre via la liaison série	
LFt	**Dernier défaut apparu** (page 77). Lorsqu'aucun défaut n'a été mémorisé, l'afficheur indique nOF. Lorsque les défauts ont été inhibés, l'afficheur affiche**InH**.	
PHE	**Sens de rotation des phases** vues du démarreur - 123 : sens direct (L1-L2-L3) - 321 : sens inverse (L3-L2-L1)	

Menu Paramètre visualisé SUP

Code	Paramètre
COd	**Code de verrouillage du terminal** Permet de protéger la configuration du démarreur par un code d'accès. **Attention : Avant d'entrer un code, ne pas oublier de le noter soigneusement** • **OFF** : aucun code ne verrouille l'accès - Pour verrouiller l'accès, composer un code (2 à 999) en incrémentant l'affichage par ▲ puis appuyer sur ENT. "On" s'affiche alors, l'accès au paramètre est verrouillé. • **On** : un code verrouille l'accès (2 à 999) - **Pour déverrouiller l'accès**, composer le code en incrémentant l'affichage par ▲ puis appuyer sur ENT. Le code reste alors affiché, l'accès est déverrouillé jusqu'à la prochaine mise hors tension. A la remise sous tension suivante l'accès au paramètre redevient verrouillé. - **Si on entre un code erroné**, l'affichage repasse à "On", l'accès au paramètre reste verrouillé. • **XXX** : l'accès au paramètre est déverrouillé (le code reste affiché). - **Pour réactiver le verrouillage avec le même code**, l'accès au paramètre étant déverrouillé, revenir à "On" par la touche ▼, puis appuyer sur ENT. "On" reste affiché, l'accès au paramètre est verrouillé. - **Pour verrouiller l'accès avec un nouveau code**, l'accès au paramètre étant déverrouillé, composer le nouveau code en incrémentant l'affichage par ▲ ou ▼ puis appuyer sur ENT. "On" s'affiche alors, l'accès au paramètre est verrouillé. - **Pour supprimer le verrouillage**, l'accès au paramètre étant déverrouillé, revenir à "OFF" par la touche ▼, puis appuyer sur ENT. "OFF" reste affiché, l'accès au paramètre est déverrouillé et le reste même après mise hors puis sous tension.

Lorsque l'accès est verrouillé par un code, seuls les paramètres de surveillance sont accessibles, avec choix provisoire du paramètre affiché uniquement.

Tableau de compatibilité

Le choix des fonctions d'application peut être limité par l'incomptaibilité de certaines fonctions entre elles. Les fonctions qui ne sont pas listées dans ce tableau ne font l'objet d'aucune incompatibilité.

Fonctions	Arrêt en décélération	Arrêt en freinage dynamique	Forçage arrêt roue libre	Protection thermique	Perte d'une phase moteur	Câblage dans l'enroulement triangle du moteur	Essais sur petit moteur	Cascade	Préchauffage
Arrêt en décélération									
Arrêt en freinage dynamique									
Forçage arrêt roue libre									
Protection thermique									**(2)**
Perte d'une phase moteur									
Câblage dans l'enroulement triangle du moteur									
Essais sur petit moteur									
Cascade									
Préchauffage				**(2)**					

Fonctions compatibles
Fonctions incompatibles
Sans objet

(1) Perte d'une phase moteur non détectée

(2) Pendant le préchauffage moteur, la protection thermique n'est pas assurée. Régler correctement le courant de préchauffage IPr

Entretien

L'Altistart 48 ne nécessite pas d'entretien préventif. Il est néanmoins conseillé à intervalles réguliers de :
- vérifier l'état et le serrage des connexions
- s'assurer que la température au voisinage de l'appareil reste à un niveau acceptable et que la ventilation reste efficace (durée de vie moyenne des ventilateurs : 3 à 5 ans selon les conditions d'exploitation)
- dépoussiérer le refroidisseur si nécessaire

Assistance à la maintenance

En cas d'anomalie à la mise en service ou en exploitation, s'assurer tout d'abord que les recommandations relatives à l'environnement, au montage et aux raccordements ont été respectées.

Le premier défaut détecté est mémorisé et affiché sur l'écran : le démarreur se verrouille, et les relais R1 et R2 changent d'état, selon leur affectation.

Effacement du défaut

Couper l'alimentation contrôle du démarreur en cas de défaut non réarmable.
Attendre l'extinction totale de l'afficheur.
Rechercher la cause du défaut pour l'éliminer.
Rétablir l'alimentation : ceci a pour effet d'effacer le défaut si celui-ci a disparu.

Dans certains cas, il peut y avoir redémarrage automatique après disparition du défaut, si cette fonction a été programmée.

Menu surveillance

Il permet la prévention et la recherche des causes de défauts par affichage de l'état du démarreur et de ses valeurs courantes.

Rechanges et réparations

Consulter les services de Schneider Electric.Il permet la prévention et la recherche des causes de défauts par affichage de l'état du démarreur et de ses valeurs courantes.

Défauts - causes - remèdes

En règle générale, quand il y a une anomalie à la mise en route du démarreur, il est préférable de faire un réglage usine et de refaire les réglages étape par étape.

Non démarrage sans affichage de défaut

- Pas d'affichage : vérifier la présence réseau sur l'alimentation contrôle CL1/CL2 (page 29)
- Vérifier que le code affiché ne correspond pas à l'état normal du démarreur (page 47)
- Vérifier la présence des ordres de marche RUN/STOP (page 30)

Défauts non réarmables

Lorsque ce type de défaut apparaît, le démarreur se verrouille, le moteur passe en roue libre.

Signalisation :
- Ouverture du relais fin de démarrage R2
- Ouverture du relais R1 (suite au verrouillage du démarreur)
- Clignotement du code défaut sur l'afficheur
- Mémorisation des 5 derniers défauts, visibles avec l'atelier logiciel PowerSuite

Conditions de redémarrage :
- Disparition des causes du défaut
- Coupure puis rétablissement de l'alimentation contrôle

Défaut affiché	Cause probable	Procédure, remède
InF	**Défaut interne**	Couper puis rétablir l'alimentation contrôle. Si le défaut persiste faire appel aux services Schneider Electric.
OCF	**Surintensité :** • court-circuit impédant en sortie du démarreur • court-circuit interne • contacteur de court-circuitage collé • surclassement démarreur	Mettre le démarreur hors tension. • Vérifier les câbles de liaison et l'isolement moteur • Vérifier les thyristors • vérifier le contacteur de court-circuitage (contact collé) • Vérifier la valeur du paramètre bSt dans le menu drC page .
PIF	**Inversion de phases.** La rotation des phases du réseau n'est pas concordante avec la sélection faite par PHr dans le menu Protection.	Inverser deux phases du réseau ou mettre PHr = no
EEF	**Défaut mémoire interne**	Couper puis rétablir l'alimentation contrôle. Si le défaut persiste faire appel aux services Schneider Electric.

Défauts réarmables spontanément à la disparition de leurs causes

Lorsque ce type de défaut apparaît, le démarreur se verrouille, le moteur passe en roue libre.

Signalisation :
- Ouverture du relais fin de démarrage R2
- Ouverture du relais R1, seulement s'il est configuré en relais d'isolement
- Clignotement du code défaut sur l'afficheur, tout le temps de la présence du défaut
- Mémorisation des 5 derniers défauts, visibles avec l'atelier logiciel PowerSuite

Conditions de redémarrage :
- Disparition des causes du défaut
- En commande 2 fils, il faut que l'ordre de marche soit maintenu sur l'entrée RUN
- En commande 3 fils, il faut un nouvel ordre de marche (front montant) sur l'entrée RUN

Défaut affiché	Cause probable	Procédure, remède
CFF	**Configuration invalide** à la mise sous tension.	• Faire un retour au réglage usine dans le menu entraînement drC. • Reconfigurer le démarreur.
CFI	**Configuration invalide** La configuration chargée dans le démarreur par liaison série est incohérente.	• Vérifier la configuration précédemment chargée. • Charger une configuration cohérente

Défauts réarmables manuellement pouvant faire l'objet d'un redémarrage automatique (1)

Lorsque ce type de défaut apparaît, le démarreur se verrouille, le moteur passe en roue libre.

Signalisation avec redémarrage automatique :
- Ouverture du relais fin de démarrage R2.
- Ouverture du relais R1, seulement s'il est configuré en relais d'isolement. R1 reste fermé s'il est configuré en relais de défaut, page 64.
- Clignotement du code défaut sur l'afficheur, tout le temps de la présence du défaut.
- Mémorisation des 5 derniers défauts, visibles avec l'atelier logiciel PowerSuite.

Conditions de redémarrage pour les défauts suivants avec un redémarrage automatique (en commande 2 fils uniquement) :
- Disparition des causes du défaut.
- Ordre de marche maintenu sur l'entrée RUN.
- 6 tentatives de redémarrage espacées de 60 secondes chacune sont effectuées. A la sixième, si le défaut est toujours présent, il devient un défaut réarmable manuellement (voir page suivante) et R1 s'ouvre s'il est configuré en relais de défaut.

Défaut affiché	Cause probable	Procédure, remède
FrF (2)	**Fréquence réseau hors tolérance.** Ce défaut est configurable dans le menu Réglages avancés drC, paramètre FrC.	• Vérifier le réseau. • Vérifier que la configuration du paramètre FrC est compatible avec le réseau utilisé (groupe électrogène par exemple).
PHF (3)	**Perte d'une phase réseau**	• Vérifier le réseau, la stabilité du réseau, le raccordement du démarreur, et les appareils de séparation éventuellement situés entre le réseau et le démarreur (contacteur, fusibles, disjoncteur,...). • Si le relais de court-circuit est utilisé, vérifier la mécanique (usure, dur mécanique, lubrification, obstacle ...)
	Perte d'une phase moteur Si le courant moteur devient inférieur à un seuil réglable PHL dans une phase pendant 0,5 s ou dans les trois phases pendant 0,2 s. Ce défaut est configurable dans le menu protection PrO, paramètre PHL.	• Vérifier le raccordement du moteur (bornes T1, T2, T3), et les appareils de séparation situés éventuellement entre le démarreur et le moteur (contacteurs, disjoncteurs,...). • Vérifier l'état du moteur. • Vérifier que la configuration du paramètre PHL est compatible avec le moteur utilisé.

(1) Si la fonction redémarrage automatique n'est pas sélectionnée, page 81 pour la signalisation et conditions de redémarrage de ces défauts
(2) Apres chaque demarrage de l'alimentation la detection sur FrF est faites seulement au premier demarrage de l'allimentation.
(3) Pour les prochaine mise sous tension de l'alimentation principale, une mauvaise fréquence peux générer le defaut PHF de désynchronisation.

Défauts réarmables manuellement pouvant faire l'objet d'un redémarrage automatique (1)

Lorsque ce type de défaut apparaît, le démarreur se verrouille, le moteur passe en roue libre.

Signalisation avec redémarrage automatique :
- Ouverture du relais fin de démarrage R2.
- Ouverture du relais R1, seulement s'il est configuré en relais d'isolement. R1 reste fermé s'il est configuré en relais de défaut, page 64.
- Clignotement du code défaut sur l'afficheur, tout le temps de la présence du défaut.
- Mémorisation des 5 derniers défauts, visibles avec l'atelier logiciel PowerSuite.

Conditions de redémarrage pour les défauts suivants :
- Disparition des causes du défaut
- Ordre de marche maintenu (commande 2 fils seulement)

Défaut affiché	Cause probable	Procédure, remède
USF	**Défaut d'alimentation puissance** lors d'un ordre de marche.	• Vérifier la tension et le circuit d'alimentation puissance.
CLF	Perte alimentation contrôle	• Coupure supérieure à 200 ms sur CL1/CL2

(1) Si la fonction redémarrage automatique n'est pas sélectionnée, page 81 pour la signalisation et conditions de redémarrage de ces défauts

Défauts réarmables manuellement uniquement

Lorsque ce type de défaut apparaît, le démarreur se verrouille, le moteur passe en roue libre.

Signalisation :
- Ouverture du relais fin de démarrage R2.
- Ouverture du relais R1.
- Clignotement du code défaut sur l'afficheur, tout le temps de la présence du défaut.
- Mémorisation des 5 derniers défauts, visibles avec l'atelier logiciel PowerSuite.

Conditions de redémarrage :
- Disparition des causes du défaut.
- Un ordre de marche (commande 2 fils ou 3 fils, nécessite un front montant sur l'entrée RUN) pour réarmer le défaut (1).
- Un autre ordre de marche (commande 2 fils ou 3 fils, nécessite un front montant sur l'entrée RUN) pour démarrer le moteur.

Défaut affiché	Cause probable	Procédure, remède
SLF	**Défaut liaison série**	• Vérifier le raccordement de la prise RS485.
EtF	**Défaut externe**	• Vérifier le défaut pris en compte.
StF	**Démarrage trop long**	• Vérifier la mécanique (usure, dur mécanique, lubrification, obstacle,...). • Vérifier la valeur du réglage tLS dans le Menu PrO 55. • Vérifier le dimensionnement démarreur-moteur par rapport au besoin mécanique.
OLC	**Surcharge courant.**	• Vérifier la mécanique (usure, dur mécanique, lubrification, obstacle,...). • Vérifier la valeur des paramètres LOC et tOL dans le menu PrO 56.
OLF	**Défaut thermique moteur.**	• Vérifier la mécanique (usure, dur mécanique, lubrification, obstacle,...). • Vérifier le dimensionnement démarreur-moteur par rapport au besoin mécanique. • Vérifier la valeur du paramètre tHP dans le Menu PrO 55 et celle du paramètre In dans le Menu SEt 50. • Vérifier le bon isolement électrique du moteur. • Attendre le refroidissement du moteur avant de redémarrer.
OHF	**Défaut thermique démarreur.**	• Vérifier la mécanique (usure, dur mécanique, lubrification, obstacle,...). • Vérifier le dimensionnement du démarreur par rapport au moteur et au besoin mécanique. • Vérifier le fonctionnement du ventilateur si l'ATS48 utilisé en est équipé, ainsi que le libre passage de l'air et la propreté du radiateur. S'assurer que les précautions de montage sont respectées. • Attendre le refroidissement de l'ATS48 avant de redémarrer.

(1) Le réarmement sur un ordre de marche est inactif si LI est affectée à la fonction "réarmement défaut (LIr)".

Défauts réarmables manuellement uniquement

Défaut affiché	Cause probable	Procédure, remède
OtF	**Défaut thermique moteur détecté par les sondes PTC.**	• Vérifier la mécanique (usure, dur mécanique, lubrification, obstacle,...). • Vérifier le dimensionnement démarreur- moteur par rapport au besoin mécanique. • Vérifier la valeur du paramètre PtC dans le Menu PrO 57. • Attendre le refroidissement du moteur avant de redémarrer.
ULF	**Sous-charge moteur.**	• Vérifier le circuit hydraulique. • Vérifier la valeur des paramètres LUL et tUL dans le menu protection PrO 55.
LrF	**Rotor bloqué** en régime permanent. Ce défaut est actif uniquement en régime permanent avec contacteur de court-circuitage démarreur. Il est détecté si le courant dans une phase est supérieur ou égal à 5 In pendant plus de 0,2 s.	• Vérifier la mécanique (usure, dur mécanique, lubrification, obstacle,...).
Err1	Possible seulement sur le terminal déporté : Valeurs incorrectes de tbr et FOr	• Configurer tbr = 19,2 et FOr = 8n1 ou PCt = On (voir page 71)

Réarmement des défauts par une entrée logique

Si une entrée logique LI est configurée en "Réarmement du défaut thermique moteur" ou en "Réarmement des défauts réarmables", il faut :
- Une impulsion sur l'entrée logique LI
- En commande 2 fils, le moteur redémarre si l'ordre de marche est maintenu sur l'entrée RUN
- En commande 3 fils, le moteur redémarre sur un nouvel ordre de marche (front montant) sur l'entrée RUN

Tableaux de mémorisation configuration/réglages

Démarreur ATS 48.....
n° identification client éventuel.....
Code d'accès éventuel.....

Menu Réglages SEt

Code	Réglage usine	Réglage client	Code	Réglage usine	Réglage client
In	(1)		dEC	15 s	
ILt	400 %		EdC	20 %	
ACC	15 s		brC	50 %	
t90	20 %		EbA	20 %	
StY	-F-				

Les paramètres grisés apparaissent si les fonctions correspondantes ont été configurées.

Menu Protection PrO

Code	Réglage usine	Réglage client	Code	Réglage usine	Réglage client
tHP	10		tOL	10,0	
ULL	OFF		PHr	no	
LUL	60 %		tbS	2 s	
tUL	60 %		PHL	10 %	
tLS	OFF		PtC	OFF	
OIL	OFF		ArS	OFF	
LOC	80 %		rtH	no	

Les paramètres grisés apparaissent si les fonctions correspondantes ont été configurées.

(1) Dépend du calibre du démarreur.

Tableaux de mémorisation configuration/réglages

Menu Réglages avancés drC

Code	Réglage usine	Réglage client	Code	Réglage usine	Réglage client
tLI	OFF		LSC	50 %	
bSt	OFF		t IG	40 %	
dLt	OFF		CSC	OFF	
SSt	OFF		ULn	(1)	
CLP	On		FrC	AUt	

Les paramètres grisés apparaissent si les fonctions correspondantes ont été configurées.

Menu Affectation des entrées / sorties IO

Code	Réglage usine	Réglage client	Code	Réglage usine	Réglage client
LI3	LIA		r1	r1I	
LI4	LIL		r3	rn1	
IPr	0 %		AO	OCr	
tPr	5 mn		O 4	020	
LO1	tA1		ASC	200	
LO2	rn1				

Les paramètres grisés apparaissent si les fonctions correspondantes ont été configurées.

(1) -ATS 48•••Q : 400 V
-ATS 48•••Y : 460 V

Tableaux de mémorisation configuration/réglages

Menu Paramètres 2ème moteur St2

Ce menu n'est visible que si une entrée logique est affectée à la fonction activation du second jeu de paramètres moteur (LIS) dans le menu Affectation des entrées / sorties I O.

Code	Réglage usine	Réglage client	Code	Réglage usine	Réglage client
In2	(1)		dE2	15 s	
IL2	400 %		Ed2	20 %	
AC2	15 s		tL2	OFF	
t92	20 %		t I2	40 %	

Menu Communication COP

Code	Réglage usine	Réglage client	Code	Réglage usine	Réglage client
Add	0		tLP	5 s	
tbr	19,2 kBits / s		PCt	OFF	
FOr	8n1				

(1) Dépend du calibre du démarreur.

As a rule, the Altistart 48 control (CL1 - CL2) and power (1/L1 - 3/L2 - 5/L3) supplies must be disconnected before any operation on either the electrical or mechanical parts of the installation or machine.
During operation the motor can be stopped by cancelling the run command. The starter remains powered up. If personnel safety requires prevention of sudden restarts, this electronic locking system is not sufficient: fit a breaker on the power circuit.

The starter is fitted with safety devices which, in the event of a fault, can stop the starter and consequently the motor. The motor itself may be stopped by a mechanical blockage. Finally, voltage variations or line supply failures can also cause shutdowns.
If the cause of the shutdown disappears, there is a risk of restarting which may endanger certain machines or installations, especially those which must conform to safety regulations.
In this case the user must take precautions against the possibility of restarts, in particular by using a low speed detector to cut off power to the starter if the motor performs an unprogrammed shutdown.

The products and equipment described in this document may be changed or modified at any time, either from a technical point of view or in the way they are operated. Their description can in no way be considered contractual.

This starter must be installed and set up in accordance with both international and national standards. Bringing the device into conformity is the responsibility of the systems integrator who must observe the EMC directive among others within the European Union.
The specifications contained in this document must be applied in order to comply with the essential requirements of the EMC directive.

The Altistart 48 must be considered as a component: it is neither a machine nor a device ready for use in accordance with European directives (machinery directive and electromagnetic compatibility directive). It is the responsibility of the final integrator to guarantee conformity to the relevant standards.

Contents

Steps for setting up the starter 88
Factory configuration 90
Preliminary recommendations 91
Technical specifications 92
Operating recommendations 93
Starter-motor combi nations 96
Dimensions 102
Mounting recommendations 104
Mounting in a wall-fixing or floor-standing enclosure 105
Power terminals 106
Control terminals 111
Wiring/RUN - STOP commands 112
Application diagram 113
Thermal protection 123
Display unit and programming 127
Remote terminal option 130
Settings menu (Set) 131
Protection menu (PrO) 136
Advanced settings menu (drC) 140
I/O menu (IO) 144
2nd motor parameters menu (St2) 148
Communication menu (COP) 152
Parameter displayed menu (SUP) 154
Compability table 157
Maintenance 158
Faults - causes - remedies 159
Configuration/Settings tables 165

Steps for setting up the starter

1 - Check the delivery of the Altistart 48

- Check that the starter reference printed on the label is the same as that on the delivery note corresponding to the purchase order.
- Remove the Altistart 48 from its packaging and check that it has not been damaged in transit.

> **⚠ WARNING**
>
> **DAMAGED SOFT STARTER EQUIPMENT**
>
> Do not operate or install any soft starter or soft starter accessory that appears damaged.
>
> **Failure to follow these instructions can result in death, serious injury or equipment damage.**

2 - Mount the soft starter vertically

- Fit the Altistart 48 in accordance with the recommendations **on page 104 and page 105.**

3 - Connect the Altistart 48:

- Wire the soft starter to the ground.
- The control line supply (CL1 – CL2), ensuring that it is off
- The power line supply (1/L1 - 3/L2 - 5/L3), ensuring that it is off
- The motor (2/T1 - 4/T2 - 6/T3), ensuring that its coupling corresponds to the supply voltage

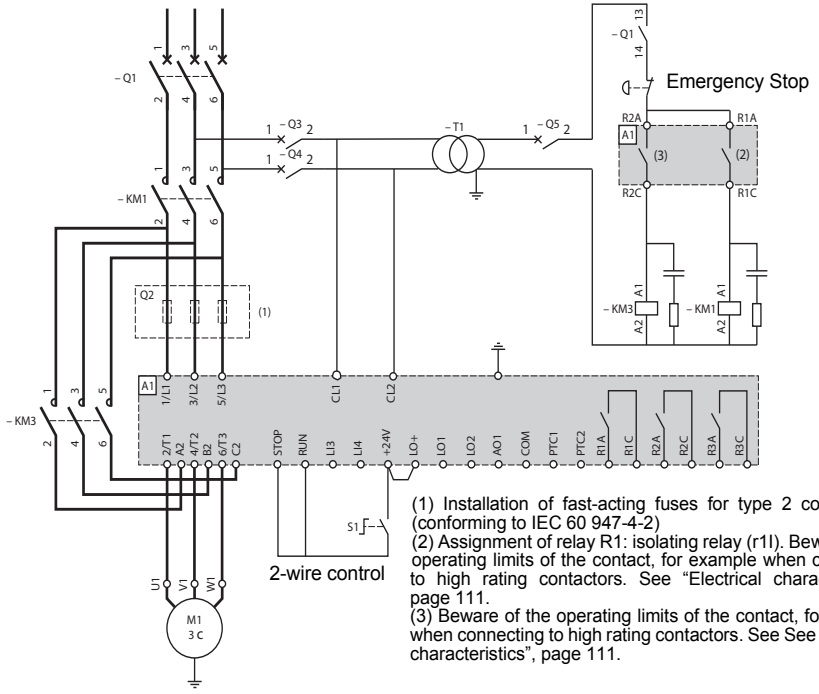

(1) Installation of fast-acting fuses for type 2 coordination (conforming to IEC 60 947-4-2)
(2) Assignment of relay R1: isolating relay (r1I). Beware of the operating limits of the contact, for example when connecting to high rating contactors. See “Electrical characteristics”, page 111.
(3) Beware of the operating limits of the contact, for example when connecting to high rating contactors. See See “Electrical characteristics”, page 111.

Note: For other wiring diagrams, **see page 113 to page 117**.
If the ATS48●●●Q / ATS48●●●YS316 is used in the motor delta windings, follow the recommendations **on page 94, page 95** and the diagrams **on page 115**.

4 - Powering up the control part (CL1-CL2)

- Powering up without the power part and without giving the run command.
- Check that S1 is open.
- Switch on: Q1, then Q3, then Q4.
- The starter displays: nLP (to indicate that the power is switched off).

CAUTION

RISK OF DAMAGE TO THE SOFT STARTER

- Check the power supply on CL1 - CL2:
  ATS48●●●Q must be 220 - 415 V AC
  ATS48●●●Y must be 110 - 230 V AC

Failure to follow these instructions can result in equipment damage

5 - Adjust In nominal motor current

- See Nominal Motor Current on Motor Nameplate

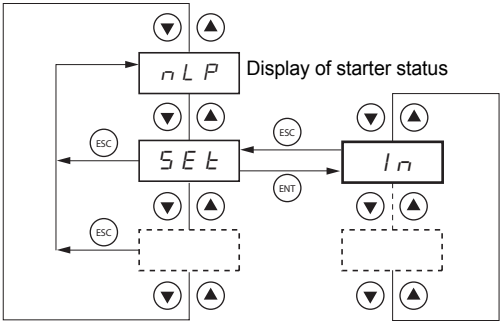

6 - Powering up the power part (1/L1 - 3/L2 - 5/L3)

- Switch on: Q5.
- The soft starter displays: rdy (to indicate that the starter is powered up and ready).

7 - Start the motor

- Push S1, the motor starts

8 - Troubleshooting information

- See Faults - causes - remedies **page 159**

CAUTION

MOTOR OVERHEATING HAZARD

The ATS 48 starter is factory-configured for a standard application which does not require specific functions. It has motor protection class 10.
The settings can be changed by accessing the parameters as described **on page 128.**
In all cases the In parameter must be set to the current value indicated on the motor rating plate.
Failure to follow these instructions can result in equipment damage

Factory configuration

Factory settings

The Altistart 48 is factory-set for the most common operating conditions:

- The ATS 48 is used on the motor line supply (it is not inserted as a delta connection in the motor windings)
- Nominal motor current In:
  - ATS 48 •••Q: preset for a standard 400 V 4-pole motor
  - ATS 48 •••Y: preset for NEC current, 460 V motor
- Limiting current (ILt): 400% of the motor current In
- Acceleration ramp (ACC): 15 seconds
- Initial torque on starting (tq0): 20% of the nominal torque
- Stop (StY): Freewheel stop (-F-)
- Motor thermal protection (tHP): class 10 protection curve
- Display: rdY (starter ready) with power and control voltage present, motor current operating
- Logic inputs:
  - LI1: STOP
  - LI2: RUN
  - LI3: Forced freewheel stop (LIA)
  - LI4: Forced local mode (LIL)
- Logic outputs:
  - LO1: Motor thermal alarm (tA1)
  - LO2: Motor powered (mI)
- Relay outputs:
  - R1: Fault relay (r1I)
  - R2: Bypass relay at the end of starting
  - R3: Motor powered (mI)
- Analog output:
  - AO: Motor current (OCr, 0 - 20 mA)
- Communication parameters:
  - Connected via the serial link, the starter has the logic address (Add) = "0"
  - Transmission speed (tbr): 19200 bits per second
  - Communication format (FOr): 8 bits, no parity, 1 stop bit (8nI)

If the above values are compatible with the application, the starter can be used without changing the settings.

Preliminary recommendations

Handling and storage

To ensure the starter is protected before installation, handle and store the device in its packaging.

Handling on installation

The Altistart 48 range comprises 6 sizes of device, with various weights and dimensions.

Small starters can be removed from their packaging and installed without a handling device.

A handling device must be used with large starters; for this reason they are supplied with handling "lugs". The precautions described below must be observed:

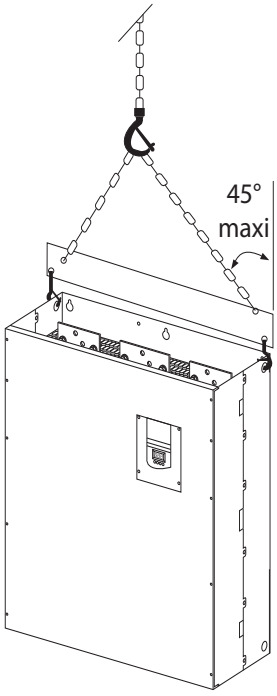

Do not handle the starter by the power rails

Technical specifications

Environment

Degree of protection	• IP 20 for ATS 48D17• to C11• • IP00 for ATS 48C14• to M12• (1)
Vibration resistance	Conforming to IEC 68-2-6: • 1.5 mm peak from 2 to 13 Hz • 1 gn from 13 to 200 Hz
Shock resistance	Conforming to IEC 68-2-27: • 15 g, 11 ms
Maximum ambient pollution	Degree 3 conforming to IEC 947-4-2
Maximum relative humidity	93% without condensation or dripping water conforming to IEC 68-2-3
Ambient temperature around the unit	Storage: - 25 °C to + 70 °C Operation: • - 10 °C to + 40 °C without derating • up to +60 °C, derating the current by 2% for each °C above 40 °C
Maximum operating altitude	1000 m without derating (above this, derate the current by 2 % for each additional 100 m)
Operating position	Vertical at ± 10°

(1) ATS 48 starters with degree of protection IP00 must be fitted with a protective bar to protect personnel against electrical contact

Available torque

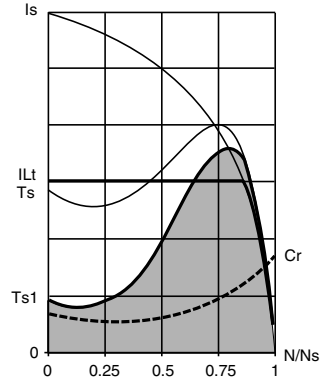

Curves Ts and Is represent the direct line starting of an asynchronous motor.

Curve Ta1 indicates the total torque range available with an ATS 48, which is dependent on the limiting current ILt. The progression of the starter is controlled by the motor torque within this range.

Tr: Resistive torque, which must always be less than the Ts1 torque.

Selecting the soft start - soft stop unit

S1 motor duty corresponds to starting followed by operation at constant load enabling the thermal equilibrium to be reached.
S4 motor duty corresponds to a cycle comprising starting, operation at constant load and an idle period. This cycle is characterised by a load factor.

The Altistart 48 must be selected depending on the type of application ("standard" or "severe") and the nominal power of the motor. "Standard" or "severe" applications define the limiting values of the current and the cycle for motor duties S1 and S4.

Caution: Do not use the Altistart 48 upstream of loads other than motors (for example transformers and resistors are forbidden). Do not connect power factor correction capacitors to the terminals of a motor controlled by an Altistart 48

Standard application

Example: centrifugal pump
In standard applications, the Altistart 48 is designed to provide:
- in S1 duty: starting at 4 In for 23 seconds or starting at 3 In for 46 seconds from a cold state.
- in S4 duty: a load factor of 50% and 10 starts per hour, with 3 In for 23 seconds or 4 In for 12 seconds or an equivalent thermal cycle.

In this case, the motor thermal protection must conform to protection class 10.

Severe application

Example: grinder
In severe applications, the Altistart 48 is designed for S4 duty with a load factor of 50% and 5 starts per hour at 4 In for 23 seconds or an equivalent thermal cycle.
In this case, the motor thermal protection must conform to protection class 20. Current **In must not remain at its factory setting** but must be set to the value indicated on the motor rating plate.

Note: The starter can be oversized by one rating, for example by selecting an ATS 48D17Q for an 11 kW - 400 V motor in motor duty S4.
To do this, short-circuit the Altistart at the end of starting. This permits 10 starts per hour at 3 times In for 23 seconds maximum or equivalent and the thermal motor protection must conform to class 10.

The Altistart 48 Q range (230-415 V) connected in line with the motor or in the motor delta winding

The Altistart 48 connected in the motor supply line

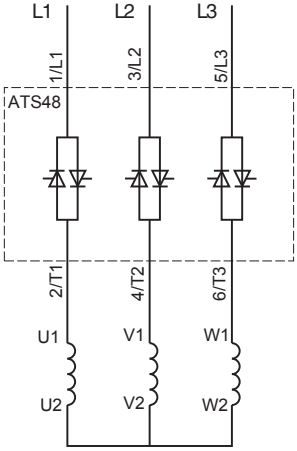

The motor connection depends on the supply voltage, **which in this example is a star connection.**

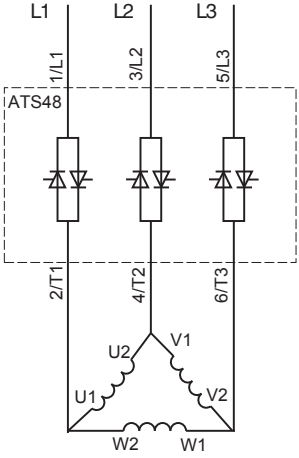

The motor connection depends on the supply voltage, **which in this example is a delta connection.**

See application diagram **page 114**

The Altistart 48 connected in the motor delta winding in series with each winding

ATS48●●●Q or ATS48●●●YS316 starters connected to motors with delta connections can be inserted in series in the motor windings. They are powered by a current which is less than the line current by a factor of √3, which enables a starter with a lower rating to be used.

Note: This option can be configured in the Advanced settings menu (dLt = On).
The nominal current and limiting current settings as well as the current displayed during operation are on-line values and so do not have to be calculated by the user.

The Altistart 48 can only be connected in the motor delta winding for ATS48●●●Q or ATS48●●●YS316 starters. This means that:
- dynamic braking stop is not possible
- cascading is not possible
- preheating is not possible

See the tables on page 96 for more information about starter-motor combinations.

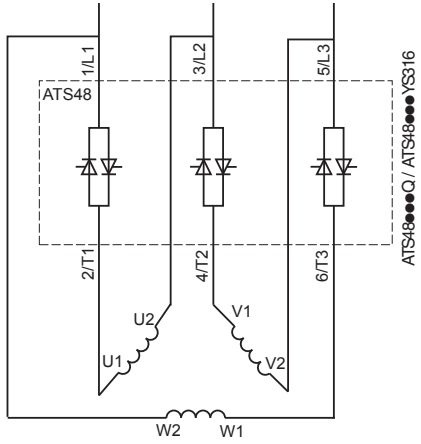

Connection in the motor delta winding

See application diagram **page 115**

Example:
A 400 V - 110 kW motor with a line current of 195 A (nominal current for the delta connection).
The current in each winding is equal to 195/1.7 or 114 A.
The rating is determined by selecting the starter with a maximum permanent nominal current just above this current, i.e. 140 A (ATS48C14Q for a standard application).
To avoid having to calculate the rating in this way, use the tables on page 98 and 99 which indicate the rating of the starter corresponding to the motor power for each application type.

Standard application, 230/415 V supply, starter with line connection

Motor		Starter 230/415 V (+ 10% - 15%) - 50/60 Hz		
Nominal motor power		Max. permanent current in class 10	ICL rating	Starter reference
230 V	400 V			
kW	**kW**	**A**	**A**	
4	7.5	17	17	ATS 48D17Q
5.5	11	22	22	ATS 48D22Q
7.5	15	32	32	ATS 48D32Q
9	18.5	38	38	ATS 48D38Q
11	22	47	47	ATS 48D47Q
15	30	62	62	ATS 48D62Q
18.5	37	75	75	ATS 48D75Q
22	45	88	88	ATS 48D88Q
30	55	110	110	ATS 48C11Q
37	75	140	140	ATS 48C14Q
45	90	170	170	ATS 48C17Q
55	110	210	210	ATS 48C21Q
75	132	250	250	ATS 48C25Q
90	160	320	320	ATS 48C32Q
110	220	410	410	ATS 48C41Q
132	250	480	480	ATS 48C48Q
160	315	590	590	ATS 48C59Q
(1)	355	660	660	ATS 48C66Q
220	400	790	790	ATS 48C79Q
250	500	1000	1000	ATS 48M10Q
355	630	1200	1200	ATS 48M12Q

The nominal motor current In must not exceed the max. permanent current in class 10.
(1) Value not indicated when there is no corresponding standardised motor.

Temperature derating

The information in the table above is based on operation at a maximum ambient temperature of 40°C.
The ATS 48 can be used up to an ambient temperature of 60°C as long as the max. permanent current in class 10 is derated by 2% for each degree above 40°C.
Example: ATS 48D32Q at 50°C derated by 10 x 2% = 20%, 32 A becomes 32 x 0.8 = 25.6 A (max. nominal motor current).

Severe application, 230/415 V supply, starter with line connection

Motor		Starter 230/415 V (+ 10% - 15%) - 50/60 Hz		
Nominal motor power		Max. permanent current in class 20	ICL rating	Starter reference
230 V	400 V			
kW	**kW**	**A**	**A**	
3	5.5	12	17	ATS 48D17Q
4	7.5	17	22	ATS 48D22Q
5.5	11	22	32	ATS 48D32Q
7.5	15	32	38	ATS 48D38Q
9	18.5	38	47	ATS 48D47Q
11	22	47	62	ATS 48D62Q
15	30	62	75	ATS 48D75Q
18.5	37	75	88	ATS 48D88Q
22	45	88	110	ATS 48C11Q
30	55	110	140	ATS 48C14Q
37	75	140	170	ATS 48C17Q
45	90	170	210	ATS 48C21Q
55	110	210	250	ATS 48C25Q
75	132	250	320	ATS 48C32Q
90	160	320	410	ATS 48C41Q
110	220	410	480	ATS 48C48Q
132	250	480	590	ATS 48C59Q
160	315	590	660	ATS 48C66Q
(1)	355	660	790	ATS 48C79Q
220	400	790	1000	ATS 48M10Q
250	500	1000	1200	ATS 48M12Q

The nominal motor current In must not exceed the max. permanent current in class 20.
(1) Value not indicated when there is no corresponding standardised motor.

Temperature derating

The information in the table above is based on operation at a maximum ambient temperature of 40°C.
The ATS 48 can be used up to an ambient temperature of 60°C as long as the max. permanent current in class 20 is derated by 2% for each degree above 40°C.
Example: ATS 48D32Q at 50°C derated by 10 x 2% = 20%, 22 A becomes 22 x 0.8 = 17.6 A (max. nominal motor current).

Standard application, 230/415 V supply, starter with delta connection

Motor		Starter 230/415 V (+ 10% - 15%) - 50/60 Hz		
Nominal motor power		Max. permanent current in class 10	ICL rating	Starter reference
230 V	400 V			
kW	**kW**	**A**	**A**	
7.5	15	29	29	ATS 48D17Q
9	18.5	38	38	ATS 48D22Q
15	22	55	55	ATS 48D32Q
18.5	30	66	66	ATS 48D38Q
22	45	81	81	ATS 48D47Q
30	55	107	107	ATS 48D62Q
37	55	130	130	ATS 48D75Q
45	75	152	152	ATS 48D88Q
55	90	191	191	ATS 48C11Q
75	110	242	242	ATS 48C14Q
90	132	294	294	ATS 48C17Q
110	160	364	364	ATS 48C21Q
132	220	433	433	ATS 48C25Q
160	250	554	554	ATS 48C32Q
220	315	710	710	ATS 48C41Q
250	355	831	831	ATS 48C48Q
(1)	400	1022	1022	ATS 48C59Q
315	500	1143	1143	ATS 48C66Q
355	630	1368	1368	ATS 48C79Q
(1)	710	1732	1732	ATS 48M10Q
500	(1)	2078	2078	ATS 48M12Q

The nominal motor current In must not exceed the max. permanent current in class 10.
(1) Value not indicated when there is no corresponding standardised motor.

Temperature derating

The information in the table above is based on operation at a maximum ambient temperature of 40°C.
The ATS 48 can be used up to an ambient temperature of 60°C as long as the max. permanent current in class 10 is derated by 2% for each degree above 40°C.
Example: ATS 48D32Q at 50°C derated by 10 x 2% = 20%, 55 A becomes 55 x 0.8 = 44 A (max. nominal motor current).

Severe application, 230/415 V supply, starter with delta connection

Motor		Starter 230/415 V (+ 10% - 15%) - 50/60 Hz		
Nominal motor power		Max. permanent current in class 20	ICL rating	Starter reference
230 V	400 V			
kW	**kW**	**A**	**A**	
5.5	11	22	29	ATS 48D17Q
7.5	15	29	38	ATS 48D22Q
9	18.5	38	55	ATS 48D32Q
15	22	55	66	ATS 48D38Q
18.5	30	66	81	ATS 48D47Q
22	45	81	107	ATS 48D62Q
30	55	107	130	ATS 48D75Q
37	55	130	152	ATS 48D88Q
45	75	152	191	ATS 48C11Q
55	90	191	242	ATS 48C14Q
75	110	242	294	ATS 48C17Q
90	132	294	364	ATS 48C21Q
110	160	364	433	ATS 48C25Q
132	220	433	554	ATS 48C32Q
160	250	554	710	ATS 48C41Q
220	315	710	831	ATS 48C48Q
250	355	831	1022	ATS 48C59Q
(1)	400	1022	1143	ATS 48C66Q
315	500	1143	1368	ATS 48C79Q
355	630	1368	1732	ATS 48M10Q
(1)	710	1732	2078	ATS 48M12Q

The nominal motor current In must not exceed the max. permanent current in class 20.
(1) Value not indicated when there is no corresponding standardised motor.

Temperature derating

The information in the table above is based on operation at a maximum ambient temperature of 40°C.
The ATS 48 can be used up to an ambient temperature of 60°C as long as the max. permanent current in class 20 is derated by 2% for each degree above 40°C.
Example: ATS 48D32Q at 50°C derated by 10 x 2% = 20%, 38 A becomes 38 x 0.8 = 30.4 A (max. nominal motor current).

Standard application, 208/690 V supply, starter with line connection

Motor							Starter 208/690 V (+ 10% - 15%) - 50/60 Hz		
Nominal motor power							Max. permanent current in class 10	ICL rating	Starter reference
208 V	230 V	440 V	460 V	500 V	575 V	690 V			
HP	**HP**	**kW**	**HP**	**kW**	**HP**	**kW**	**A**	**A**	
3	5	7.5	10	9	15	15	17	17	ATS 48D17Y
5	7.5	11	15	11	20	18.5	22	22	ATS 48D22Y
7,5	10	15	20	18.5	25	22	32	32	ATS 48D32Y
10	(1)	18.5	25	22	30	30	38	38	ATS 48D38Y
(1)	15	22	30	30	40	37	47	47	ATS 48D47Y
15	20	30	40	37	50	45	62	62	ATS 48D62Y
20	25	37	50	45	60	55	75	75	ATS 48D75Y
25	30	45	60	55	75	75	88	88	ATS 48D88Y
30	40	55	75	75	100	90	110	110	ATS 48C11Y
40	50	75	100	90	125	110	140	140	ATS 48C14Y
50	60	90	125	110	150	160	170	170	ATS 48C17Y
60	75	110	150	132	200	200	210	210	ATS 48C21Y
75	100	132	200	160	250	250	250	250	ATS 48C25Y
100	125	160	250	220	300	315	320	320	ATS 48C32Y
125	150	220	300	250	350	400	410	410	ATS 48C41Y
150	(1)	250	350	315	400	500	480	480	ATS 48C48Y
(1)	200	355	400	400	500	560	590	590	ATS 48C59Y
200	250	400	500	(1)	600	630	660	660	ATS 48C66Y
250	300	500	600	500	800	710	790	790	ATS 48C79Y
350	350	630	800	630	1000	900	1000	1000	ATS 48M10Y
400	450	710	1000	800	1200	(1)	1200	1200	ATS 48M12Y

The nominal motor current In must not exceed the max. permanent current in class 10.
(1) Value not indicated when there is no corresponding standardised motor.

Temperature derating

The information in the table above is based on operation at a maximum ambient temperature of 40°C.
The ATS 48 can be used up to an ambient temperature of 60°C as long as the max. permanent current in class 10 is derated by 2% for each degree above 40°C.
Example: ATS 48D32Y at 50°C derated by 10 x 2% = 20%, 32 A becomes 32 x 0.8 = 25.6 A (max. nominal motor current).

Severe application, 208/690 V supply, starter with line connection

Motor							Starter 208/690 V (+ 10% - 15%) - 50/60 Hz		
Nominal motor power							Max. permanent current in class 20	ICL rating	Starter reference
208 V	230 V	440 V	460 V	500 V	575 V	690 V			
HP	**HP**	**kW**	**HP**	**kW**	**HP**	**kW**	**A**	**A**	
2	3	5.5	7.5	7.5	10	11	12	17	ATS 48D17Y
3	5	7.5	10	9	15	15	17	22	ATS 48D22Y
5	7.5	11	15	11	20	18.5	22	32	ATS 48D32Y
7,5	10	15	20	18.5	25	22	32	38	ATS 48D38Y
10	(1)	18.5	25	22	30	30	38	47	ATS 48D47Y
(1)	15	22	30	30	40	37	47	62	ATS 48D62Y
15	20	30	40	37	50	45	62	75	ATS 48D75Y
20	25	37	50	45	60	55	75	88	ATS 48D88Y
25	30	45	60	55	75	75	88	110	ATS 48C11Y
30	40	55	75	75	100	90	110	140	ATS 48C14Y
40	50	75	100	90	125	110	140	170	ATS 48C17Y
50	60	90	125	110	150	160	170	210	ATS 48C21Y
60	75	110	150	132	200	200	210	250	ATS 48C25Y
75	100	132	200	160	250	250	250	320	ATS 48C32Y
100	125	160	250	220	300	315	320	410	ATS 48C41Y
125	150	220	300	250	350	400	410	480	ATS 48C48Y
150	(1)	250	350	315	400	500	480	590	ATS 48C59Y
(1)	200	355	400	400	500	560	590	660	ATS 48C66Y
200	250	400	500	(1)	600	630	660	790	ATS 48C79Y
250	300	500	600	500	800	710	790	1000	ATS 48M10Y
350	350	630	800	630	1000	900	1000	1200	ATS 48M12Y

The nominal motor current In must not exceed the max. permanent current in class 20.
(1) Value not indicated when there is no corresponding standardised motor.

Temperature derating

The information in the table above is based on operation at a maximum ambient temperature of 40°C.
The ATS 48 can be used up to an ambient temperature of 60°C as long as the max. permanent current in class 20 is derated by 2% for each degree above 40°C.
Example: ATS 48D32Y at 50°C derated by 10 x 2% = 20%, 22 A becomes 22 x 0.8 = 17.6 A (max. nominal motor current).

Dimensions

ATS 48D17 • …C66 •

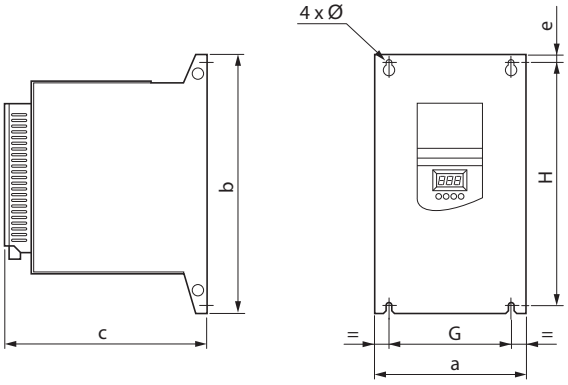

ATS 48	a mm	b mm	c mm	e mm	G mm	H mm	Ø mm	Weight kg
D17Q, D17Y D22Q, D22Y D32Q, D32Y D38Q, D38Y D47Q, D47Y	160	275	190	6.6	100	260	7	4.9
D62Q, D62Y D75Q, D75Y D88Q, D88Y C11Q, C11Y	190	290	235	10	150	270	7	8.3
C14Q, C14Y C17Q, C17Y	200	340	265	10	160	320	7	12.4
C21Q, C21Y C25Q, C25Y C32Q, C32Y	320	380	265	15	250	350	9	18.2
C41Q, C41Y C48Q, C48Y C59Q, C59Y C66Q, C66Y	400	670	300	20	300	610	9	51.4

Dimensions

ATS 48C79 • …M12 •

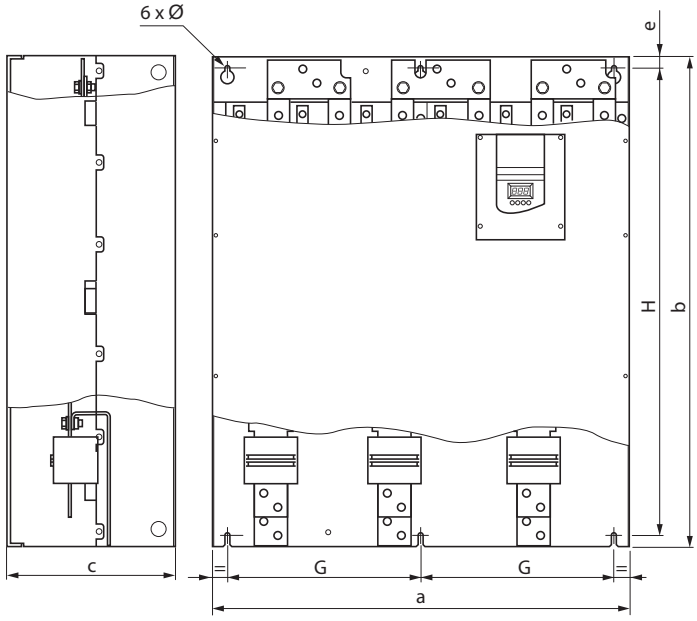

ATS 48	a mm	b mm	c mm	e mm	G mm	H mm	Ø mm	Weight kg
C79Q, C79Y M10Q, M10Y M12Q, M12Y	770	890	315	20	350	850	11	115

Mounting recommendations

Install the unit vertically, at ± 10°.

Do not install the unit close to, especially above, heating elements.

Leave sufficient free space to ensure that the air required for cooling purposes can circulate from the bottom to the top of the unit.

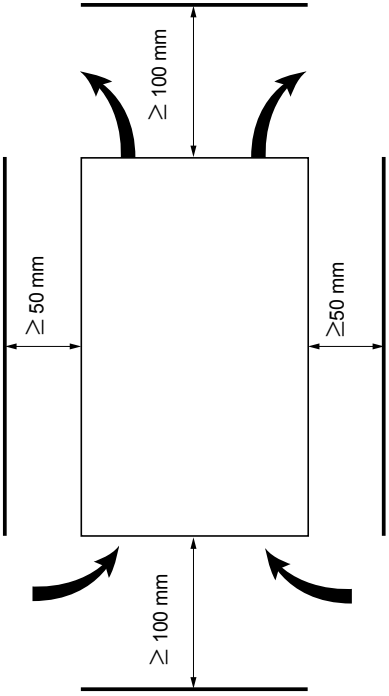

Check that no liquids, dust or conductive objects can fall into the starter (degree of protection IP00 from above)

Starter ventilation

On starters fitted with a cooling fan, the fan is switched on automatically as soon as the heatsink temperature reaches 50°C. It is switched off when the temperature falls back to 40°C.

Fan flow rate:

ATS 48 D32 • and D38 • : 14 m^3/hour
ATS 48 D47 • : 28 m^3/hour
ATS 48 D62 • to C11 • : 86 m^3/hour
ATS 48 C14 • and C17 • : 138 m^3/hour
ATS 48 C21 • to C32 • : 280 m^3/hour
ATS 48 C41 • to C66 • : 600 m^3/hour
ATS 48 C79 • to M12 • : 1,200 m^3/hour

Mounting in a wall-fixing or floor-standing enclosure

Metal wall-fixing or floor-standing enclosure with IP 23 degree of protection

Observe the mounting recommendations on the previous page.

To ensure proper air circulation in the drive:

- Fit ventilation grilles.
- Ensure that ventilation is adequate: if not install a forced ventilation unit, with a filter if necessary.

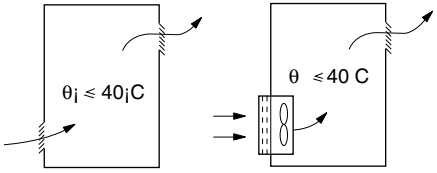

Power dissipated by the starters, not bypassed, at their nominal current

Starter reference ATS 48	Power in W	Starter reference ATS 48	Power in W
D17Q, D17Y	59	C21Q, C21Y	580
D22Q, D22Y	74	C25Q, C25Y	695
D32Q, D32Y	104	C32Q, C32Y	902
D38Q, D38Y	116	C41Q, C41Y	1339
D47Q, D47Y	142	C48Q, C48Y	1386
D62Q, D62Y	201	C59Q, C59Y	1731
D75Q, D75Y	245	C66Q, C66Y	1958
D88Q, D88Y	290	C79Q, C79Y	2537
C11Q, C11Y	322	M10Q, M10Y	2865
C14Q, C14Y	391	M12Q, M12Y	3497
C17Q, C17Y	479		

Note: When the starters are bypassed the amount of power dissipated is extremely small (between 15 and 30 W)

- Control consumption (all ratings): 25 W non-ventilated
- Control consumption with fan ventilated :

Soft start	Power consumption (W)	Apparent power (VA)
ATS 48D17● to C17●	30	80
ATS 48C21● to C32●	50	130
ATS 48C41● to M12●	80	240

Power terminals

Terminals	Functions	Maximum connection capacity Terminal tightening torque					
		ATS 48 D17 • D22 • D32 • D38 • D47 •	ATS 48 D62 • D75 • D88 • C11 •	ATS 48 C14 • C17 •	ATS 48 C21 • C25 • C32 •	ATS 48 C41 • C48 • C59 • C66 •	ATS 48 C79 • M10 • M12 •
⏚	Earth connections connected to earth	10 mm^2 1.7 N.m	16 mm^2 3 N.m	120 mm^2 27 N.m	120 mm^2 27 N.m	240 mm^2 27 N.m	2x240 mm^2 27 N.m
		8 AWG 15 lb.in	4 AWG 26 lb.in	Busbar 238 lb.in	Busbar 238 lb.in	Busbar 238 lb.in	Busbar 238 lb.in
1/L1 3/L2 5/L3	Power supply	16 mm^2 3 N.m	50 mm^2 10 N.m	95 mm^2 34 N.m	240 mm^2 34 N.m	2x240 mm^2 57 N.m	4x240 mm^2 57 N.m
		8 AWG 26 lb.in	2/0 AWG 88 lb.in	2/0 AWG 300 lb.in	Busbar 300 lb.in	Busbar 500 lb.in	Busbar 500 lb.in
2/T1 4/T2 6/T3	Outputs to motor	16 mm^2 3 N.m	50 mm^2 10 N.m	95 mm^2 34 N.m	240 mm^2 34 N.m	2x240 mm^2 57 N.m	4x240 mm^2 57 N.m
		8 AWG 26 lb.in	2/0 AWG 88 lb.in	2/0 AWG 300 lb.in	Busbar 300 lb.in	Busbar 500 lb.in	Busbar 500 lb.in
A2 B2 C2	Starter bypass	16 mm^2 3 N.m	50 mm^2 10 N.m	95 mm^2 34 N.m	240 mm^2 34 N.m	2x240 mm^2 57 N.m	4x240 mm^2 57 N.m
		8 AWG 26 lb.in	2/0 AWG 88 lb.in	2/0 AWG 300 lb.in	Busbar 300 lb.in	Busbar 500 lb.in	Busbar 500 lb.in

Layout of the power terminals, ATS 48D17 • to C11 •

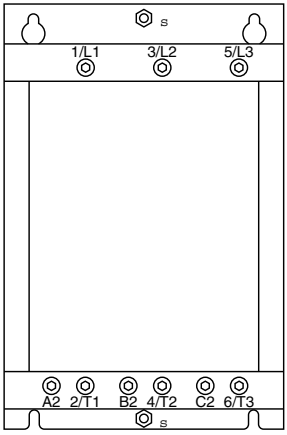

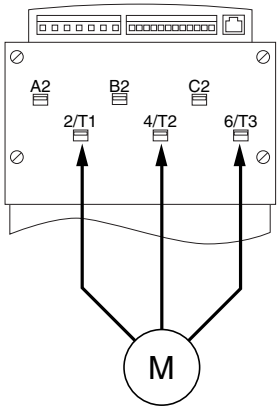

Motor to be connected to 2/T1, 4/T2, 6/T3

Layout of the power terminals, ATS 48C14 • and C17 •

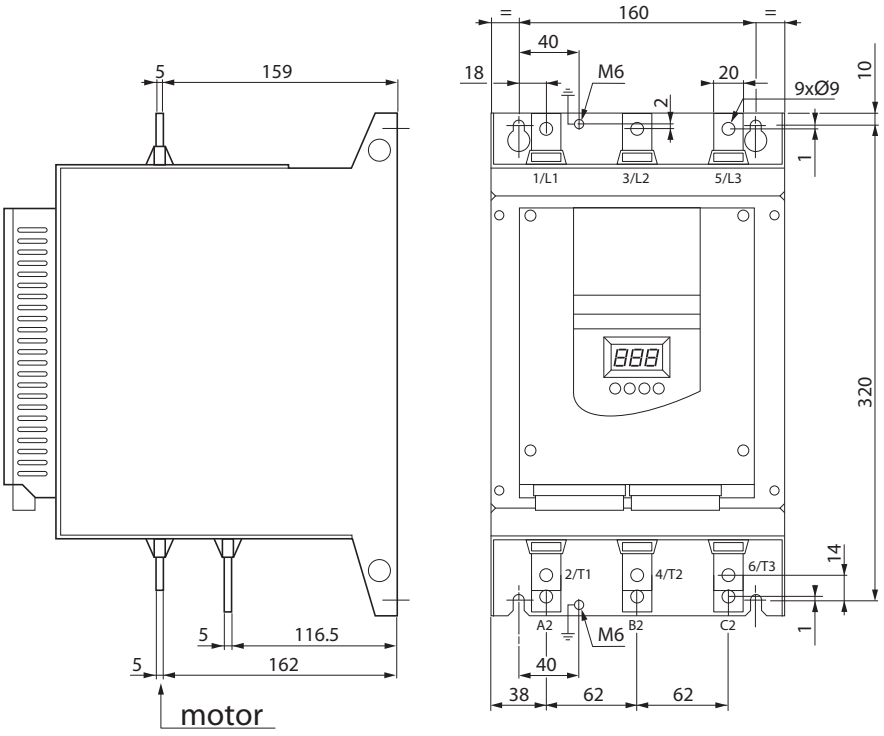

Layout of the power terminals, ATS 48C21 • to C32 •

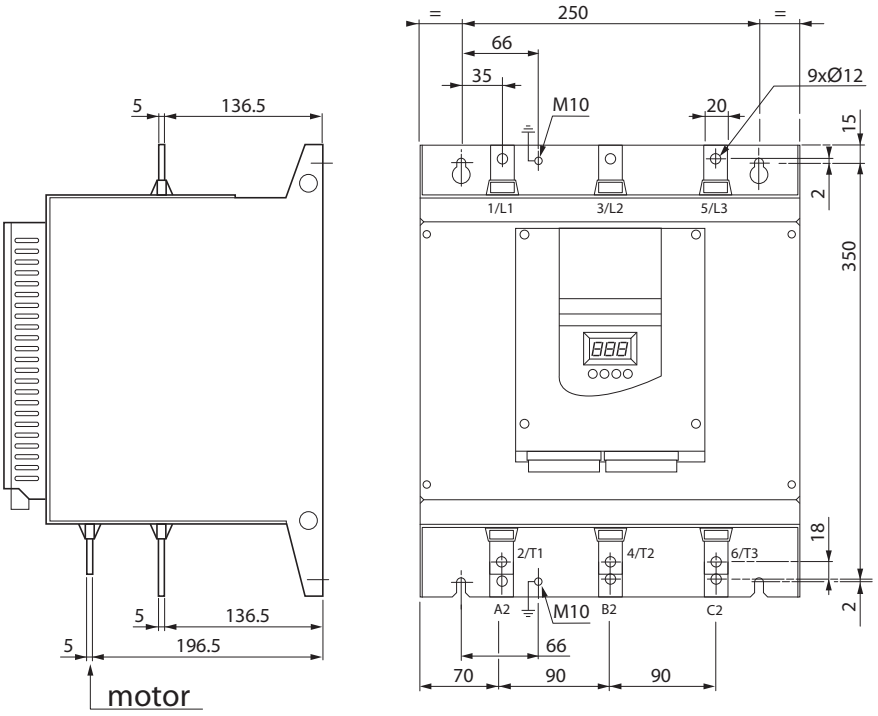

Layout of the power terminals, ATS 48C41 • to C66 •

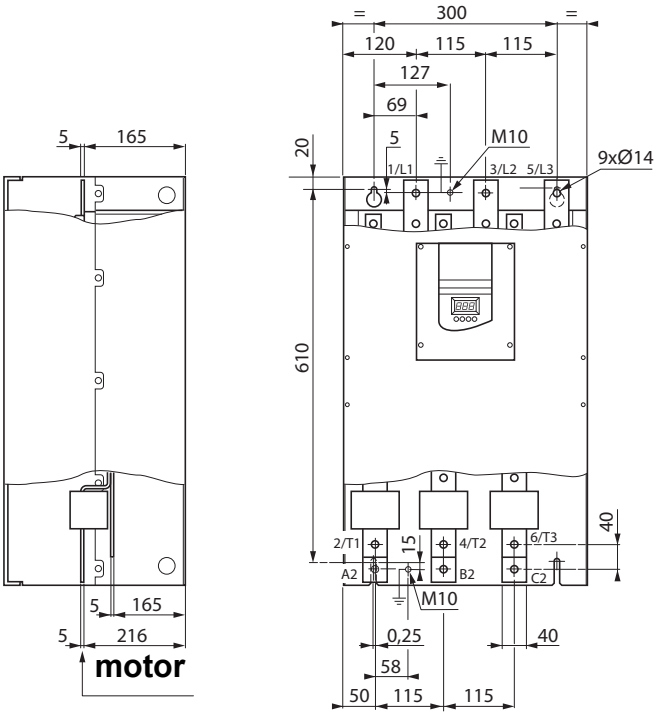

Layout of the power terminals, ATS 48C79 • to M12 •

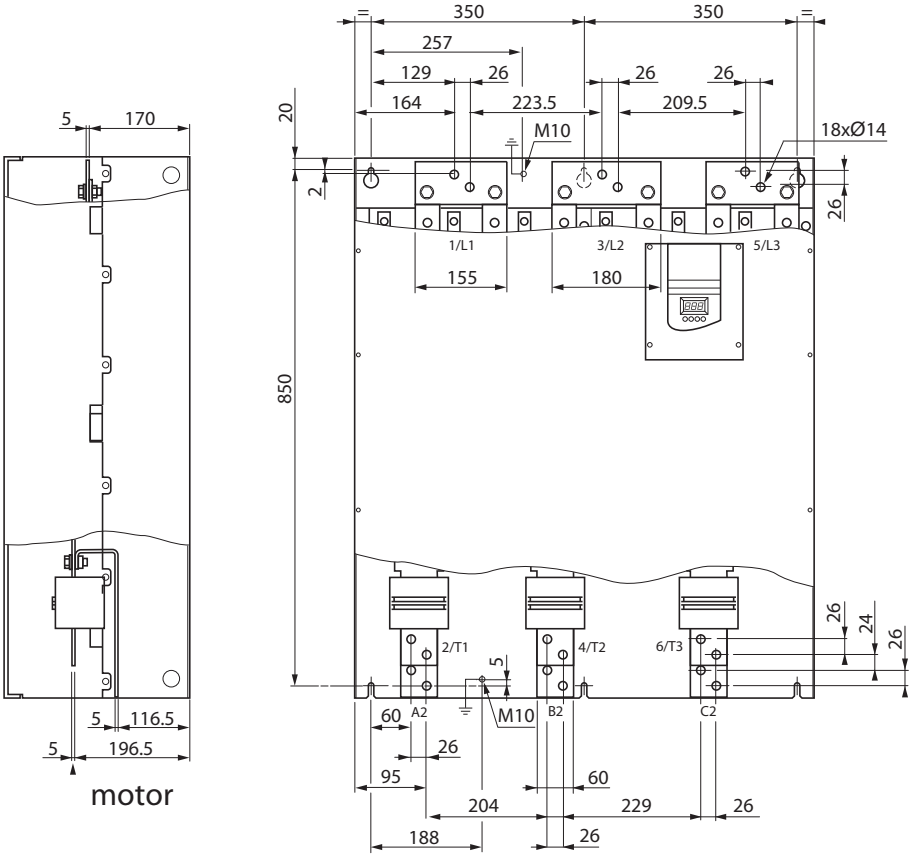

Control terminals

The control terminals are fitted with one way plug-in connectors.

Maximum connection capacity : 2.5 mm2 (12 AWG)
Maximum tightening torque : 0.4 N.m (3.5 lb.in)

In order to access the control terminals on ATS 48C17 • to M12 • starters, the protective cover must be removed.

Electrical characteristics

Terminals	Function	Characteristics
CL1 CL2	Altistart control power supply	ATS 48 ●●● Q: 220 to 415 V + 10% - 15%, 50/60 Hz ATS 48 ●●● Y: 110 to 230 V + 10% - 15%, 50/60 Hz Consumption see page 105.
R1A R1C	Normally open (N/O) contact of programmable relay r1	Min. switching capacity • 10 mA for 6 V ⎓ Max. switching capacity on inductive load (cos φ = 0.5 and L/R = 20 ms): • 1.8 A for 230 V~ and 30 V ⎓ Max. voltage 400 V
R2A R2C	Normally open (N/O) contact of end of starting relay r2	
R3A R3C	Normally open (N/O) contact of programmable relay r3	
STOP RUN LI3 LI4	Stop starter (state 0 = stop) Run starter (state 1 = run if STOP is at 1) Programmable input Programmable input	4 x 24 V logic inputs with 4.3 kW impedance Umax = 30 V, Imax = 8 mA state 1: U > 11 V - I > 5 mA state 0: U < 5 V - I < 2 mA
24V	Logic input power supply	+24 V ± 25% isolated and protected against short-circuits and overloads, maximum current: 200 mA
LO+	Logic output power supply	To be connected to 24 V or an external source
LO1 LO2	Programmable logic outputs	2 open collector outputs, compatible with level 1 PLC, IEC 65A-68 standard. • Power supply +24 V (min. 12 V, max. 30 V) • Max. current 200 mA per output with an external source
AO1	Programmable analog output	Output can be configured as 0 - 20 mA or 4 - 20 mA • accuracy ± 5% of the max. value, max. load impedance 500 Ω
COM	I/O common	0 V
PTC1 PTC2	Input for PTC probes	Total resistance of probe circuit 750 W at 25°C (3 x 250 W probes in series, for example)
(RJ 45)	Connector for • remote terminal • PowerSuite • communication bus	RS 485 Modbus

Layout of control terminals

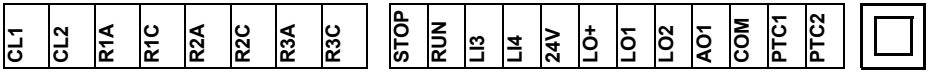

(RJ 45)

Wiring recommendations

Power

Observe the cable cross-sectional areas recommended in the standards.

The starter must be earthed to conform to the regulations concerning leakage currents. When the use of an upstream "residual current device" for protection is required by the installation standards, an A-Si type device must be used (to avoid accidental tripping during power up). Check its compatibility with the other protective devices. If the installation involves several starters on the same line, each starter must be earthed separately. If necessary, fit a line choke (consult the catalogue).

Keep the power cables separate from circuits in the installation with low-level signals (detectors, PLCs, measuring apparatus, video, telephone).

Control

Keep the control circuits away from the power cables.

Functions of the RUN and STOP logic inputs (See application diagram see page 114)

2-wire control

Run and stop are controlled by state 1 (run) or 0 (stop), which is taken into account at the same time on the RUN and STOP inputs.

On power-up or a manual fault reset the motor will restart if the RUN command is present.

3-wire control

Run and stop are controlled by 2 different logic inputs.
A stop is obtained on opening (state 0) the STOP input.
The pulse on the RUN input is stored until the stop input opens.

On power-up or a manual fault reset or after a stop command, the motor can only be powered once the RUN input has been opened (state 0) followed by a new pulse (state 1).

Application diagram

ATS 48: Non-reversing, with line contactor, freewheel stop, type 1 coordination

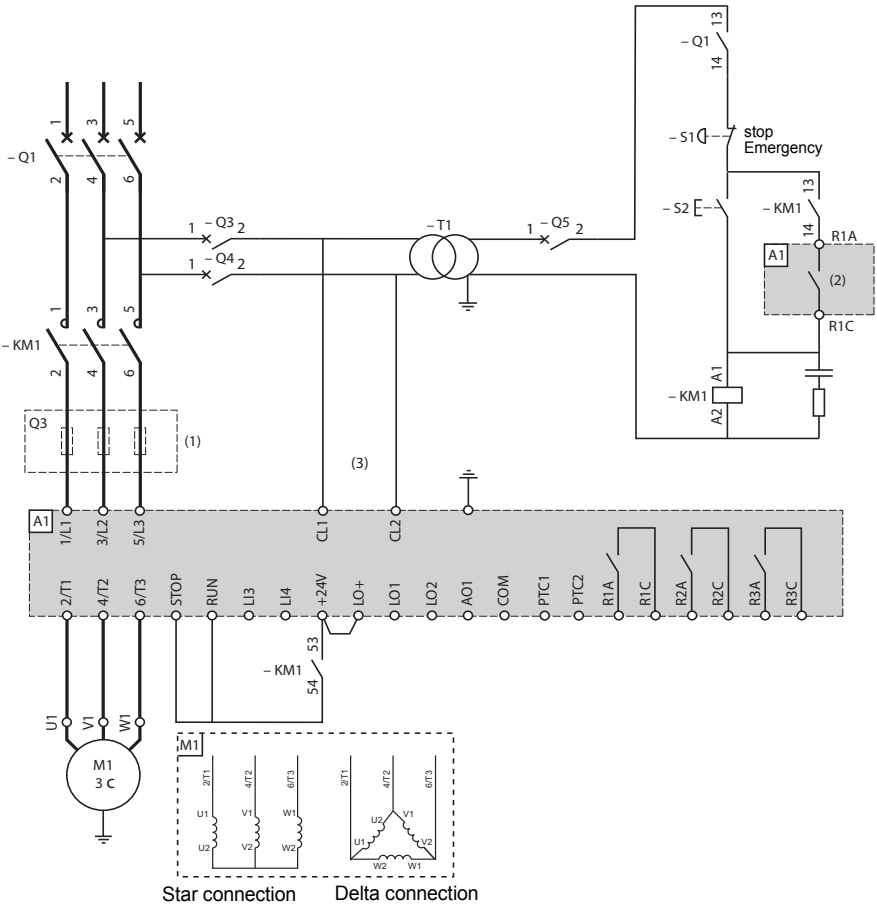

(1)Installation of fast-acting fuses for type 2 coordination (conforming to IEC 60 947-4-2)
(2)Assignment of relay R1: isolating relay (r1I). See “Electrical characteristics”, page 111. Beware of the operating limits of the contact, for example when connecting to high rating contactors.
(3)Insert a transformer if the supply voltage is different to that permitted by the ATS 48 control. See “Electrical characteristics”, page 111.

ATS 48: Non-reversing with line contactor, bypass, freewheel or controlled stop, type 1 coordination

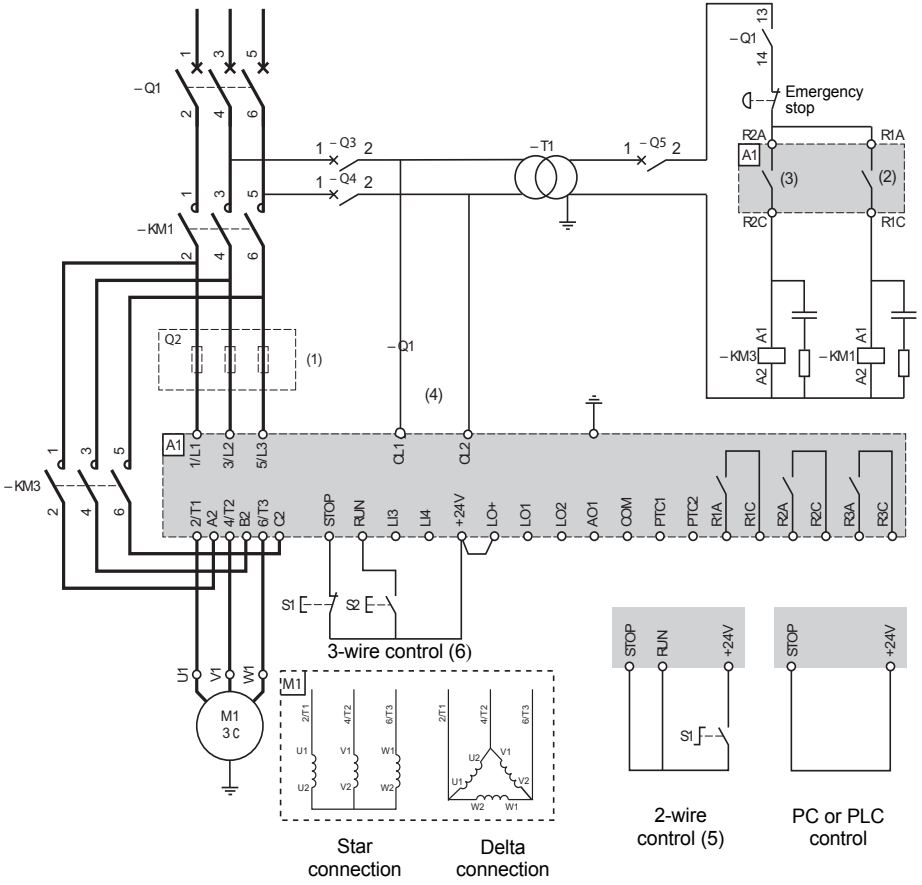

(1) Installation of fast-acting fuses for type 2 coordination (conforming to IEC 60 947-4-2)
(2) Assignment of relay R1: isolating relay (r1l). Beware of the operating limits of the contact, for example when connecting to high rating contactors. See “Electrical characteristics”, page 111.
(3) Beware of the operating limits of the contact, for example when connecting to high rating contactors. See “Electrical characteristics”, page 111.
(4) Insert a transformer if the supply voltage is different to that permitted by the ATS 48 control. See “Electrical characteristics”, page 111.
(5)See “2-wire control”, page 112.
(6)See “3-wire control”, page 112.

Application diagram

ATS 48: Non-reversing, freewheel stop, type 1 coordination, with line contactor, bypass, connection to delta in the motor, ATS 48•••Q or ATS 48•••YS316

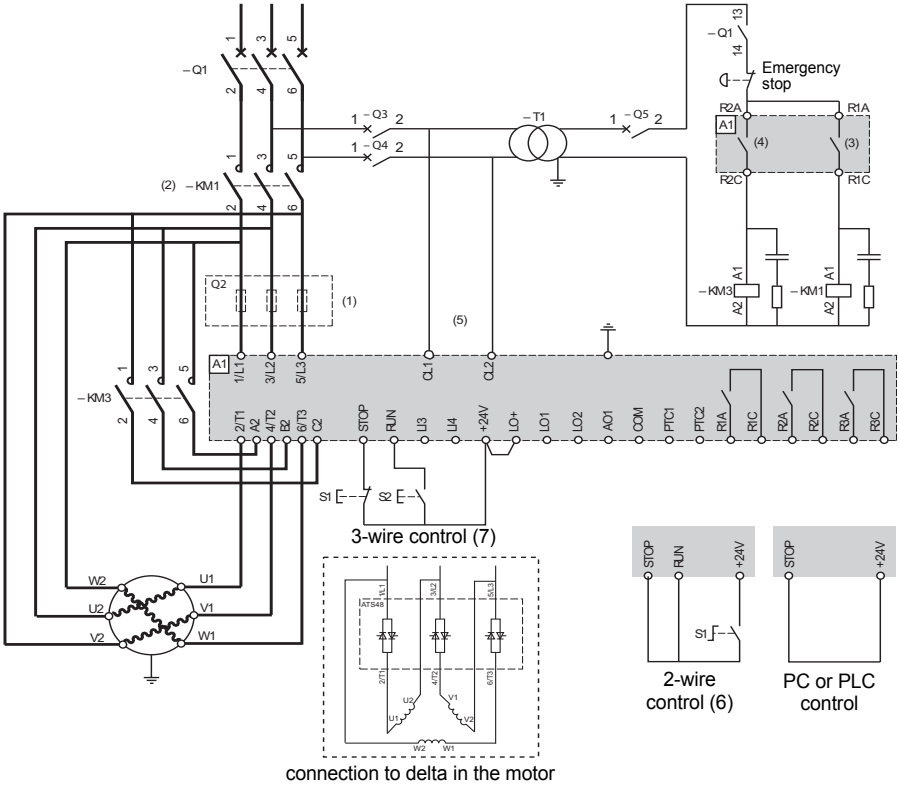

Note: Set dIt to on (see “Advanced settings menu (drC)”, page 141)

(1)Installation of fast-acting fuses for type 2 coordination (conforming to IEC 60 947-4-2).

(2)It is mandatory to use KM1. External differential thermal protection will need to be added type Vigirex pour Compact NS80, bloc Vigi pour Compact NS400 à 630,consulter le catalogue Merlin Gérin pour les calibres supérieurs.

(3)Assignment of relay R1: isolating relay (r1I). Beware of the operating limits of the contact, for example when connecting to high rating contactors. See “Electrical characteristics”, page 111.

(4)Beware of the operating limits of the contact, for example when connecting to high rating contactors. See “Electrical characteristics”, page 111.

(5)Insert a transformer if the supply voltage is different to that permissible by the ATS 48 control. See “Electrical characteristics”, page 111.

(6)See “2-wire control”, page 112.

(7)See “3-wire control”, page 112.

(8)Inductances de lignes éventuelles

If the bypass contactor is used, "PHF" fault detection can be extended.

ATS 48: Non-reversing, freewheel or controlled stop, line contactor, motor bypass, LSP/HSP with two sets of parameters

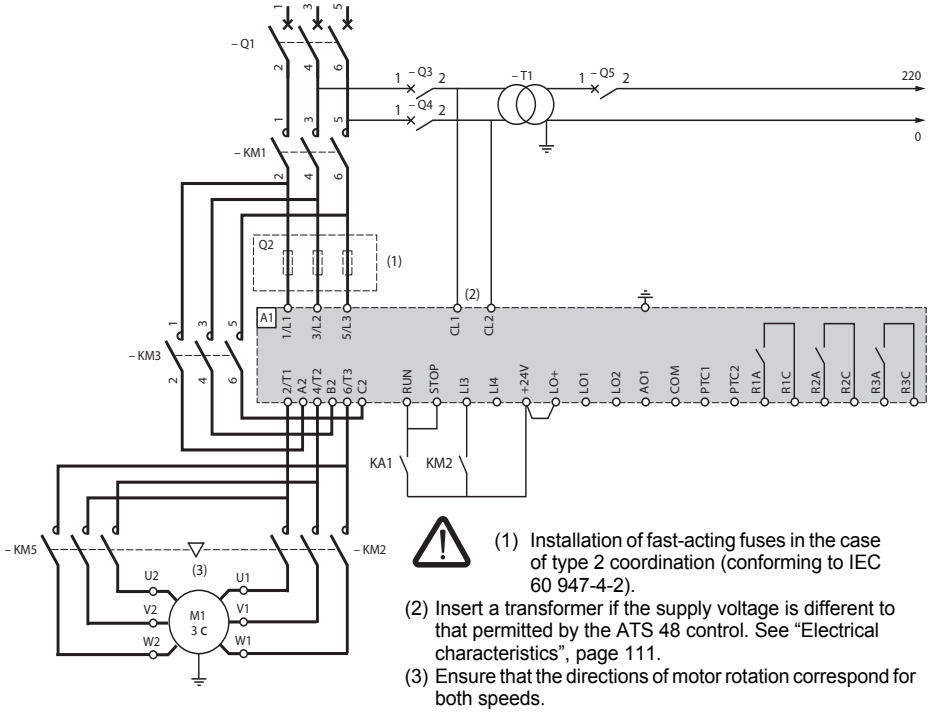

(1) Installation of fast-acting fuses in the case of type 2 coordination (conforming to IEC 60 947-4-2).

(2) Insert a transformer if the supply voltage is different to that permitted by the ATS 48 control. See “Electrical characteristics”, page 111.

(3) Ensure that the directions of motor rotation correspond for both speeds.

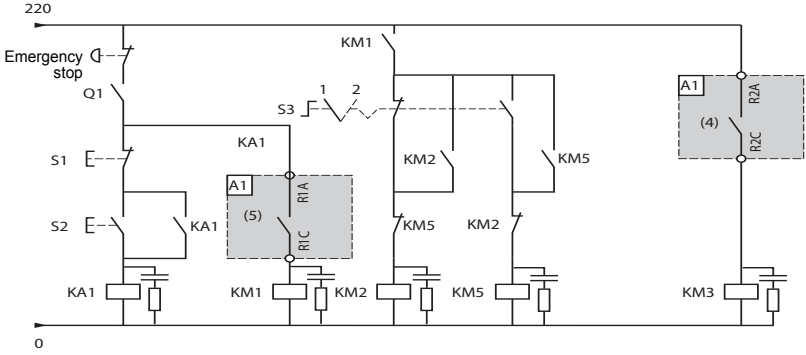

(4) Beware of the operating limits of the contact, for example when connecting to high rating contactors. See “Electrical characteristics”, page 111.

(5) Assignment of relay R1: isolating relay (r1I). Beware of the operating limits of the contact, for example when connecting to high rating contactors. See “Electrical characteristics”, page 111.
LI3 = LIS (second set of motor parameters)
S3: 1 = LSP, 2 = HSP

ATS 48: Non-reversing with line contactor, starting and deceleration of several cascaded motors with a single Altistart

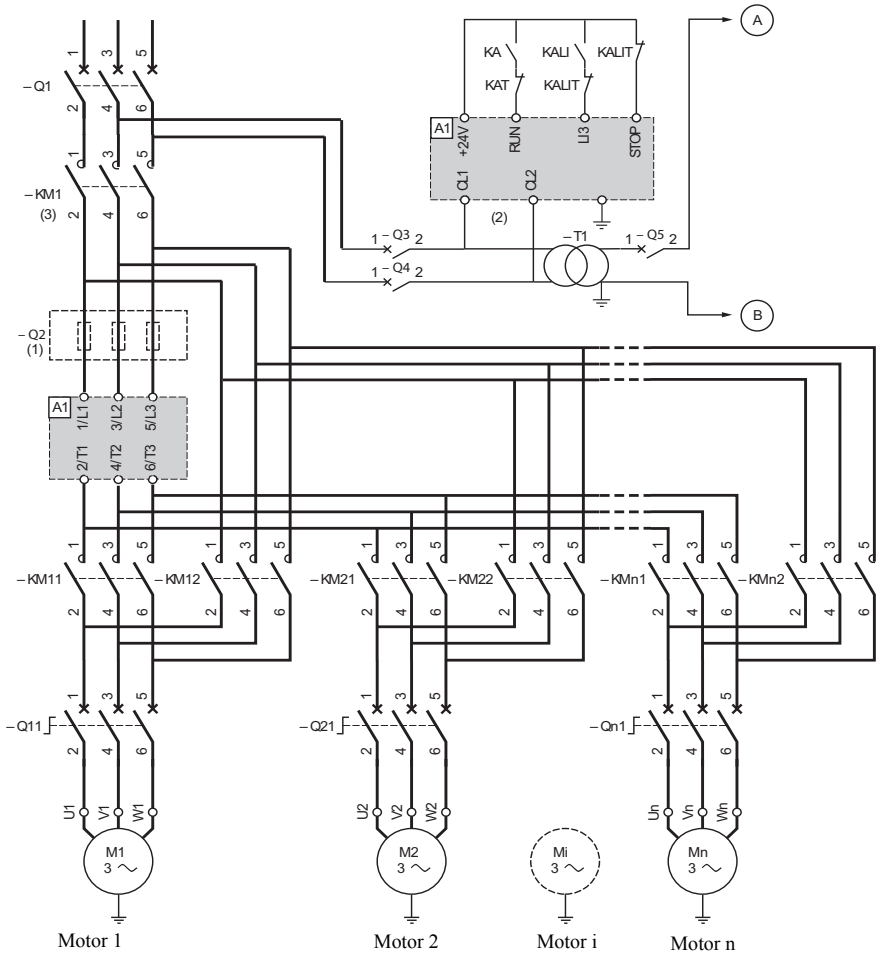

(1) Installation of fuses for type 2 coordination (conforming to IEC 60 947-4-2)
(2) Insert a transformer if the supply voltage is different to that permitted by the ATS 48 control. See “Electrical characteristics”, page 111.
(3) KM1: Must be sized in accordance with the total power of the motors.

Important:
- A "cascading" logic input must be configured on the ATS48 (LI3 = LIC). See “Activation of the cascade function”, page 142.
- In the event of a fault it will not be possible to decelerate or brake any motors that may be running at that time.
- Adjust the thermal protection of each circuit breaker Qn1 to the nominal motor current.

Application diagram

ATS 48: Non-reversing with line contactor, starting and deceleration of several cascaded motors with a single Altistart

Motor 1 control

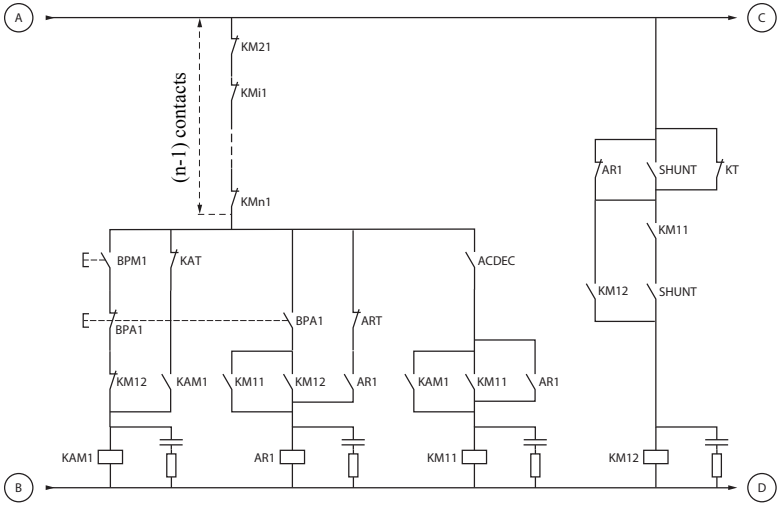

Motor 2 control

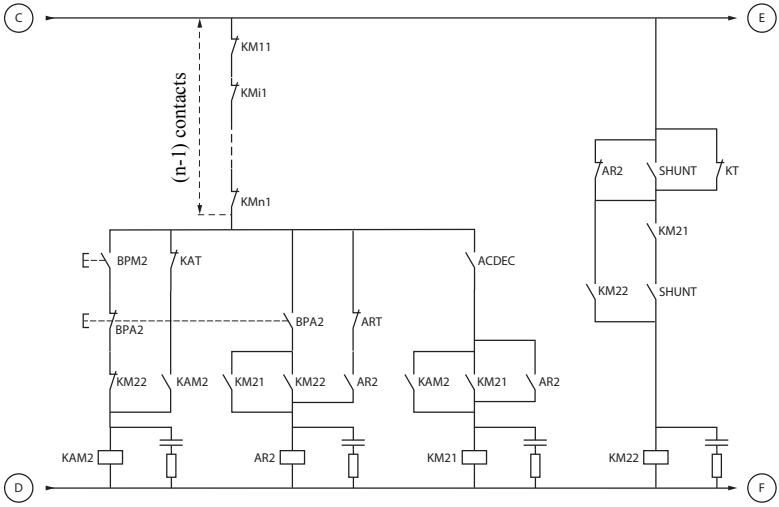

BPM1: "Run" button motor 1
BPM2: "Run" button motor 2

BPA1: "Stop" button motor 1
BPA2: "Stop" button motor 2

Application diagram

ATS 48: Non-reversing with line contactor, starting and deceleration of several cascaded motors with a single Altistart

Motor n control

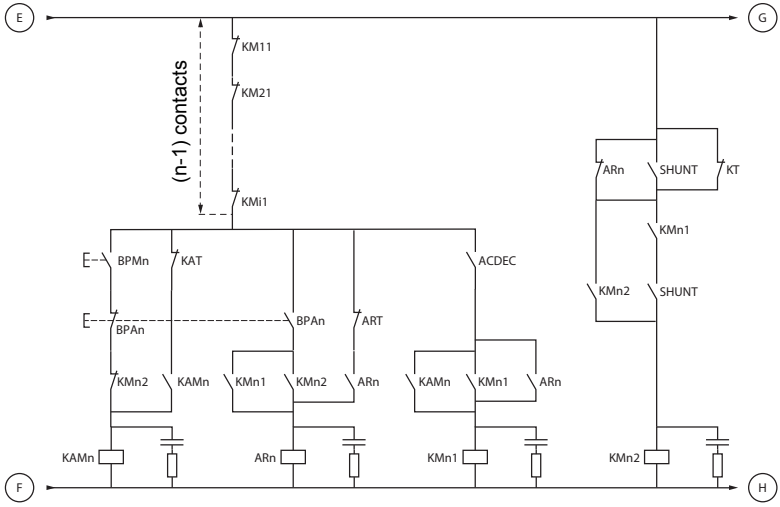

Cascade control

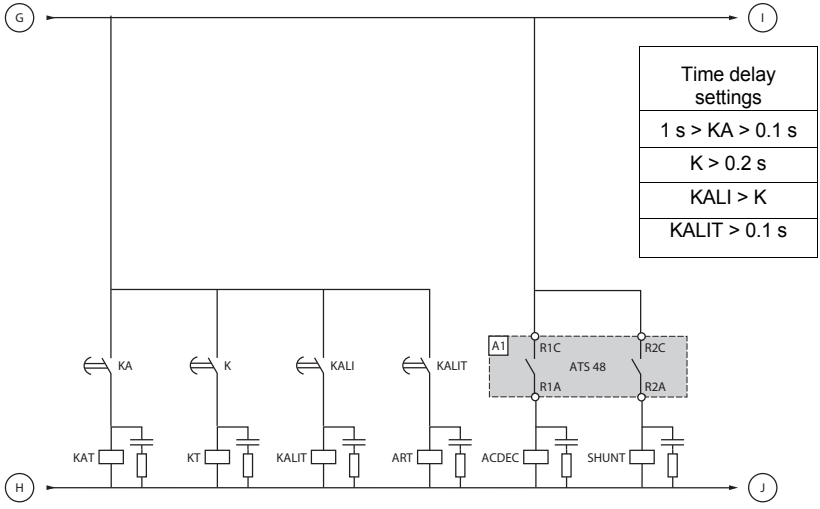

BPMn: "Run" button motor n
BPAn: "Stop" button motor n

R1 must be configured as an isolating relay (r1 = r1l)

Wait for the end of the timer KALIT between 2 consecutive stop requests

ATS 48: Non-reversing with line contactor, starting and deceleration of several cascaded motors with a single Altistart

Cascade control

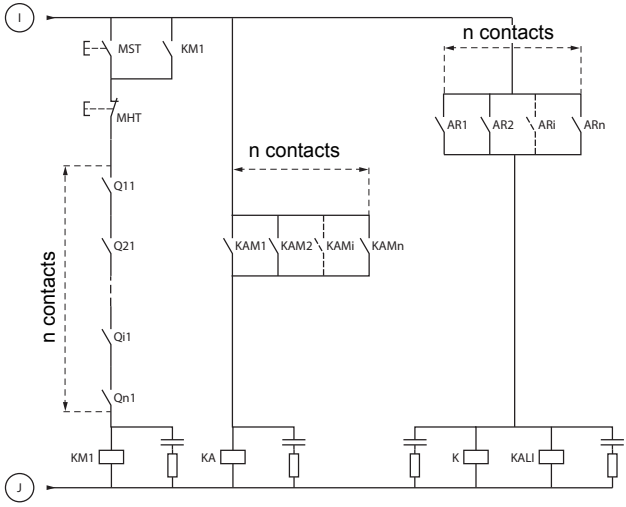

MST: General "Run" button
MHT: General "Stop" button

ATS 48: Non-reversing with line contactor, starting and deceleration of several cascaded motors with a single Altistart

Description of the complete sequence

Start with MST so that KM1 rises (line contactor)

1 - 2 - 3

Press BPM1 to start motor 1. Press BPM2 to start motor 2, press BPMn to start motor n.
When BPM1 is pressed, KAM1 rises, as does KM11 because ACDEC is activated (the ATS48 is powered by MST and KM1).
KA rises because KAM1 is closed. KAT also rises after an adjustable time delay.

4 - 5

The ATS48 starts the motor following a run command on RUN with KA and KAT.
KAM1 drops out due to KAT.
KM11 remains closed.

6 - 7

At the end of starting, R2 on the ATS48 rises, SHUNT is closed, KM12 is closed by SHUNT and KM11 remains closed.

8 - 9

After a short time R2 drops out followed by R1 (starter bypass function).
KM11 opens because ACDEC is open.
The motor continues to be powered by KM12.
ATS48 display a status code.

Follow the same procedure to start the next motor. To start motor n use BPMn and to stop motor n use BPAn. The motors can be started and stopped in any order.

To stop motor 1 press BPA1. AR1 closes

a - b - c - d

K and KALI are closed.
LI on the ATS48 receives a command from KALI and KALIT (LI must be adjusted to value LIC).
R1 and R2 on the ATS48 rise (a pulse on R2 and R1 remains closed until the motor has come to a complete stop).

e

KM11 closes.
After an adjustable time delay, KT and KALIT rise.

f

The ATS48 receives a stop command from KALIT.

g

KM12 drops out.
The ATS48 decelerates the motor.

h

R1 on the ATS48 opens when the motor has come to a complete stop.

i

KM11 opens.
The ATS48 is ready to start or stop another motor.

ATS 48: Non-reversing with line contactor, starting and deceleration of several cascaded motors with a single Altistart

Trend diagram

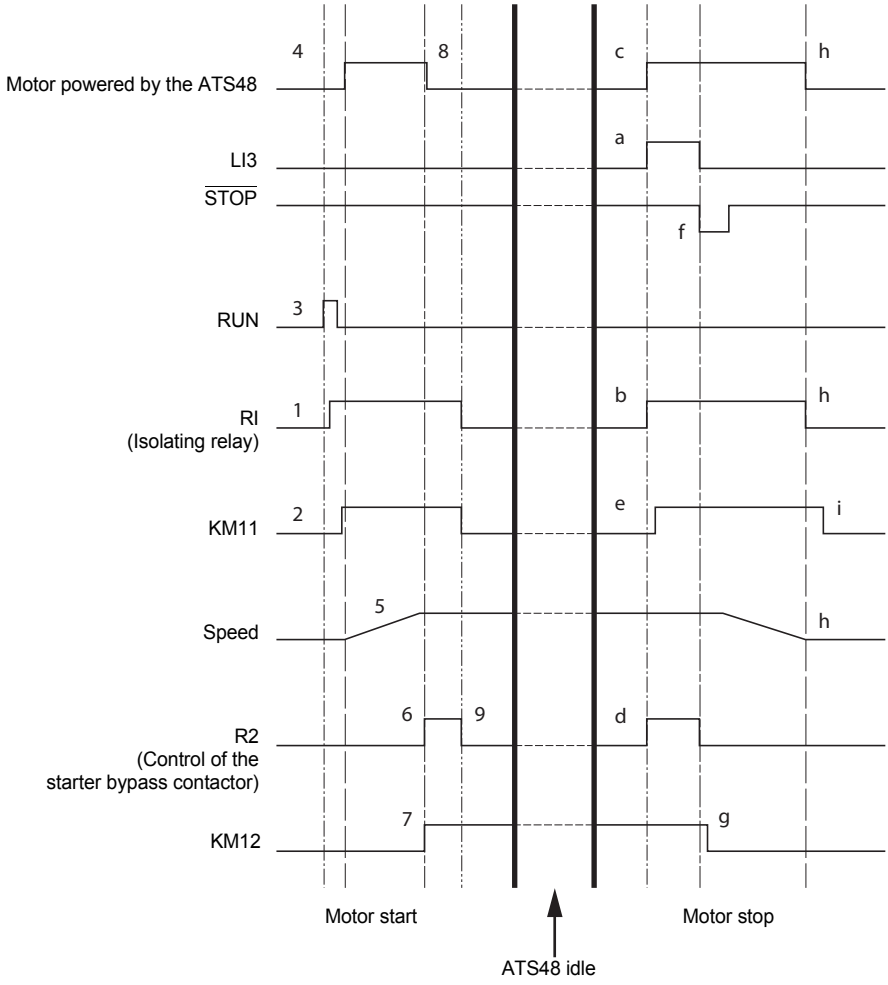

Thermal protection

Starter thermal protection

Thermal protection is provided by the PTC probe fitted on the heatsink and by calculating the temperature rise of the thyristors.

Motor thermal protection

The starter continuously calculates the temperature rise of the motor based on the controlled nominal current In and the actual current absorbed.

Temperature rises can be caused by a low or high overload with a long or short duration. The tripping curves on the following pages are based on the relationship between the starting current Is and the (adjustable) motor current In.

Standard IEC60947-4-2 defines the protection classes giving the starting capacities of the motor (warm or cold start) without thermal faults. Different protection classes are given for a COLD state (corresponding to a stabilised motor thermal state, switched off) and for a WARM state (corresponding to a stabilised motor thermal state, at nominal power).

The starter is factory-set to protection class 10.
This protection class can be modified using the PrO menu.

The thermal protection displayed by the starter corresponds to the iron time constant.

- An overload alarm is activated if the motor exceeds its nominal temperature rise threshold (motor thermal state = 110%).
- A thermal fault stops the motor if it exceeds the critical temperature rise threshold (motor thermal state = 125%).

In the event of a prolonged start, the starter can trip on a fault or thermal alarm even if the value displayed is less than the trip value.

The thermal fault can be indicated by relay R1 if thermal protection has not been disabled.

After the motor has stopped or the starter has been switched off, the thermal state is calculated even if the control circuit is not powered. The Altistart thermal control prevents the motor from restarting if the temperature rise is too high.

If a special motor is used (flameproof, submersible, etc.) thermal protection should be provided by PTC probes.

Motor thermal protection

Cold curves

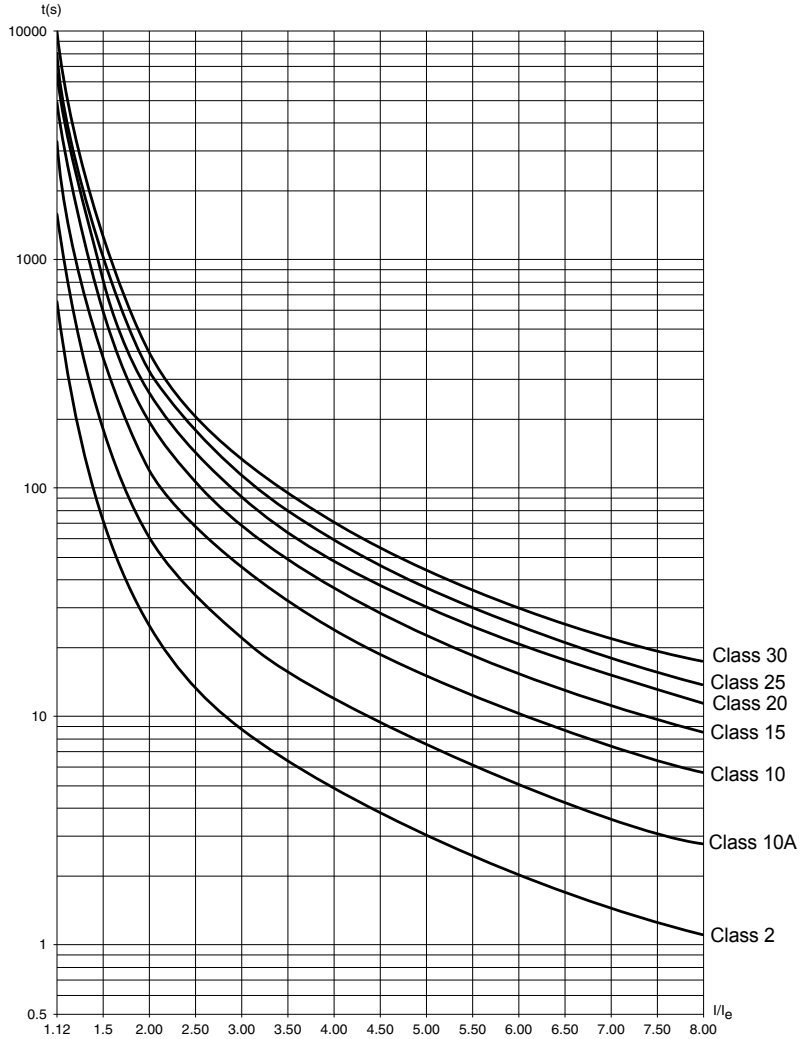

Trip time for a standard application (class 10)		Trip time for a severe application (class 20)	
3 In	5 In	3.5 In	5 In
46 s	15 s	63 s	29 s

Motor thermal protection

Warm curves

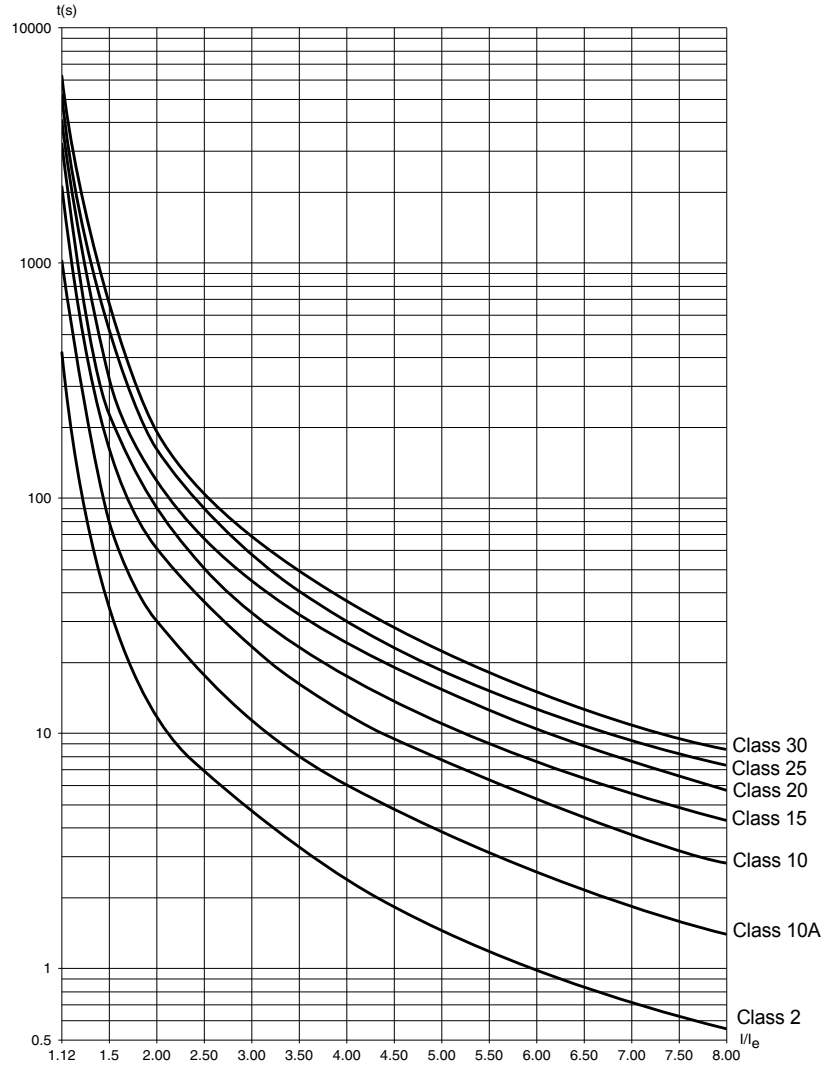

Trip time for a standard application (class 10)		Trip time for a severe application (class 20)	
3 In	5 In	3.5 In	5 In
23 s	7.5 s	32 s	15 s

Motor thermal protection with PTC probes

PTC probes integrated in the motor to measure its temperature can be connected to the control card terminals. This analog value is managed by the starter.

The "PTC probe thermal overshoot" value can be processed and used in two ways:
- stop in the event of a fault if the signal is active
- activate an alarm if the signal is active. This alarm can be displayed in a starter status word (serial link) or on a configurable logic output.

Note:
PTC probe protection does not deactivate the motor thermal protection provided by the calculation. Both types of protection can operate in parallel.

Display unit and programming

Functions of the keys and the display

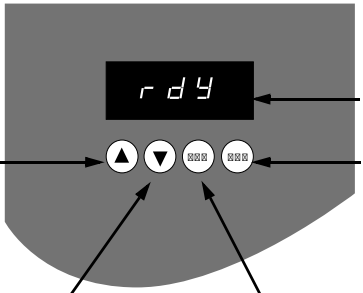

- 3 seven-segment displays
- Returns to the previous menu or parameter, or increases the displayed value
- Enters a menu or a parameter, or saves the displayed parameter or value
- Goes to the next menu or parameter, or decreases the displayed value
- Exits a menu or parameter, or aborts the displayed value to return to the previous value in the memory

Pressing ▲ or ▼ does not store the choices.

Store, save the displayed choice: ENT

The display flashes when a value is stored.

Display principle

The display principle for numbers differs depending on the maximum scale of the parameter and its value.

- Max. scale 9990:
  - values 0.1 to 99.9 (examples: 05.5 = 5.5; 55.0 = 55; 55.5 = 55.5)
  - values 100 to 999 (example: 555 = 555)
  - values 1000 to 9990 (example: 5.55 = 5550)
- Max. scale 99900:
  - values 1 to 999 (examples: 005 = 5; 055 = 55; 550 = 550)
  - values 1000 to 9990 (example: 5.55 = 5550)
  - values 10000 to 99900 (example: 55.5 = 55500)

Accessing menus

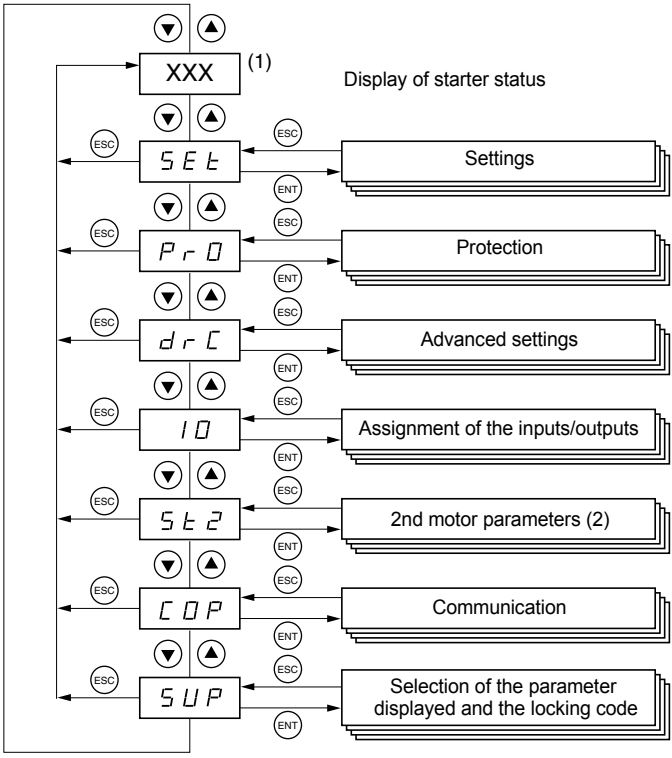

(1) Management of the displayed value "XXX" is given in the table on the next page.
(2) Menu St2. is only visible if the "second set of motor parameters" function is configured.

Accessing parameters

Store, save the displayed choice: ENT
The display flashes when a value is stored.

Example:

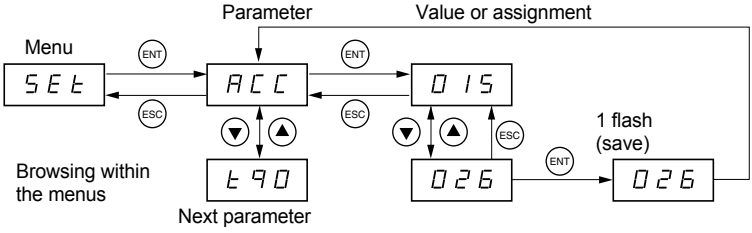

Display of starter status

The displayed value "XXX" follows the following rules:

Value displayed	Condition
Fault code	Faulty starter
nLP rdY	Starter without run command and: • Power not supplied • Power supplied
tbS	Starting time delay not elapsed
HEA	Motor heating in progress
Monitoring parameter selected by the user (SUP menu). Factory setting: motor current	Starter with run command
brL	Starter braking
Stb	Waiting for a command (RUN or STOP) in cascade mode

When current limiting is applied to the starter, the displayed value "XXX" flashes.

It is still possible to modify the parameters even if a fault occurs on the starter.

Remote terminal option

The **VW3 G48101** remote terminal can be mounted on the door of the wall-mounted or floor-standing enclosure with a seal which offers IP 65 protection. It has a 3 m cable with connectors and communication is via the RJ45/ Modbus connection on the starter (**see the manual supplied with the terminal**). It has the same display and the same programming buttons as the Altistart 48 with the addition of a menu access locking switch.

View of the front panel:

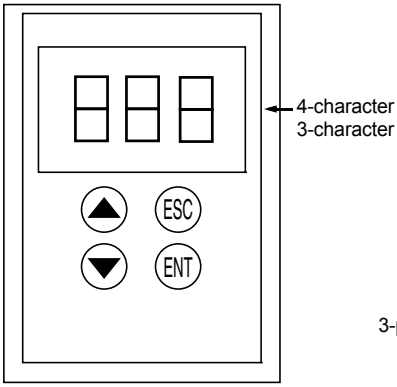

View of the rear panel:

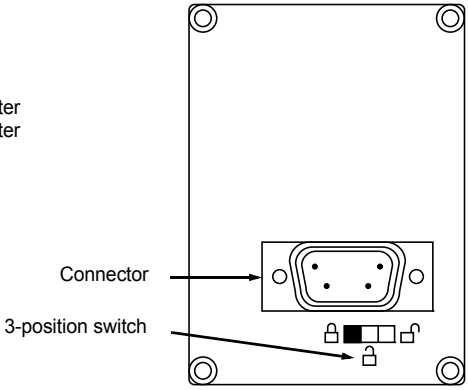

Control of the remote terminal switch

The 3-position switch on the terminal is used as follows:

- locked position : only the monitoring parameters can be accessed. When the starter is running, it is not possible to select a different parameter to be displayed.
- partly locked position : limited access to the SEt, PrO and SUP menu parameters.
- unlocked position : all parameters can be accessed.

Any display restrictions applied to the starter by the remote terminal switch will still be in force once the starter has been disconnected and even after it has been switched off.

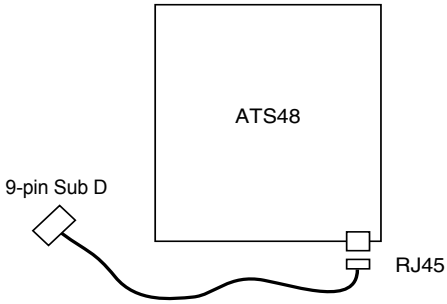

Settings menu (Set)

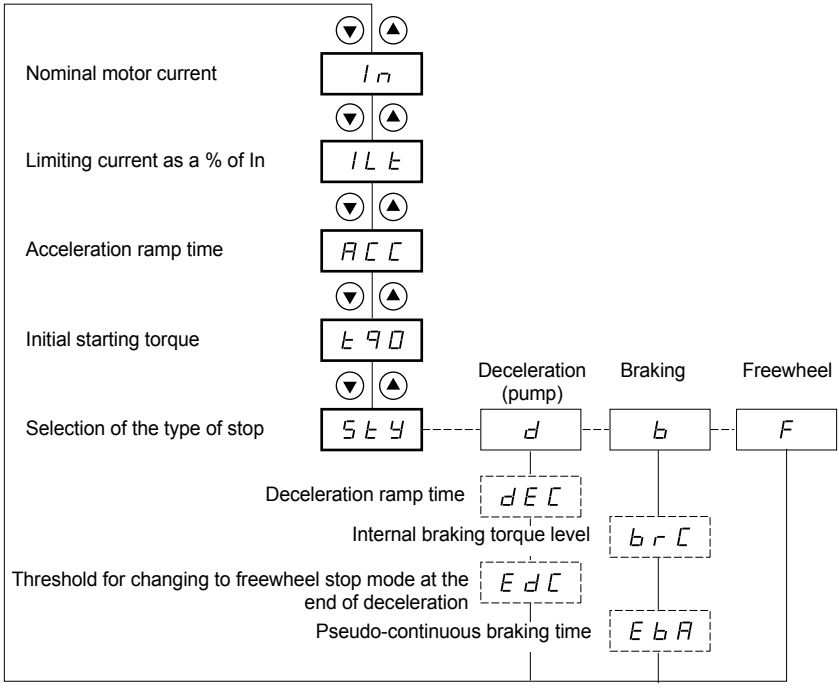

Parameters in menu

Can be selected

Parameter appears according to selection

To access the parameters, see page 128.

The settings parameters can only be modified when the motor is stopped.

Code	Description	Setting range	Factory setting
In	**Nominal motor current**	0.4 to 1.3 ICL	(1)
	Adjust the value of the nominal motor current indicated on the rating plate, even if the starter is connected in the motor delta winding (dLt in the PrO menu). Check that the current is between 0.4 and 1.3 ICL (ICL: starter rating).		
ILt	**Limiting current**	150 to 700% of In, limited to 500% of ICL	400% of In
	The limiting current ILt is expressed as a % of In. With the maximum load, the ILt should be set at a high enough value to allow the motor to start. If the application requires more than 500% Icl, the sarter must be oversized. It is limited to 500% of ICL (starter rating, see “Starter-motor combinations”, page 96.) Limiting current = ILt x In. Example 1: In = 22 A, ILt = 300%, limiting current = 300% x 22 A = 66 A Example 2: ATS 48C21Q, with ICL = 210 A In = 195 A, ILt = 700%, limiting current = 700% x 195 = 1365, limited to 500% x 210 = 1050 A		
ACC	**Acceleration ramp time**	1 to 60 s	15 s
	This is the rise time of the starter torque between 0 and the nominal torque Tn, i.e. the gradient of the torque ramp on acceleration. 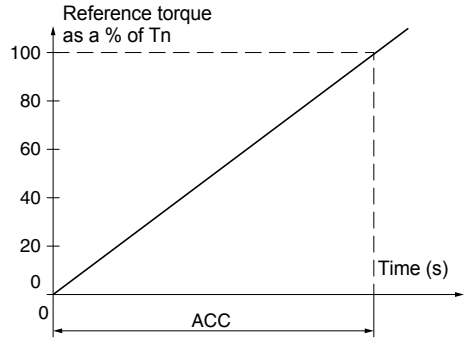		

(1) Factory setting of In corresponding to the usual value of a 4-pole 400 V standardised motor with class 10 protection (for ATS 48•••Q).
Factory setting of In corresponding to the usual value of a 460 V standardised motor in accordance with NEC and with class 10 protection (for ATS 48•••Y).

Code	Description	Setting range	Factory setting
tq0	**Initial starting torque**	0 to 100% of Tn	20%
	Initial torque setting during the starting phases, varies from 0 to 100% of the nominal torque. Initial starting torque should be set in order to produce motor rotation as soon as the order is applied to the motor. If set too low, the motor will rotate later after the “Run” signal. 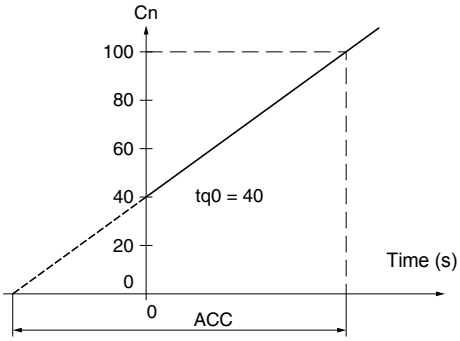 		
StY	**Selection of the type of stop**	d-b-F	-F-
	Three types of stop are possible: **- d -**: Soft stopping by control of torque. The starter applies a motor torque in order to decelerate prgressively on the ramp, avoiding a rapid stop. This type of stop reduces the risk of water hammer on a pump. **- b -**: Dynamic braking stop: The starter generates a braking torque in the motor which will slow the motor down if there is considerable inertia. **- F -**: Freewheel stop: No torque is applied to the motor by the starter. Note : If the starter is connected to "delta in the motor", stop type b is not permitted.		

Code	Description	Setting range	Factory setting
dEC	**Deceleration ramp time**	1 to 60 s	15 s
	This parameter can only be accessed if StY = -d-. Can be used to set a time between 1 to 60 s to switch from the estimated torque to zero torque (= gradient of the torque ramp on deceleration when a -d- stop is applied). This modifies the progression of the deceleration and avoids hydraulic shocks in pump applications by modifying the gradient of the torque reference. Estimated torque as a % of the nominal torque 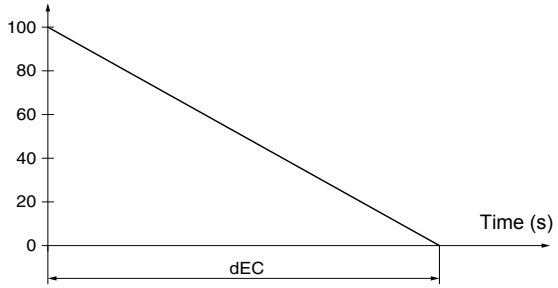 		
EdC	**Threshold for changing to freewheel stop mode at the end of deceleration**	0 to 100%	20%
	This parameter can only be accessed if StY = -d- and if the CLP parameter in the drive menu (drC) is still set to the factory setting (On). Can be used to set the final torque level between 0 and 100% of the estimated torque at the start of deceleration. In pump applications, deceleration control is not necessarily effective below a load level set by Edc. If the estimated torque at the start of deceleration is below 20, i.e. 20% of the nominal torque, controlled deceleration is not activated, and the motor changes to freewheel mode. Estimated torque as a % of the nominal torque 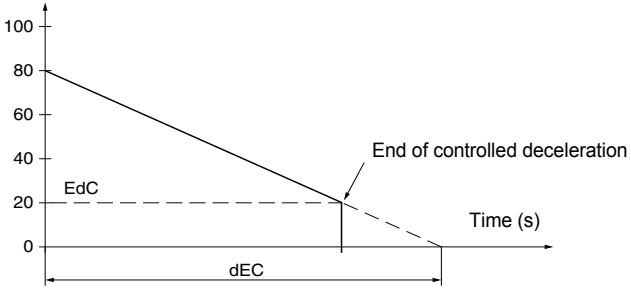 		

Code	Description	Setting range	Factory setting
brC	**Internal braking torque level**	0 to 100%	50%
	This parameter can only be accessed if StY = -b-. For stop type -b-, used to adjust the braking intensity. Braking is active up to 20% of the nominal speed. The total stop of the motor is configured by adjusting the injection time of the pseudo-continuous current in the motor (on two phases). See the next parameter EbA. 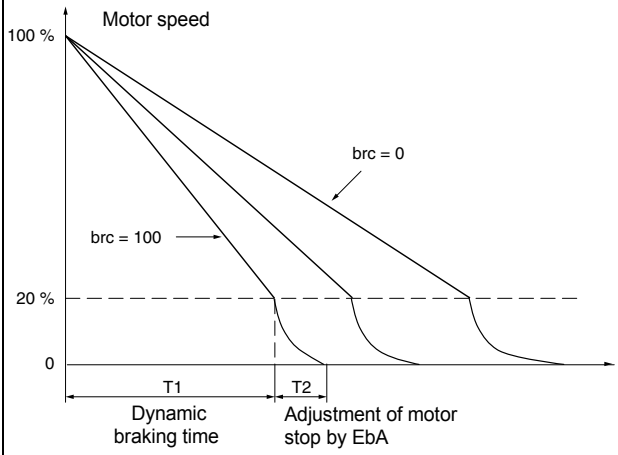 Pseudo-continuous injection time: T2 = T1 x EbA Note: Time T1 is not determined by brC. T1 is the time required in seconds for the motor to fall from 100% of the nominal speed to 20% (depends on the motor and application characteristics).		
EbA	**Pseudo-continuous braking time**	20 to 100%	20%
	This parameter can only be accessed if StY = -b-. For stop type -b-, adjustment of the current injection time at the end of braking. Can be used to adjust the current injection time. Can be set at 20 to 100% of the dynamic braking time (T1). Example: Dynamic braking = 10 s (T1) The stopping time can vary from 2 to 10 s (T2) EbA = 20 Corresponds to an injection time of 2 s EbA = 100 Corresponds to an injection time of 10 s Factory setting: 20		

Protection menu (PrO)

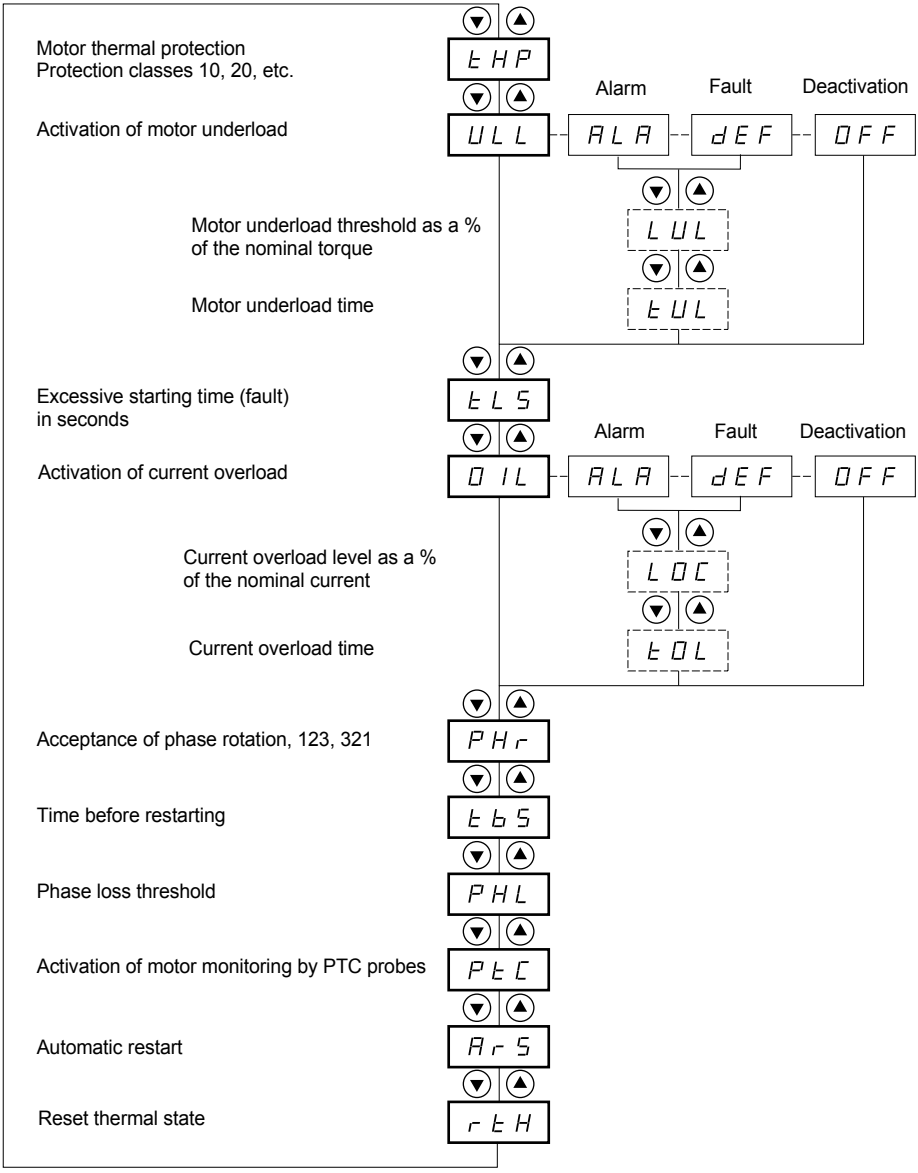

Parameters in menu

Can be selected

Parameter appears according to selection

To access the parameters, see page 128.

The protection parameters can only be modified when the motor is stopped.

Code	Description	Setting range	Factory setting
tHP	**Motor thermal protection**		10
	See “Thermal protection”, page 123. 30: class 30 25: class 25 20: class 20 (severe application) 15: class 15 10: class 10 (standard application) 10A: class 10A 2: sub-class 2 OFF: no protection		
ULL	**Activation of motor underload**		OFF
	If the motor torque is less than an adjustable threshold LUL for a period of time longer than an adjustable value tUL: - ALA: an alarm is activated (internal bit and configurable logic output) - dEF: the starter is locked and the ULF fault is displayed - OFF: no protection 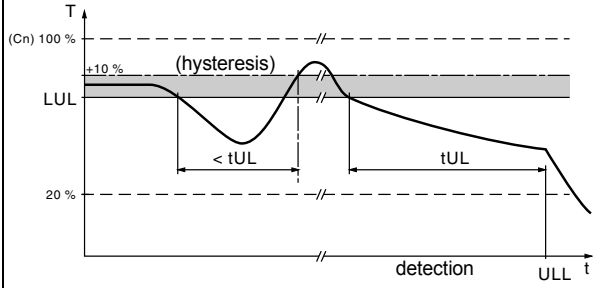		
LUL	**Motor underload threshold**	20% to 100% of Tn	60%
	This parameter is not available if ULL = OFF. LUL can be set at between 20% and 100% of the nominal motor torque.		
tUL	**Motor underload time**	1 to 60 s	60 s
	This parameter is not available if ULL = OFF. Time delay tUL is activated as soon as the motor torque falls below threshold LUL. It is reset to zero if the torque rises above this threshold LUL by + 10% (hysteresis).		
tLS	**Excessive starting time**	10 to 999 s or OFF	OFF
	If the starting time exceeds the value of tLS, the starter is locked and displays the fault StF. The conditions for the end of starting are: line voltage applied to the motor (min. firing angle) and motor current less than 1.3 In. - OFF: no protection		

The configuration of a monitoring alarm (ALA) indicates the presence of a fault but will not directly protect the installation

Code	Description	Setting range	Factory setting
OIL	**Activation of current overload**		OFF
	Function active only in steady state If the motor current exceeds an adjustable threshold LOC for a period of time longer than an adjustable value tOL: - ALA: an alarm is activated (internal bit and configurable logic output) - dEF: the starter is locked and the OLC fault is displayed - OFF: no protection 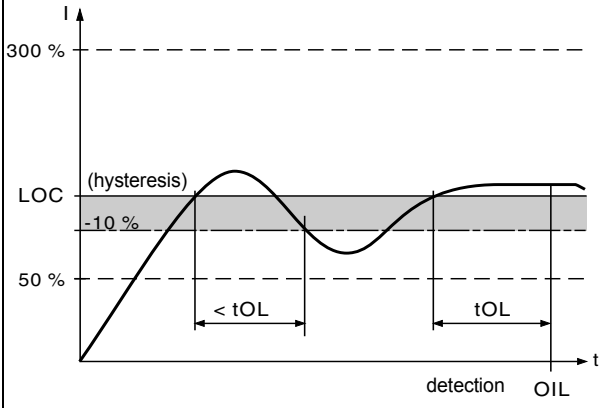		
LOC	**Current overload threshold**	50% to 300% of In	80%
	This parameter is not available if OIL = OFF. LOC can be set at between 50% and 300% of the nominal motor current.		
tOL	**Current overload time**	0.1 to 60 s	10 s
	This parameter is not available if OIL = OFF. Time delay tOL is activated as soon as the motor current rises above threshold LOC. It is reset to zero if the current falls below this threshold LOC again by at least 10% (hysteresis).		

The factory configuration of a monitoring alarm (ALA) indicates the presence of a fault but will not directly protect the installation

Protection menu (PrO)

Code	Description	Setting range	Factory setting
PHr	**Protection against line phase inversion**	321 or 123 or no	no
	If the line phases are not in the order configured, the starter locks and displays the fault PIF. - 321: reverse (L3 - L2 - L1) - 123: forward (L1 - L2 - L3) - no: no monitoring		
tbS	**Time before starting**	0 to 999 s	2 s
	Avoids starts in quick succession which may overheat the motor. The time delay starts when the motor changes to freewheel mode. In 2-wire control, the motor is restarted after the time delay if the RUN command input is still activated. In 3-wire control, the motor is restarted after the time delay if a new RUN command is sent (rising edge). The starter displays "tbS" during the time delay.		
PHL	**Phase loss threshold**	5 to 10%	10%
	If the motor current falls below this threshold in one phase for 0.5 s or in all three phases for 0.2 s, the starter locks and displays the fault PHF. Can be set at between 5 and 10% of the ICL starter rating.		
PtC	**Activation of motor monitoring by PTC probes**		OFF
	The PTC probes on the motor must be connected to the correct analog input. This protection is independent of the calculated thermal protection (tHP parameter). Both types of protection can be used simultaneously. - ALA: an alarm is activated (internal bit and assignable logic output) - dEF: the starter is locked and the OtF fault is displayed - OFF: no protection		
Ars	**Automatic restart**	On - OFF	OFF
	After locking on a fault, if the fault has disappeared and the other operating conditions permit the restart. A series of automatic attempts are made to restart the starter at intervals of 60 s. If a restart has not been possible after 6 attempts, the procedure is abandoned and the starter remains locked until it is switched off then switched on again or reset manually (see "Faults - causes - remedies" page 159). The following faults permit this function: PHF, FrF, CLF, USF. The starter fault relay remains activated if this function is active. The run command must be maintained. This function can only be used in 2-wire control. - OFF: Function inactive - On: Function active ⚠ **Check that an accidental start will not endanger personnel or equipment in any way**		
rtH	**Reset motor thermal state calculated by the starter**	no - YES	no
	- no: Function inactive - YES: Function active		

⚠ **The factory configuration of a monitoring alarm (ALA) indicates the presence of a fault but will not directly protect the installation**

Advanced settings menu (drC)

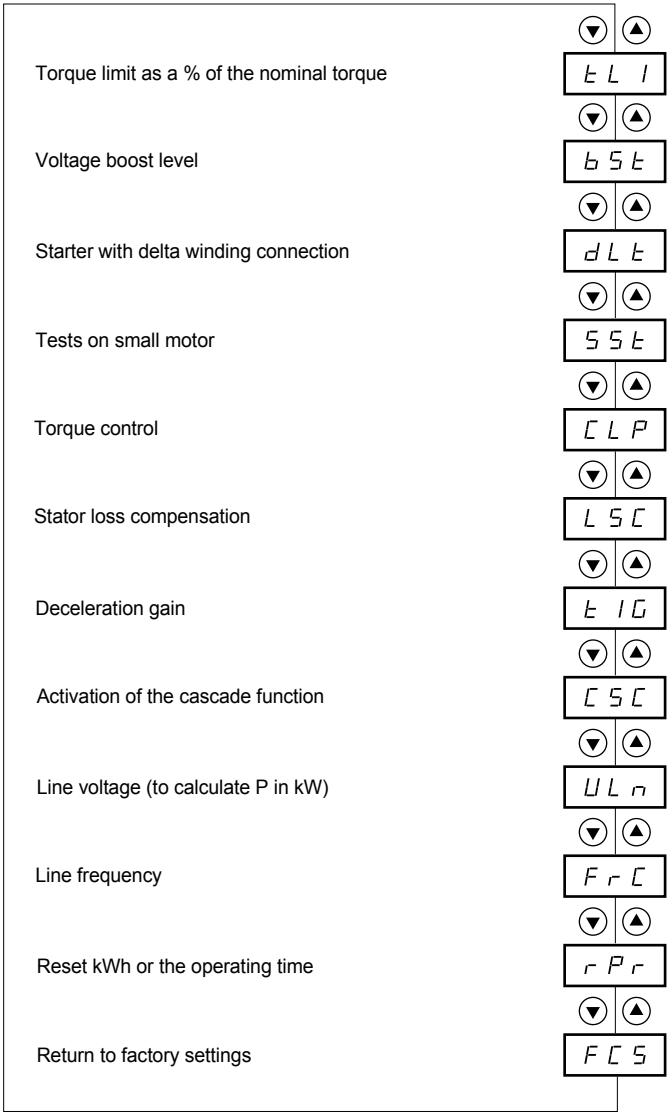

Parameters in menu

The Advanced setting parameters can only be modified when the motor is stopped.

Code	Description	Setting range	Factory setting
tLI	**Torque limit**	10 to 200% or OFF	OFF
	Can be used to limit the torque reference to avoid regenerative behaviour in applications with high inertia. Can be used for constant torque starting if tqO = tLI. - OFF: no limit - 10 to 200: limit set as a % of the nominal torque		
bSt	**Voltage boost level**	50 to 100% or OFF	OFF
	An adjustable voltage can be applied when a run command is present for 100 ms. Once this time has elapsed, the starter follows a standard acceleration ramp starting at the initial torque value set (tq0). This function can be used to avoid any "starting" torque (phenomenon caused by friction on stopping or by mechanical play). - OFF: Function inactive - 50 to 100: setting as a % of the nominal motor voltage 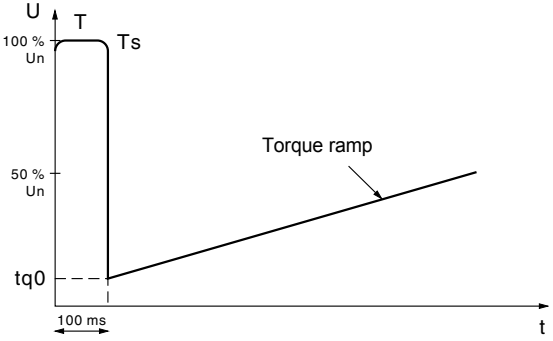 **In the case of overrating the starter (Im motor> Im ATS48), a value of the parameter bSt too high can cause the starter to trip in OCF**		
dLt	**Starter with delta winding connection**	on - OFF	OFF
	This configuration will permit a rating increase of 1.7 in the starter power but does not permit braking or deceleration. - OFF: normal line torque - On: motor with delta winding connection The nominal motor current In is the same as that specified on the motor rating plate and the current displayed corresponds to the line current of the line supply. The nominal current value In (SEt menu) is the same as that specified on the motor rating plate for the delta connection. The starter carries out the conversion itself to control the current in the windings. This parameter can only be accessed for ATS 48•••Q or ATS 48••• YS316 starters. **• With this function, dynamic braking stop is not possible.** **• Cascading is not possible** **• Preheating is not possible** **•The wiring diagram page 115 must be respected**		

Code	Description	Setting range	Factory setting
SSt	**Tests on small motor**	On - OFF	OFF
	To check the starter in a testing or maintenance environment, **on a motor** whose power is very much lower than the starter rating (in particular for high power starters). The torque control parameter CLP is automatically deactivated. - OFF: function inactive - On: function active **Note:** • **SSt returns to the OFF state as soon as the control voltage is disconnected. On the next power up, the PHF fault and the CLP parameter return to their initial configuration.** • **SST is only dedicated for maintenance and testing of the starter.**		
CLP	**Torque control** (type of control)	On-OFF	On
	- OFF: function inactive - On: function active In the On position, starting and deceleration follow the torque ramp. In the OFF position, starting and deceleration are controlled by voltage variation. Voltage control is recommended for applications which use motors in parallel on one starter or a motor whose power is very low in relation to the starter rating (use of an undersized motor to test the starter) (CLP = OFF).		
LSC	**Stator loss compensation**	0 to 90%	50%
	Parameter active in acceleration phases (and deceleration phases if StY = -d-). In the event of torque oscillations, reduce this parameter gradually until the device is functioning correctly. Oscillations are most common if the starter is connected in the motor delta winding or in motors with excessive slip.		
tIG	**Deceleration gain** (for torque control)	10 to 50%	40%
	This parameter can only be accessed if CLP = On and if the StY parameter (SEt Settings menu) = -d-. Can be used to eliminate instability during deceleration. Adjust the parameter in accordance with the oscillations.		
CSC	**Activation of the cascade function**	On-OFF	OFF
	See page 122 - On: function active - OFF: function inactive This parameter can only be accessed if relay R1 has previously been assigned to the "isolating relay" function and if the "forced freewheel stop", "starter in the motor delta winding" and "preheating" functions are not configured. Assign an input LI = LIC. 255 motors max.		
ULn	**Line voltage**	170 to 460 V (ATS48••Q) 180 to 790 V (ATS48••Y)	400 V (ATS48••Q) 460 V (ATS48••Y)
	This parameter is used to calculate the power displayed (LPr and LAP parameters from the SUP menu). The display will only be accurate if this parameter has been set correctly.		

Code	Description	Adjustment range	Factory setting
FrC	**Line frequency**	50-60-AUt	AUt
	- 50: 50 Hz (monitoring tolerance of frequency fault FrF = ± 20%). - 60: 60 Hz (monitoring tolerance of frequency fault FrF = ± 20%). - AUt: automatic recognition of the line frequency by the starter with frequency fault monitoring tolerance FrF = ± 5%. Selections 50 and 60 are recommended if the power supply is provided by a generating set, given their high tolerance.		
rPr	**Reset kWh or the operating time**	no-APH-trE	no
	- no: function inactive - APH: kWh reset to zero (1) - trE: operating time reset to zero The reset command must be confirmed with ENT. APH and trE take effect immediately. The parameter then automatically returns to no.		
FCS	**Return to factory settings**	no-YES	no
	Used to reset all parameters to their factory settings. - no: function inactive - YES: function active, must be pressed and held down (for approx. 2 s) in order to be taken into account. The display flashes to confirm. The FCS parameter is then automatically reset to no by pressing ESC. **This parameter cannot be modified via the remote terminal.**		

(1) This information « kWh consumed » is only visible with the PowerSuite software workshop or online with Modbus (address W4074).

I/O menu (IO)

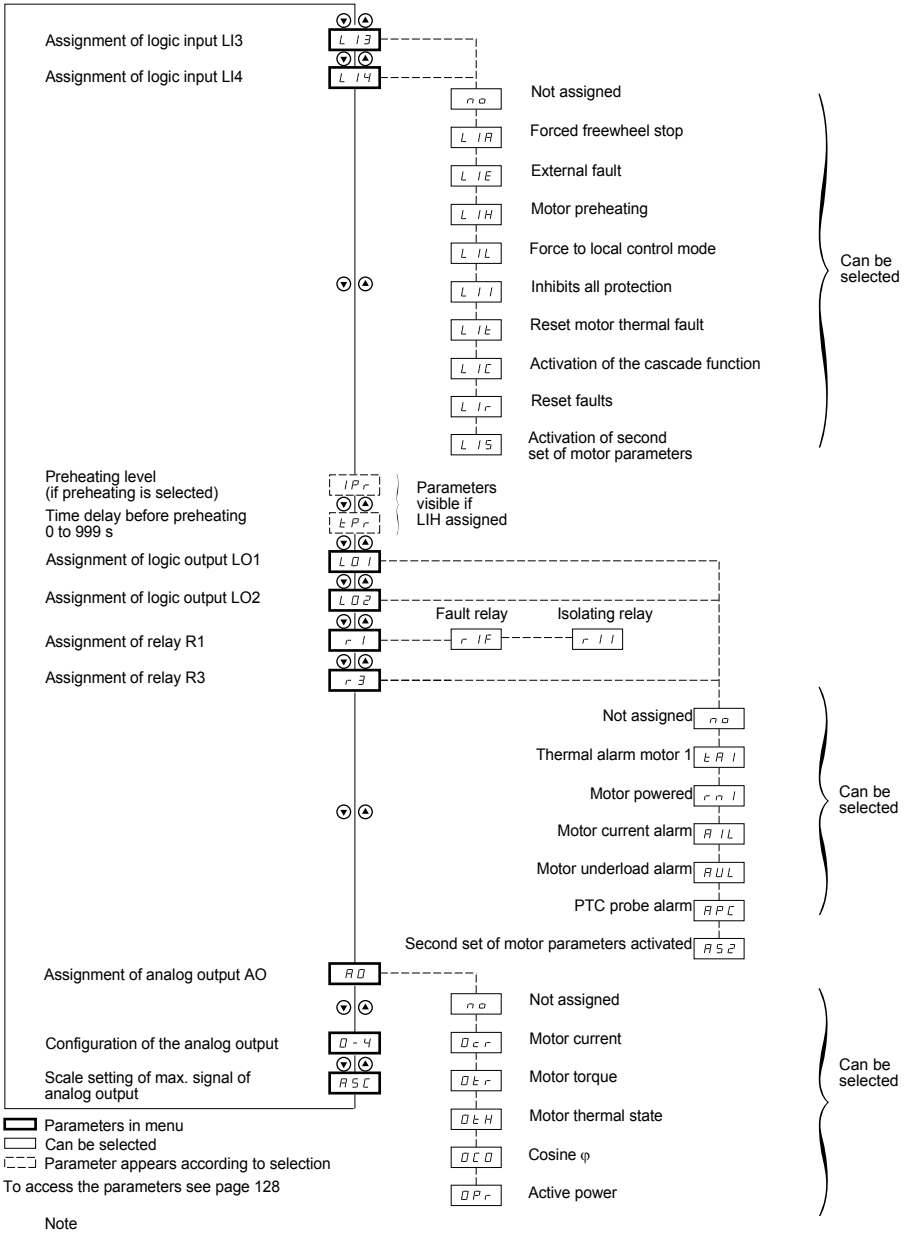

To access the parameters see page 128

Note

Logic input RUN: cannot be assigned
Logic input STOP: cannot be assigned
Starter bypass contactor control: cannot be assigned (R2)

The I/O parameters can only be modified when the motor is stopped.

Code	Description	Setting range	Factory setting
L I3 L I4	**Logic inputs**		LIA LIL

The selected function is active if the input is powered up.
- no: not assigned.
- LIA: forced freewheel stop as soon as a STOP command is received. This selection does not appear if the CSC parameter in the drC menu is set to "On". Forces the configuration of a freewheel type stop, but does not control the stop.
- LIE: external fault. Enables the starter to detect an external user fault (level, pressure, etc.). The motor comes to a freewheel stop and the starter displays EtF.
- LIH: (1) motor preheating. This selection does not appear if the CSC parameter in the drC menu is set to "On". Used to prevent the motor from freezing or to prevent temperature deviations which may cause condensation. Once the motor has stopped an adjustable current IPr flows through it after an adjustable time delay tPr, if the input is active. This current heats the motor without causing it to rotate. IPr and tbr must be adjusted (see below).

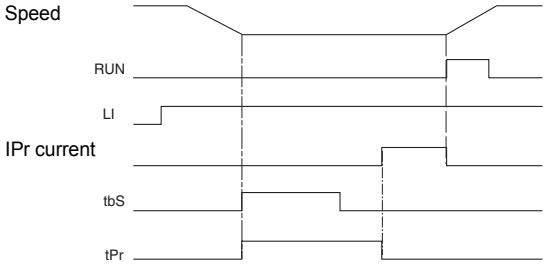

Preheating starts when the input is activated and the motor has stopped, after time delays tPr and tbS (PrO menu) have elapsed. Preheating stops if the input is deactivated, if a run command is sent or if the STOP input is activated.
- LIL: force to local control mode. If a serial link is used, changes from line mode (control via serial link) to local mode (control via terminals).
- LII: (1) inhibits all protection. Warning: This type of use invalidates the starter warranty. Used to override the starter in the event of an emergency (smoke extraction system for example).
- LIt: reset motor thermal fault
- LIC: activation of the cascade function. In this case motor thermal protection is disabled and relay R1 must be configured as an isolating relay. Can be used to start and decelerate several identical motors one after the other with a single starter (see application diagram).
- LIr: reset faults which can be reset
- LIS: activation of second set of motor parameters. Used to start and decelerate two different motors one after the other or one motor with two different configurations using a single starter.

(1) In order for this assignment o take effect, ENT must be pressed for 10 s (confirmed by flashing display).
This parameter cannot be modified via the remote terminal.

Code	Description	Setting range	Factory setting
IPr	**Preheating level**	0 to 100%	0%
	This parameter appears after LI3 or LI4 have been assigned to function LIH: motor preheating. It can be used to set the preheating current. Use a true value current reading ammeter to set the motor current level. Parameter In has no effect on the current IPr. **CAUTION** **RISK OF DAMAGE TO THE MOTOR** If the line frequency is fluctuating, it is mandatory to use an external device to monitor the frequency and switch off the preheating function in case of fluctuations. **Failure to follow these instructions can result in equipment damage.**		
tPr	**Time delay before preheating**	0 to 999 mn	5 mn
	This parameter appears after LI3 or LI4 have been assigned to function LIH: motor preheating. Preheating starts when the input is activated, after time delays tPr and tbS (PrO menu) have elapsed.		
LO1 LO2	**Logic outputs**		tAI rnI
	- no: not assigned. - tAI: motor thermal alarm. See page 123. - rnI: motor powered (indicates that there may be current in the motor). - AIL: motor current alarm (threshold OIL and time tOL of PrO menu exceeded). See "Function active only in steady state", page 138. - AUL: motor underload alarm (threshold LUL and time tUL of PrO menu exceeded). See page 137. - APC: motor PTC probe alarm. See "Activation of motor monitoring by PTC probes", page 139. - AS2: second set of motor parameters activated. See LIS "Logic inputs", page 145.		
r1	**Relay R1**		rIF
	- r1F: fault relay. Relay R1 is activated when the starter is powered up (minimum CL1/CL2 control). Relay R1 is deactivated when a fault occurs and the motor switches to freewheel mode. See the special case when the automatic restart function is activated and Faults - causes - remedies page 160 to 164. - r1I: isolating relay. Relay R1 is designed to control the line contactor on the basis of the RUN and STOP commands and to indicate faults. Relay R1 is activated by a RUN command (or a preheating command). It is deactivated at the end of braking or deceleration or when the motor switches to freewheel mode after a STOP command. It is also deactivated when a fault occurs. The motor switches to freewheel mode at this point.		
r3	**Relay R3**		rnI
	- no: not assigned. - tAI: motor thermal alarm. See page 123. - rnI: motor powered (indicates that there may be current in the motor). - AIL: motor current alarm (threshold OIL and time tOL of PrO menu exceeded). See "Function active only in steady state", page 138. - AUL: motor underload alarm (threshold LUL and time tUL of PrO menu exceeded). See page 137. - APC: motor PTC probe alarm. See "Activation of motor monitoring by PTC probes", page 139. - AS2: second set of motor parameters activated. See LIS "Logic inputs", page 145.		

End of starting relay R2 (cannot be assigned)

The end of starting relay R2 is activated when the starter is powered up, no faults are present and the motor has completed the start-up phase. It is deactivated in the event of a stop request or a fault. It has one normally open contact (N/O).

It can be used to bypass the ATS 48 at the end of the starting phase.

Code	Description	Setting range	Factory setting
AO	**Analog output**		OCr
	- no: not assigned - OCr: motor current - Otr: motor torque - OtH: motor thermal state - OCO: cosine φ - OPr: active power		
O4	**Configuration of the type of signal supplied by output AO**	020 - 420	020
	- 020: 0 - 20 mA signal - 420: 4 - 20 mA signal		
ASC	**Scale setting of max. signal of the analog output**	50 to 500%	200
	As a percentage of the nominal value of the parameter configured or of 1 for the cosine φ.		

2nd motor parameters menu (St2)

The parameters for 1st or 2nd motor are selected by the logic input (LIS). Taking into account the motor parameters selected :

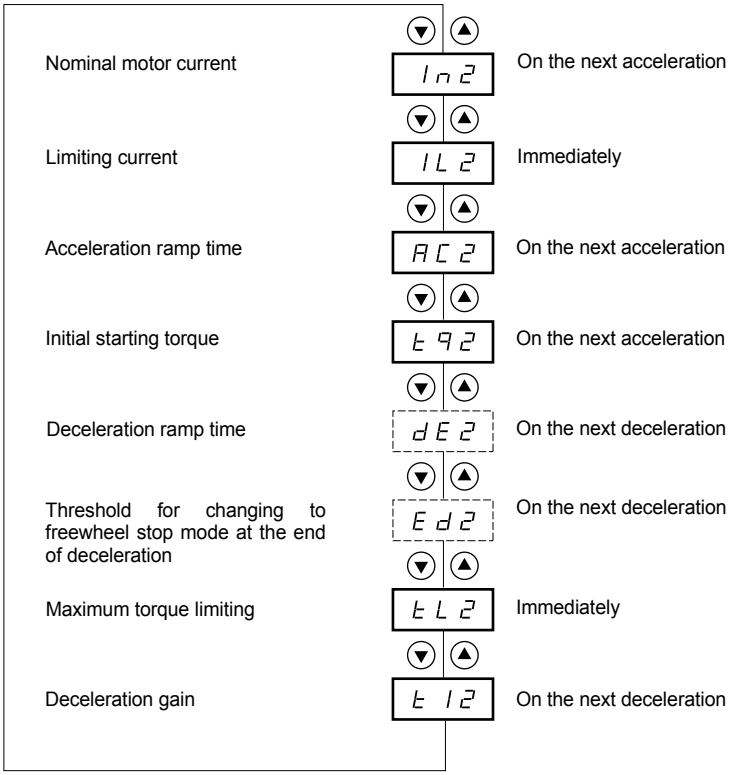

Parameters in menu

Paramèter appears according to the selection and to the assignement of StY in the SEt menu

2nd motor parameters menu (St2)

This menu is only visible if a logic input is assigned to the function for activating a second set of motor parameters (LIS) in the I/O menu.

Code	Description	Setting range	Factory setting
In2	**Nominal motor current**	0.4 to 1.3 ICL	(1)
	Adjust the value of the nominal motor current indicated on the rating plate, even if the starter is connected in the motor delta winding (PrO). Check that the current is between 0.4 and 1.3 ICL (ICL: starter rating). See “Starter-motor combinations”, page 96.		
IL2	**Limiting current**	150 to 700% of In, limited to 500% of ICL	400% of In
	The limiting current IL2 is expressed as a % of In2. It is limited to 500% of ICL (starter rating, see “Starter-motor combinations”, page 96). Limiting current = IL2 x In2 Example 1: In2 = 21 A, IL2 = 300%, limiting current = 300% x 22 A = 66 A Example 2: ATS 48C21Q, with ICL = 210 A In2 = 195 A, IL2 = 700%, limiting current = 700% x 195 = 1365, limited to 500% x 210 = 1050 A		
AC2	**Acceleration ramp time**	1 to 60 s	15 s
	This is the rise time of the starter torque between 0 and the nominal torque Tn, i.e. the gradient of the torque ramp on acceleration. 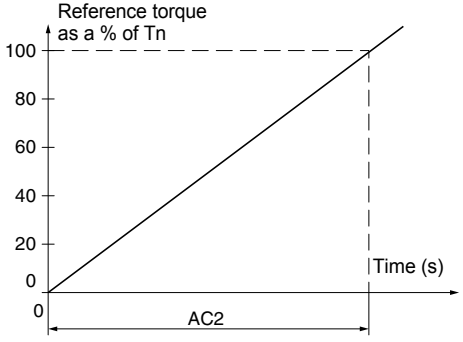 		

(1) Factory setting of In2 corresponding to the usual value of a 4-pole 400 V standardised motor with class 10 protection (for ATS 48•••Q).
Factory setting of In2 corresponding to the usual value of a 460 V standardised motor in accordance with NEC and with class 10 protection (for ATS 48•••Y).

Code	Description	Setting range	Factory setting
tq2	**Initial starting torque**	0 to 100% of Tn	20%
	Initial torque setting during the starting phases, varies from 0 to 100% of the nominal torque. 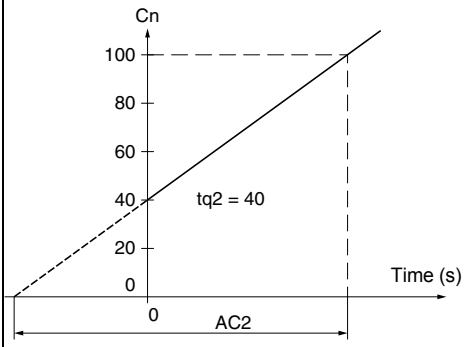		
dE2	**Deceleration ramp time**	1 to 60 s	15 s
	This parameter can only be accessed if StY = -d-. Used to set a time between 1 to 60 s to switch from the estimated torque to zero torque (= gradient of the torque ramp on deceleration when a -d- stop is applied). This modifies the progression of the deceleration and avoids hydraulic shocks in pump applications by modifying the gradient of the torque reference. 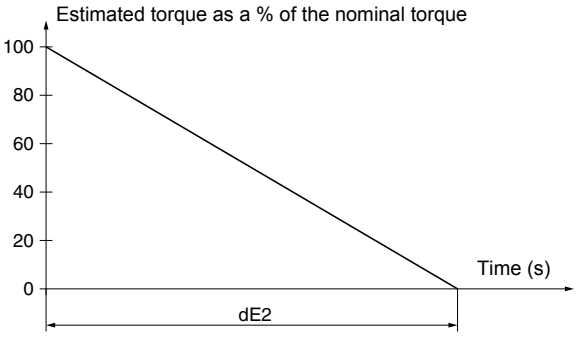		

Code	Description	Setting range	Factory setting
Ed2	**Threshold for changing to freewheel stop mode at the end of deceleration**	0 to 100%	20%
	This parameter can only be accessed if StY = -d- and if the CLP parameter in the drive menu (drC) is still set to the factory setting (On). Used to set the final torque level between 0 and 100% of the torque estimated at the beginning of deceleration. In pump applications, deceleration control is not necessarily below a load level set by Ed2. If the estimated torque at the start of deceleration is below 20, i.e. 20% of the nominal torque, controlled deceleration is not activated, and the motor changes to freewheel mode. 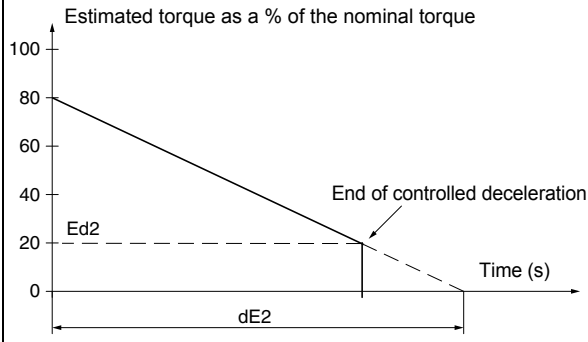 		
tL2	**Maximum torque limit**	10 to 200% or OFF	OFF
	Used to limit the torque reference to avoid regenerative behaviour in applications with high inertia. Can be used for constant torque starting if tq2 = tL2. - OFF: no limit - 10 to 200: limit set as a % of the nominal torque		
tI2	**Deceleration gain** (for torque control)	10 to 50%	40%
	This parameter can only be accessed if CLP = On and if the StY parameter (SEt Settings menu) = -d-. Used to eliminate instability during deceleration. Adjust the parameter in accordance with the oscillations.		

Communication menu (COP)

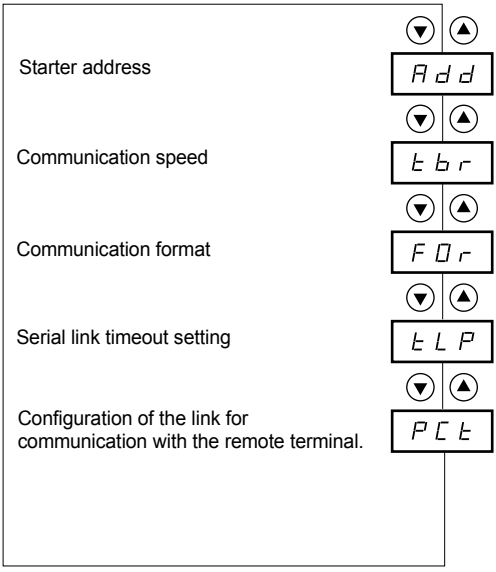

Parameters in menu

Communication menu COP

The communication menu parameters can only be modified when the motor is stopped.
The internal protocol used is Modbus.

Code	Description	Setting range	Factory setting
Add	**Starter address** by the RS485 serial link	0 to 31	0
tbr	**Communication speed** in kbps.	4.8 - 9.6 - 19.2	19.2
FOr	**Communication format** 8o1: 8 data bits, odd parity, 1 stop bit 8E1: 8 data bits, even parity, 1 stop bit 8n1: 8 data bits, no parity, 1 stop bit 8n2: 8 data bits, no parity, 2 stop bits		8n1
tLP	**Serial link timeout setting** (1)	0.1 to 60 s	5 s
PCt	**Configuration of the serial link for communication with the remote terminal** On: function active. Temporarily configures the starter (tbr and FOr) for communication with the remote terminal, to be used in case of tbr and For a not a factory value. OFF : Temporary configuration function inactive. **PCT returns to the OFF state as soon as the control voltage is disconnected. On the next power up, the tbr and FOr parameters return to their initial configuration.**		OFF

(1) Check that the time set will not interfere with the safe operation of the machine

ENGLISH

Parameter displayed menu (SUP)

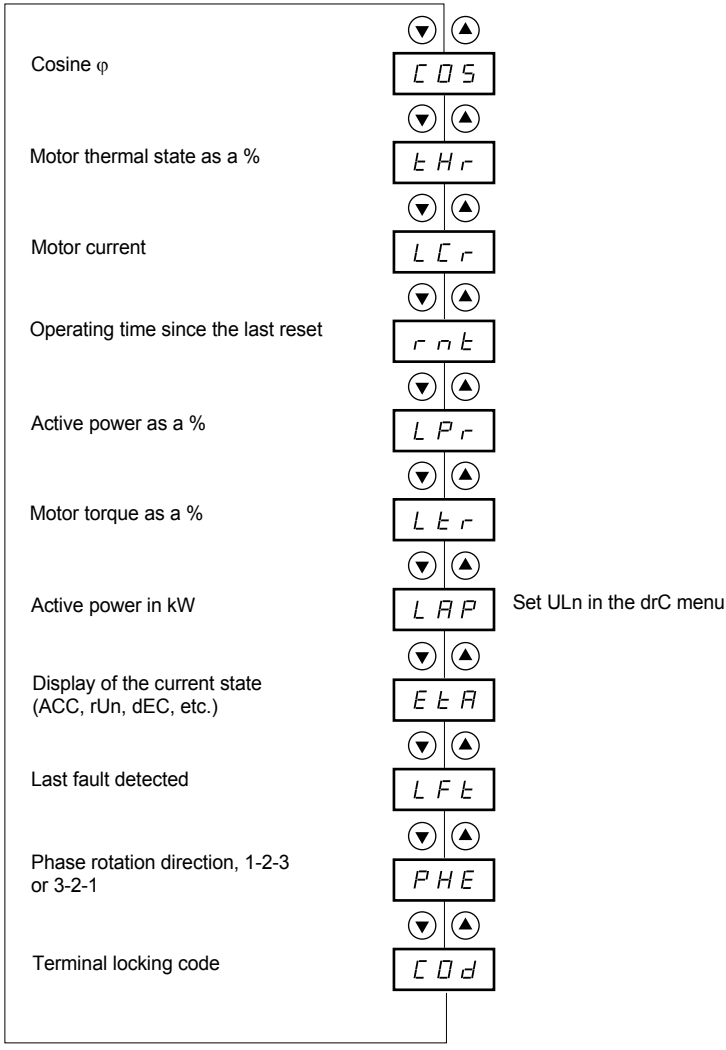

Parameter displayed menu (SUP)

The parameter to be displayed can be modified with the motor stopped or running.
The factory setting displays the motor current (parameter LCr).
The display chosen is saved by:
- Pressing the ENT key once: the choice is temporary, it will be cleared at the next power up.
- Pressing the ENT key again for 2 seconds: the display flashes, the choice is permanent and cannot be modified.

Code	Parameter	Unit
COS	**Cosine** φ	0.01
tHr	**Motor thermal state** Varies from 0 to 125% 100% corresponds to the nominal thermal state for the current In set.	%
LCr	**Motor current** In amperes up to 999 A (examples: 01.5 = 1.5 A; 15.0 = 15 A; 150 = 150 A) In kiloamperes starting at 1000 A (examples: 1.50 = 1500 A; 1.15 = 1150 A)	A or kA
rnt	**Operating time** in hours since the last reset. In hours up to 999 hrs (examples: 001 = 1 hr; 111 = 111 hrs) In kilo-hours from 1000 to 65535 (examples: 1.11 = 1110 hrs; 11.1 = 11100 hrs) Above 65535 hrs (65.5) the display is reset to zero. Operating time is counted when the motor is not stopped, i.e. when the thyristors are fired (heating, acceleration, steady state, deceleration, braking) and in continuous bypass operation. The hour counter can be reset in line mode using the control word or via the terminal with the motor stopped. When the control part is switched off the hour counter is saved in the EEPROM.	h or kh
LPr	**Active power** Varies from 0 to 255% 100% corresponds to the power at nominal current and at full voltage.	%
Ltr	**Motor torque** Varies from 0 to 255% 100% corresponds to the nominal torque.	%
LAP	**Active power in kW** This parameter requires configuration of the exact value of the line voltage ULn in the drC menu.	kW
EtA	**Display of the current state** - nLP: starter without run command and power not supplied - rdY: starter without run command and power supplied - tbS: starting time delay not elapsed - ACC: acceleration in progress - dEC: deceleration in progress - rUn: steady state operation - brL: braking in progress - CLI: starter in current limiting mode - nSt : force to freewheel stop by serial link	
LFt	**Last fault detected** (see page 159). If no faults have been saved, the display shows nOF. If faults have been inhibited, the display shows **Inh.**	
PHE	**Phase rotation direction** viewed from the starter - 123: forward (L1 - L2 - L3) - 321: reverse (L3 - L2 - L1)	

Parameter displayed menu (SUP)

Code	Parameter
COd	**Terminal locking code** Enables the starter configuration to be protected using an access code. **Caution: Before entering a code, do not forget to make a careful note of it** • **OFF**: no access locking codes - To lock access, enter a code (2 to 999). The display can be incremented using the ▲ key. Now press ENT. "On" appears on the screen to indicate that the parameters have been locked. • **On**: a code is locking access (2 to 999) - **To unlock access**, enter the code (incrementing the display using the ▲ key) and press ENT. The code remains on the display and access is unlocked until the next power down. Parameter access will be locked again on the next power-up. - **If an incorrect code is entered**, the display changes to "On" and the parameters remain locked. • **XXX**: parameter access is unlocked (the code remains on the screen). - **To reactivate locking with the same code** when the parameters have been unlocked, return to "On" using the ▼ button then press ENT. "On" appears on the screen to indicate that the parameters have been locked. - **To lock access with a new code** when the parameters have been unlocked, enter a new code (increment the display using the ▲ or ▼ keys) and press ENT. "On" appears on the screen to indicate that the parameters have been locked. - **To clear locking** when the parameters have been unlocked, return to "OFF" using the ▼ button and press ENT. "OFF" remains on the screen. The parameters are unlocked and will remain unlocked until the next restart.

When access is locked using a code, only the monitoring parameters can be accessed, with only a temporary choice of parameter displayed.

Compability table

The choice of application functions can be limited by the incompability between certain functions. The functions that are not listed in the table are not incompatible with any other functions.

Functions	Soft stop	Dynamic braking stop	Force freewheel stop	Thermal protection	Loss of a motor phase	Connecting to "delta in the motor"	Test on small motor	Cascade	Preheating
Soft stop									
Dynamic braking stop									
Force freewheel stop									
Thermal protection									**(2)**
Loss of a motor phase									
Connecting to "delta in the motor"									
Test on small motor									
Cascade									
Preheating				**(2)**					

Compatible functions
Incompatible functions
Not significant

(1) Motor phase loss not detected
(2) While motor's preheating, the thermal protection is not assured. Set the preheating current IPr.

Maintenance

Servicing

The Altistart 48 does not require any preventative maintenance. It is nevertheless advisable to perform the following regularly:

- Check the condition and tightness of connections
- Ensure that the temperature around the unit remains at an acceptable level and that ventilation is effective (average service life of fans: 3 to 5 years depending on the operating conditions)
- Remove any dust from the heatsink if necessary

Assistance with maintenance

If a problem arises during setup or operation, ensure that the recommendations relating to the environment, mounting and connections have been observed.

The first fault detected is memorized and displayed on the screen: the starter locks and relays R1 and R2 change state according to their assignment.

Clearing the fault

Switch off the starter power supply in the event of a fault which cannot be reset.
Wait for the display to go off completely.
Find the cause of the fault in order to correct it.
Restore the power supply: this clears the fault if it has disappeared.

In some cases there may be an automatic restart once the fault has disappeared if this function has been programmed.

Monitoring menu

This is used to prevent and find the causes of faults by displaying the starter status and its current values.

Spares and repairs

Consult Schneider Electric product support.

Faults - causes - remedies

As a general rule, if a problem arises when the starter is started, it is advisable to return to the factory settings and repeat your settings step by step.

Starter does not start, no fault displayed

- No display: check that the line supply is present on the control supply CL1/CL2 (see page 111).
- Check that the code displayed does not correspond to the normal state of the starter (see page 129).
- Check for the presence of the RUN/STOP commands (see page 112).

Faults which cannot be reset

When this type of fault appears the starter locks and the motor switches to freewheel mode.

Signalling:
- Opening of end of starting relay R2
- Opening of relay R1 (following starter locking)
- Fault code flashes on the display
- Storing of the last 5 faults, visible with the PowerSuite software workshop

Restart conditions:
- Disappearance of the causes of the fault
- Disconnection and reconnection of the control supply

Fault displayed	Probable cause	Procedure, remedy
InF	**Internal fault**	Disconnect and reconnect the control supply. If the fault persists, contact Schneider Electric product support.
OCF	**Overcurrent:** • impeding short-circuit on starter output • internal short-circuit • bypass contactor stuck • overrate starter	Switch the starter off. • Check the connecting cables and the motor isolation • Check the thyristors • Check the bypass contactor (contact stuck) • Check the parameter value bSt in the menu drC page 141
PIF	**Phase inversion** Line phase inversion does not conform to the selection made by PHr in the Protection menu.	Invert two line phases or set PHr = no
EEF	**Internal memory fault**	Disconnect and reconnect the control supply. If the fault persists, contact Schneider Electric product support.

Faults which can be reset as soon as their causes disappear

When this type of fault appears the starter locks and the motor switches to freewheel mode.

Signalling:
- Opening of end of starting relay R2.
- Opening of relay R1 only if it is configured as an isolating relay.
- The fault code flashes on the display as long as the fault is present.
- Storing of the last 5 faults, visible with the PowerSuite software workshop.

Restart conditions:
- Disappearance of the causes of the fault.
- In 2-wire control the run command must be maintained on the RUN input.
- In 3-wire control a new run command (rising edge) is required on the RUN input.

Fault displayed	Probable cause	Procedure, remedy
CFF	**Invalid configuration** on power-up	• Revert to the factory setting in the drive menu drC. • Reconfigure the starter.
CFI	**Invalid configuration** The configuration loaded in the starter via the serial link is incompatible.	• Check the configuration loaded previously. • Load a compatible configuration.

Faults which can be reset manually and can generate an automatic restart

(1)

When this type of fault appears the starter locks and the motor switches to freewheel mode.

Signalling with automatic restart:
- Opening of end of starting relay R2
- Opening of relay R1 only if it is configured as an isolating relay. R1 remains closed if it is configured as a fault relay, see page 146
- The fault code flashes on the display as long as the fault is present
- Storing of the last 5 faults, visible with the PowerSuite software workshop

Restart conditions for the following faults with automatic restarting (in 2-wire control only):
- Disappearance of the causes of the fault
- Run command maintained on the RUN input
- 6 restart attemps are carried out at intervals of 60 seconds. At the 6th attempt if the fault is still present it trips requiring a manual reset (see following page) and R1 opens if it is configured as a fault relay

Fault displayed	Probable cause	Procedure, remedy
FrF (2)	**Line frequency, out of tolerance** This fault can be configured in the Advanced settings menu drC, parameter FrC.	• Check the line. • Check that the configuration of the FrC parameter is compatible with the line used (generating set for example).
PHF (3)	**Loss of a line phase**	• Check the line, the frequency stability, the connection to the starter and any devices located between the line and the starter (contactor, fuses, circuit-breaker, etc.). • If bypass contator. is used, check the mechanism (wear, mechanical play, lubrication, blockages...)
	Loss of a motor phase If the motor current falls below an adjustable threshold PHL in one phase for 0.5 s or in the three phases for 0.2 s. This fault can be configured in the Protection menu PrO, parameter PHL.	• Check the motor connection (T1, T2, T3 terminal) and any isolating devices located between the starter and the motor (contactors, circuit-breakers, etc.). • Check the motor state. • Check that the configuration of the PHL parameter is compatible with the motor used.

(1) If the automatic restart function is not selected, see page 163 for the signalling and restart conditions of these faults.
(2) After each Power ON of the control supply, the FrF detection is done only at the first power ON of the main supply.
(3) For next Power ON of the main supply, bad frequency will also generate a desynchronization fault PHF.

Faults which can be reset manually and can generate an automatic restart (1)

When this type of fault appears the starter locks and the motor switches to freewheel mode.

Restart conditions for the following faults:
- Disappearance of the causes of the fault
- Run command maintained (2-wire control only)

Fault displayed	Probable cause	Procedure, remedy
USF	**Power supply fault** on a run command	• Check the power supply circuit and voltage.
CLF	Control line failure	• Loss of CL1/CL2 for more than 200 ms

(1) If the automatic restart function is not selected, see page 163 for the signalling and restart conditions of these faults.

Faults which can be manually reset only

When this type of fault appears the starter locks and the motor switches to freewheel mode.

Signalling:
- Opening of end of starting relay R2
- Opening of relay R1
- The fault code flashes on the display as long as the fault is present
- Storing of the last 5 faults, visible with the PowerSuite software workshop

Restart conditions:
- Disappearance of the causes of the fault
- A run command (2 or 3-wire control, requires a rising edge on the RUN input) to reset the fault (1)
- Another run command (2 or 3-wire control, requires a rising edge on the RUN input) to restart the motor

Fault displayed	Probable cause	Procedure, remedy
SLF	**Serial link fault**	• Check the RS485 connection.
EtF	**External fault**	• Check the fault taken into account.
StF	**Excessive starting time**	• Check the mechanism (wear, mechanical play, lubrication, blockages, etc.). • Check the value of the tLs setting in the PrO menu page 137. • Check the sizing of the starter-motor in relation to the mechanical requirement.
OLC	**Current overload**	• Check the mechanism (wear, mechanical play, lubrication, blockages, etc.). • Check the value of the LOC and tOL parameters in the PrO menu page 138.
OLF	**Motor thermal fault**	• Check the mechanism (wear, mechanical play, lubrication, blockages, etc.). • Check the sizing of the starter-motor in relation to the mechanical requirement. • Check the value of the tHP parameter in the PrO menu page 137 and that of the In parameter in the SEt menu page 132. • Check the electrical isolation of the motor. • Wait for the motor to cool before restarting.
OHF	**Starter thermal fault**	• Check the mechanism (wear, mechanical play, lubrication, blockages, etc.). • Check the sizing of the starter in relation to the motor and the mechanical requirement. • Check the operation of the fan (if the ATS48 used has one), ensuring that the air passage is not obstructed in any way and the heatsink is clean. Ensure that the mounting recommendations are observed. • Wait for the ATS48 to cool before restarting.

(1) A reset will not take place on a run command if LI is assigned to the "fault reset (LIr)" function.

Faults which can be manually reset only

Fault displayed	Probable cause	Procedure, remedy
OtF	**Motor thermal fault detected by the PTC probes**	• Check the mechanism (wear, mechanical play, lubrication, blockages, etc.). • Check the sizing of the starter-motor in relation to the mechanical requirement. • Check the value of the PtC setting in the PrO menu page 139. • Wait for the motor to cool before restarting.
ULF	**Motor underload**	• Check the hydraulic circuit. • Check the value of the LUL and tUL parameters in the Pro protection menu page 137.
LrF	**Locked rotor** in steady state This fault is only active in steady state with starter bypass contactor. It is detected if the current in a phase is greater than or equal to 5 In for more than 0.2 s.	• Check the mechanism (wear, mechanical play, lubrication, blockages, etc.).
Err1	Only possible on the remote terminal: incorrect values for tbr and FOr	• Configured tbr = 19,2 and FOr = 8n1 or PCt = On see page 153

Reset faults using a logic input

If a logic input LI is configured as "reset motor thermal fault" or "reset faults which can be reset", the following conditions must be met:
- A pulse on logic input LI
- In 2-wire control the motor will restart if the run command is maintained on the RUN input
- In 3-wire control the motor will restart on a new run command (rising edge) on the RUN input

Configuration/Settings tables

ATS 48 starter.....
Customer identification no.(if applicable).....
Access code (if applicable).....

Settings menu SEt

Code	Factory setting	Customer setting	Code	Factory setting	Customer setting
In	(1)		dEC	15 s	
ILt	400%		EdC	20%	
ACC	15 s		brC	50%	
t90	20%		EbA	20%	
StY	-F-				

The parameters in shaded boxes appear if the corresponding functions have been configured.

Protection menu PrO

Code	Factory setting	Customer setting	Code	Factory setting	Customer setting
tHP	10		tOL	10.0	
ULL	OFF		PHr	no	
LUL	60%		tbS	2 s	
tUL	60%		PHL	10%	
tLS	OFF		PtC	OFF	
OIL	OFF		ArS	OFF	
LOC	80%		rtH	no	

The parameters in shaded boxes appear if the corresponding functions have been configured.

(1) Depends on the starter rating.

Advanced settings menu drC

Code	Factory setting	Customer setting	Code	Factory setting	Customer setting
tLI	OFF		LSC	50%	
bSt	OFF		t IG	40%	
dLt	OFF		CSC	OFF	
SSt	OFF		ULn	(1)	
CLP	On		FrC	AUt	

The parameters in shaded boxes appear if the corresponding functions have been configured.

I/O menu IO

Code	Factory setting	Customer setting	Code	Factory setting	Customer setting
LI3	LIA		r1	r1I	
LI4	LIL		r3	rn1	
IPr	0%		AO	OCr	
tPr	5 mn		O4	020	
LO1	tA1		ASC	200	
LO2	rn1				

The parameters in shaded boxes appear if the corresponding functions have been configured.

(1) -ATS 48 •••Q: 400 V
-ATS 48•••Y: 460 V

2nd motor parameters menu St2

This menu is only visible if a logic input is assigned to the function for activating a second set of motor parameters (LIS) in the I/O menu.

Code	Factory setting	Customer setting	Code	Factory setting	Customer setting
In2	(1)		dE2	15 s	
IL2	400%		Ed2	20%	
AC2	15 s		tL2	OFF	
t92	20%		t I2	40%	

Communication menu COP

Code	Factory setting	Customer setting	Code	Factory setting	Customer setting
Add	0		tLP	5 s	
tbr	19.2 kbps		PCt	OFF	
FOr	8n1				

(1) Depends on the starter rating.

Grundsätzlich muss die Spannungsversorgung des Steuerteils (CL1 - CL2) und des Leistungsteils (1/L1 - 3/L2 - 5/L3) des Altistart 48 ausgeschaltet werden, bevor elektrische oder mechanische Eingriffe an der Anlage oder im Gerät erfolgen.
Während des Betriebs kann es durch das Rücksetzen des Fahrbefehls zu einem Anhalten des Motors kommen, wobei der Sanftanlasser jedoch unter Spannung bleibt. Falls es zur Sicherheit des Personals erforderlich ist, ein plötzliches Wiederanlaufen zu verhindern, ist eine elektronische Sperre nicht ausreichend: Sehen Sie zu diesem Zweck eine Trennung des Leistungsschaltkreises vor.

Der Sanftanlasser verfügt über Sicherheitsvorrichtungen, die bei Störungen das Gerät selbst und damit auch den Motor abschalten können. Der Motor kann auch durch mechanische Fehler blockiert werden. Ebenso können Schwankungen der Versorgungsspannung oder Stromausfälle die Ursache für das Anhalten der Motoren sein.
Nach Beseitigung der Ursache, die das Anhalten ausgelöst hat, kann es bei einigen Maschinen und Anlagen durch den automatischen Wiederanlauf zu einem erhöhten Risiko kommen; insbesondere ist dies bei Maschinen zu berücksichtigen, die bestimmten Sicherheitsanforderungen entsprechen müssen.
Sofern dies der Fall ist, hat der Betreiber durch die Verwendung von Drehzahlwächtern, die die Versorgungsspannung des Sanftanlassers abschalten, dafür Sorge zu tragen, dass ein Wiederanfahren des Motors nach einem nicht vorgesehenen Anhaltevorgang nicht möglich ist.

Technische und betriebsrelevante Änderungen zu den in diesen Unterlagen aufgeführten Produkten und Geräten sind jederzeit auch ohne Vorankündigung vorbehalten. Die hierin enthaltenen Beschreibungen sind unverbindlich.

Einbau und Inbetriebnahme dieses Sanftanlassers müssen den internationalen IEC-Normen und den am Einbauort geltenden nationalen Normen entsprechen. Der Anwender ist für die Einhaltung dieser Normen verantwortlich. Innerhalb der Europäischen Union sind außerdem die entsprechenden Vorschriften zur Elektromagnetischen Verträglichkeit (EMV) zu befolgen.
Die in diesem Dokument enthaltenen Angaben müssen angewendet werden, um die grundlegenden Anforderungen der EMV-Richtlinie zu erfüllen.

Der Altistartþ48 muss als Komponente angesehen werden. Er ist weder eine Maschine noch ein einsatzbereites Gerät nach europäischen Vorschriften (Maschinenrichtlinie und Richtlinie zur elektromagnetischen Verträglichkeit). Es liegt in der Verantwortung des Anlagenherstellers, dafür zu sorgen, daß seine Anlage diesen Vorschriften entspricht.

Inhalt

Vorgehensweise zur Inbetriebnahme 170
Werkseitige Konfiguration 172
Einleitende Empfehlungen 173
Technische Daten 174
Einsatzempfehlungen 175
Zuordnung von Sanftanlasser und Motor 178
Abmessungen 184
Vorsichtsmaßnahmen beim Einbau 186
Einbau in ein Gehäuse oder einen Schaltschrank 187
Leistungsklemmenleisten 188
Steuerklemmenleisten 193
Verdrahtung / Befehle RUN - STOP 194
Schaltungsempfehlung 195
Thermische Schutzvorrichtungen 205
Anzeige und Programmierung 209
Option Bedienterminal 212
Menü "Einstellung" SEt 213
Menü "Schutz" PrO 218
Menü "Zusätzliche Einstellungen" drC 222
Menü "Belegung der Eingänge / Ausgänge" IO 226
Menü "Parameter 2. Motor" St2 230
Menü "Kommunikation" COP 234
Menü "Angezeigter Parameter" SUP 236
Tabelle Kompatibilität 239
Wartung 240
Störungen - Ursachen - Behebung 241
Tabellen für Konfiguration / Einstellungen 247

Vorgehensweise zur Inbetriebnahme

1 - Empfang des Altistart 48

- Überprüfen, ob die Angaben auf dem Typenschild des Sanftanlassers mit der Bezeichnung auf dem Bestellschein und auf dem Lieferschein übereinstimmen.
- Verpackung öffnen und überprüfen, dass der Altistart 48 nicht während des Transportes beschädigt wurde.

⚠ WARNUNG

BESCHÄDIGTE SANFTANLASSERKOMPONENTEN

Installieren Sie Sanftanlasser bzw. Zubehörteile nicht und nehmen Sie sie nicht in Betrieb, wenn sie beschädigt sind.

Die Nichtbeachtung dieser Anweisungen kann zu Tod, schwerer Körperverletzung oder Materialschäden führen!

2 - Vertikale Montage des Umrichters

- Den Altistart 48 entsprechend den **Seite 186** und **Seite 187** montieren.

3 - An den Altistart 48 folgendes anschließen

- Verdrahten Sie den Sanftstart erdungsanschluss.
- Das Versorgungsnetz für den Steuerteil (CL1 - CL2): Achten Sie darauf, dass es ausgeschaltet ist
- Das Versorgungsnetz für den Leistungsteil (1/L1 - 3/L2 - 5/L3): Achten Sie darauf, dass es ausgeschaltet ist
- Den Motor (2/T1 - 4/T2 - 6/T3): Achten Sie darauf, dass seine Schaltung der Netzspannung entspricht.

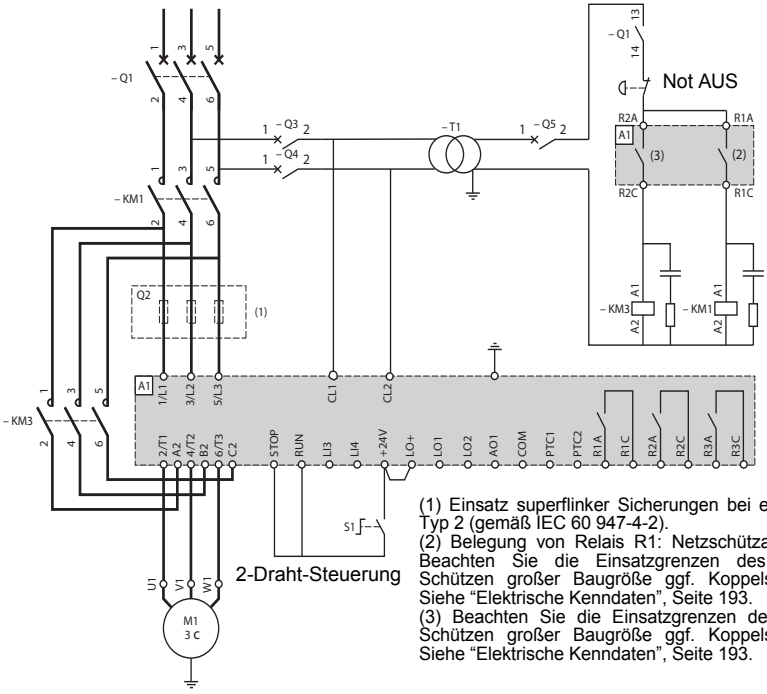

(1) Einsatz superflinker Sicherungen bei einer Koordination Typ 2 (gemäß IEC 60 947-4-2).
(2) Belegung von Relais R1: Netzschützansteuerung (r1I). Beachten Sie die Einsatzgrenzen des Kontaktes, bei Schützen großer Baugröße ggf. Koppelschütz vorsehen. Siehe “Elektrische Kenndaten”, Seite 193.
(3) Beachten Sie die Einsatzgrenzen des Kontaktes, bei Schützen großer Baugröße ggf. Koppelschütz vorsehen. Siehe “Elektrische Kenndaten”, Seite 193.

Hinweis: Für weitere Anschlussdiagramme, siehe Seiten **Seite 195 bis Seite 204**.
Bei Verwendung des ATS48●●●Q / ATS48●●●YS316 in den Dreieckwicklungen des Motors bitte nach den Empfehlungen auf **Seite 176**, **Seite 177** und dem Schaltplan auf **Seite 197** vorgehen.

4 - Den Steuerteil einschalten (CL1-CL2)

- Einschalten, ohne dass der Leistungsteil eingeschaltet wird und ohne dass ein Fahrbefehl erteilt wird.
- Überprüfen Sie, daß "S1" offen ist .
- Schließen: Q1, dann Q3, dann Q4.
- Der Sanftanlasser zeigt an: nLP (gibt an, dass der Leistungsteil spannungslos ist).

.

VORSICHT

GEFAHR VON SCHÄDEN AM SANFTANLASSER

- Die Spannungsversorgung an CL1 - CL2 prüfen:

ATS48●●●Q - Spannung muss 220 - 415 VAC betragen
ATS48●●●Y - Spannung muss 110 - 230 VAC betragen
Die Nichtbeachtung dieser Anweisungen kann zu Materialschäden führen!

5 - Motorbemessungs-Betriebsstrom In einstellen

- Den auf dem Leistungsschild angegebenen Nennstrom des Motors einstellen.

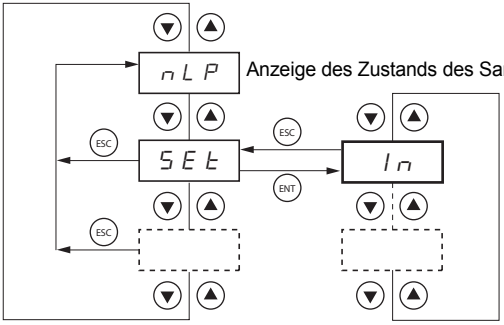

6 - Den Leistungsteil einschalten (1/L1 - 3/L2 - 5/L3)

- Schließen: Q5.
- Der Sanftanlasser zeigt an: rdy (gibt an, dass der Leistungsteil spannungslos ist).

7 - Starten Sie den Motor

- Drücken S1, Um Motor zu starten

8 - Informationen zur Fehlerbehebung

- Sehen Störungen - Ursachen - Behebung **Seite 241**

VORSICHT

GEFAHR DER MOTORÜBERHITZUNG

Der Sanftanlasser ATS 48 ist werkseitig so konfiguriert, dass er eine Standardanwendung,die keine spezifische Funktion erfordert, bei einem Motorschutz der Klasse 10 anlaufen lassen kann.
Eine Veränderung der Einstellungen bleibt entsprechend dem Verfahren des Zugriffs auf die Parameter möglich, siehe **Seite 210.**
In jedem Fall muss der Parameter In auf den Wert des auf dem Leistungsschild des Motors angegebenen Bemessungsstroms eingestellt werden.
Die Nichtbeachtung dieser Anweisungen kann zu Materialschäden führen!

Werkseitige Konfiguration

Voreinstellungen

Der Altistart 48 wurde werkseitig für die am häufigsten benötigten Anwendungen voreingestellt:

- Verwendung des ATS 48 im Versorgungsnetz des Motors (und nicht im "Dreieck" in die Motorwicklungen integriert)
- Nennstrom In des Motors:
  - ATS 48 •••Q: voreingestellt für einen 4-poligen Standardmotor 400 V
  - ATS 48 •••Y: voreingestellt auf den Strom NEC, Motor 460 V
- Motorbegrenzungsstrom (ILt): 400% des Nennstroms In des Motors
- Hochlaufzeit (ACC): 15 Sekunden
- Losbrechmoment beim Hochlauf (tq0): 20% des Nennmomentes
- AUS (StY): Anhalten im freien Auslauf (-F-)
- Thermischer Motorschutz (tHP): Auslösekennlinie der Klasse 10
- Anzeige: rdY (Sanftanlasser bereit), Spannung von Leistungs- und Steuerteil liegt an, Motorstrom in Betrieb
- Logikeingänge:
  - LI1 : STOP
  - LI2 : RUN
  - LI3 : Anhalten im freien Auslauf (LIA)
  - LI4 : LOCAL-Betrieb (LIL)
- Logikausgänge:
  - LO1 : Alarm Thermische Überlast Motor (tA1)
  - LO2 : Motor in Betrieb (rnI)
- Relaisausgänge:
  - R1 : Störmelderelais (r1I)
  - R2 : Überbrückungsrelais am Ende des Anlaufs (By-Pass)
  - R3 : Motor in Betrieb (rnI)
- Analogausgang:
  - AO : Motorstrom (OCr, 0 - 20 mA)
- Kommunikationsparameter:
  - Anschluss über die serielle Schnittstelle, der Sanftanlasser hat die logische Adresse (Add) = " 0 "
  - Datenübertragungsrate (tbr): 19200 Bit pro Sekunde
  - Datenübertragungsformat (FOr): 8 Bit, keine Parität, 1 Stoppbit (8n1)

Wenn die oben genannten Werte mit der Anwendung vereinbar sind, kann der Sanftanlasser ohne Modifizierung der Einstellungen eingesetzt werden.

Handhabung und Lagerung

Um den Schutz des Sanftanlassers vor der Montage sicherzustellen, sollte das Gerät in seiner Verpackung bewegt und gelagert werden.

Handhabung bei der Montage

Die Baureihe Altistart 48 besteht aus 6 Baugrößen von Sanftanlassern, die sich in ihrem Gewicht und den Abmessungen unterscheiden.

Die kleinen Sanftanlasser lassen sich ohne zusätzliche Hilfe auspacken und montieren.

Für die großen Sanftanlasser ist ein Hebezeug notwendig, sie sind daher mit Transportösen ausgestattet. Die nachfolgenden Vorsichtsmaßnahmen beachten:

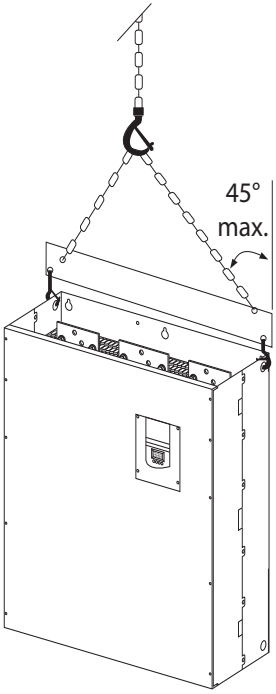

Den Sanftanlasser nicht mit Hilfe der Leistungsanschlüsse (Kupferschienen) handhaben

Umgebungsbedingungen

Schutzart	• IP 20 bei ATS 48D17• bis C11• • IP00 bei ATS 48C14• bis M12• (1)
Schockfestigkeit	Gemäß IEC 68-2-6: • 1,5 mm Spitze zu Spitze von 2 bis 13 Hz • 1 gn von 13 bis 200 Hz
Stoßfestigkeit	Gemäß IEC 68-2-27: • 15 gn, 11 ms
Maximaler Verschmutzungsgrad	Gradþ3 gemäß IEC 947-4-2.
Maximale relative Luftfeuchtigkeit	93 % ohne Kondensation und Tropfwasser, gemäß IEC 68-2-3
Umgebungslufttemperatur	Lagerung: - 25 °C bis +70 °C Betrieb: • - 10 °C bis + 40 °C ohne Leistungsminderung • bis zu + 60 °C durch Reduzierung des Stroms um 2 % pro °C über 40 °C
Max. Aufstellhöhe für Betrieb	1000 m ohne Leistungsminderung (Reduzierung des Stroms um 2 % je zusätzliche 100 m)
Einbaulage	Vertikal bei ± 10 °

(1) Die ATS 48 mit der Schutzart IP00 müssen mit einer Schutzabdeckung ausgestattet werden, um die Sicherheit des Personals vor elektrischen Berührungen zu gewährleisten

Verfügbares Drehmoment

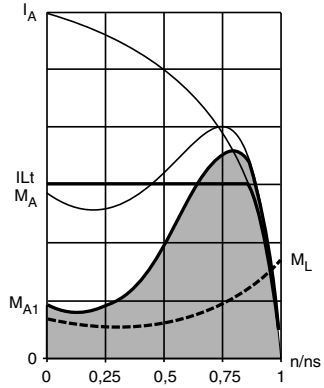

Die Kennlinien M_A und I_A stellen den Anlauf eines Asynchronmotors direkt am Versorgungsnetz dar.

Die Kennlinie M_{A1} gibt die Hüllkurve des mit einem ATS 48 verfügbaren Drehmoments an, das vom Begrenzungsstrom ILt abhängt. Der progressive Anlauf wird durch die Steuerung des Motordrehmoments innerhalb dieser Hüllkurve erreicht.

M_L: Gegenmoment, muss immer kleiner als das Drehmoment M_{A1} sein.

Auswahl des Sanftanlassers

Die Betriebsart S1 des Motors entspricht einem Anlauf, gefolgt von einem Betrieb mit konstanter Belastung, dessen Dauer ausreicht, den thermischen Beharrungszustand zu erreichen.
Die Betriebsart S4 des Motors entspricht einem Zyklus, der einen Anlauf, einen Betrieb mit konstanter Belastung und eine Pause umfasst. Dieser Zyklus wird durch eine relative Einschaltdauer gekennzeichnet.

Der Altistart 48 muss in Abhängigkeit des Anwendungstyps "Standard" oder "Schweranlauf" und der Nennleistung des Motors ausgewählt werden. Die Anwendungen "Standard" oder "Schweranlauf" legen die Grenzwerte für Stromstärke und Zyklus bei den Betriebsarten S1 und S4 des Motors fest.

Achtung: Den Altistart 48 nicht vor anderen Verbrauchern als Motoren einsetzen (beispielsweise Transformatoren oder Widerstände sind unzulässig). An den Klemmen eines über einen Altistart 48 gesteuerten Motors keine Kondensatoren zur Kompensation des Leistungsfaktors anschließen

Anwendung "Standard"

Beispiel: Zentrifugalpumpe.
Bei Standardanwendungen ist der Altistart 48 so dimensioniert, dass er folgenden Kenndaten entspricht:
- in Betriebsart S1: ein Anlauf bei 4 I_e während 23 Sekunden oder ein Anlauf bei 3 I_e während 46 Sekunden, ausgehend von kaltem Zustand des Motors.
- in Betriebsart S4: eine relative Einschaltdauer von 50 % und 10 Anlaufvorgänge pro Stunde, bei 3 I_e während 23 Sekunden oder 4 I_e während 12 Sekunden bzw. ein thermisch damit vergleichbarer Zyklus.

In diesem Fall muss der thermische Motorschutz auf Auslöseklasse 10 eingestellt sein.

Anwendung "Schweranlauf"

Beispiel: Brechwerk.
Bei Anwendungen mit Schweranlauf ist der Altistart 48 so dimensioniert, dass er einer Betriebsart S4 mit einer relativen Einschaltdauer von 50 % und 5 Anlaufvorgängen pro Stunde entspricht, bei 4 I_e während 23 Sekunden oder einem thermisch damit vergleichbaren Zyklus.
In diesem Fall muss der thermische Motorschutz auf Auslöseklasse 20 eingestellt sein. Der Strom **I_e darf nicht auf seiner Werkseinstellung bleiben**, er muss auf den auf dem Leistungsschild des Motors gestempelten Wert eingestellt werden.

Anmerkung: Der Sanftanlasser kann um eine Leistungsstufe überdimensioniert werden, beispielsweise die Auswahl eines ATS 48D17Q für einen Motor 11 kW - 400 V bei Betriebsart S4 des Motors.
Dazu muss der Altistart am Ende des Anlaufvorgangs überbrückt werden. Dies ermöglicht maximal 10 Anlaufvorgänge pro Stunde bei 3 I_e während 23 Sekunden oder thermisch damit vergleichbare Vorgänge, und der thermische Motorschutz muss auf Auslöseklasse 10 eingestellt sein.

Altistart 48 Reihe Q (230-415 V) in der Zuleitung der Motors oder in der Dreieckwicklung des Motors angeschlossen

Altistart 48 in der Zuleitung des Motors angeschlossen

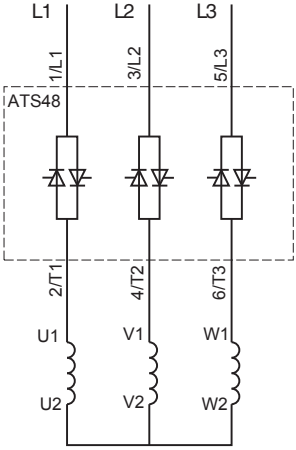

Die Schaltung des Motors hängt von der Versorgungsspannung ab, **hier in Sternschaltung**

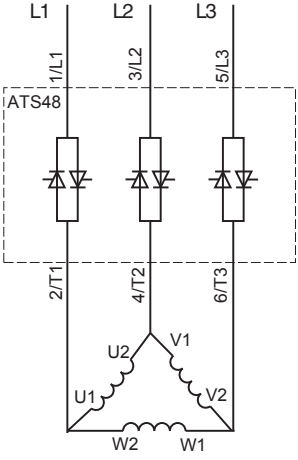

Die Schaltung des Motors hängt von der Versorgungsspannung ab, **hier in Dreieckschaltung**

Altistart 48 in der Dreieckwicklung des Motors in Reihe mit jeder Wicklung angeschlossen (Wurzel-3-Schaltung)

Die Typen ATS48●●●Q oder ATS48●●●YS316 zusammen mit Motoren in Dreieckschaltung können in Serie in die Wicklungen des Motors integriert werden. Auf diese Weise unterliegen sie einem Strom, der im Verhältnis √3 niedriger als der Netzstrom ist. Dies wiederum ermöglicht die Verwendung eines Sanftanlassers einer geringeren Leistungsstufe.

Diese Möglichkeit kann im Menü "Zusätzliche Einstellungen" konfiguriert werden (dLt = On).
Die Einstellungen von Nennstrom und Begrenzungsstrom sowie der während des Betriebs angezeigte Strom bleiben dabei die im Netz vorliegenden Werte und vermeiden so die Notwendigkeit einer Umrechnung durch den Anwender.

Die Schaltung des Altistart 48, bei der er in der Dreieckwicklung des Motors angeschlossen wird, ist nur mit den Sanftanlassern der Typen ATS48●●●Q oder ATS48●●●YS316 möglich. Diese Schaltung lässt folgendes zu:
- Keine Anhalten dynamischer Bremsung
- keine Funktion "Kaskadenbetrieb"
- keine Funktion "Motorheizung"

Siehe die Tabellen auf Seite 178 zur Festlegung der Zuordnung von Sanftanlasser und Motor.

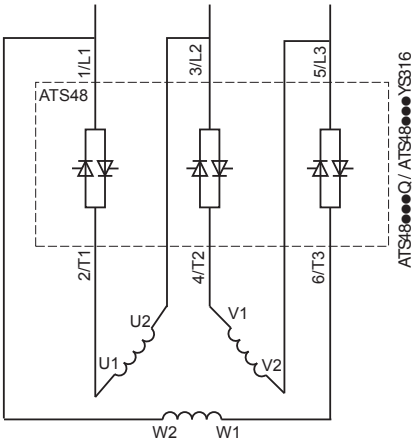

Schaltung in der Dreieckwicklung des Motors (Wurzel-3-Schaltung)

Beispiel:
Gegeben ist ein 400-V-Motor mit 110 kW und einem Netzstrom von 195 A (für die Dreieckschaltung gestempelter Strom).
Der Strom in jeder Wicklung ist gleich 195/1,7 also 114 A.
Man wählt die Baugröße des Sanftanlassers mit dem maximalen Dauer-Nennstrom, der direkt über diesem Strom liegt, d. h. die Baugröße 140 A (ATS48C14Q für eine Standardanwendung).
Diese Berechnung können Sie vermeiden, wenn Sie die Tabellen auf Seite 180 et 181 verwenden, die in Abhängigkeit des Anwendungstyps direkt die Baugröße des Sanftanlassers angeben, die der Motorleistung entspricht.

Standardanwendung, Netz 230 / 415 V, Sanftanlasser in der Zuleitung

Motor		Sanftanlasser 230 / 415 V (+ 10 % - 15 %) - 50 / 60 Hz		
Motorleistung lt. Typenschild		Max. Dauerstrom in Klasse 10	Kaliber ICL	Typ Sanftanlasser
230 V	400 V			
kW	**kW**	**A**	**A**	
4	7,5	17	17	ATS 48D17Q
5,5	11	22	22	ATS 48D22Q
7,5	15	32	32	ATS 48D32Q
9	18,5	38	38	ATS 48D38Q
11	22	47	47	ATS 48D47Q
15	30	62	62	ATS 48D62Q
18,5	37	75	75	ATS 48D75Q
22	45	88	88	ATS 48D88Q
30	55	110	110	ATS 48C11Q
37	75	140	140	ATS 48C14Q
45	90	170	170	ATS 48C17Q
55	110	210	210	ATS 48C21Q
75	132	250	250	ATS 48C25Q
90	160	320	320	ATS 48C32Q
110	220	410	410	ATS 48C41Q
132	250	480	480	ATS 48C48Q
160	315	590	590	ATS 48C59Q
(1)	355	660	660	ATS 48C66Q
220	400	790	790	ATS 48C79Q
250	500	1000	1000	ATS 48M10Q
355	630	1200	1200	ATS 48M12Q

Der Motorbemessungs-Betriebsstrom I_e darf den maximalen Dauerstrom in Klasse 10 nicht überschreiten.
(1) Keine Angabe eines Wertes, da es keinen entsprechenden Normmotor gibt.

Leistungsminderung in Abhängigkeit der Temperatur

Die Tabelle auf dieser Seite geht von einem Einsatz bei einer Umgebungstemperatur von maximal 40 °C aus. Der ATS 48 kann bis zu einer Umgebungstemperatur von 60 °C eingesetzt werden, vorausgesetzt dass der maximale Dauerstrom in Klasse 10 pro Grad über 40 °C um 2 % herabgestuft wird.
Beispiel: ATS 48D32Q bei 50 °C mit Herabstufung um 10 x 2 % = 20 %, 32 A werden zu 32 x 0,8 = 25,6 A (maximaler Nennstrom des Motors).

Anwendung mit Schweranlauf, Netz 230 / 415 V, Sanftanlasser in der Zuleitung

Motor		Sanftanlasser 230 / 415 V (+ 10 % - 15 %) - 50 / 60 Hz		
Motorleistung lt. Typenschild		Max. Dauerstrom in Klasse 20	Kaliber ICL	Typ Sanftanlasser
230 V	400 V			
kW	**kW**	**A**	**A**	
3	5,5	12	17	ATS 48D17Q
4	7,5	17	22	ATS 48D22Q
5,5	11	22	32	ATS 48D32Q
7,5	15	32	38	ATS 48D38Q
9	18,5	38	47	ATS 48D47Q
11	22	47	62	ATS 48D62Q
15	30	62	75	ATS 48D75Q
18,5	37	75	88	ATS 48D88Q
22	45	88	110	ATS 48C11Q
30	55	110	140	ATS 48C14Q
37	75	140	170	ATS 48C17Q
45	90	170	210	ATS 48C21Q
55	110	210	250	ATS 48C25Q
75	132	250	320	ATS 48C32Q
90	160	320	410	ATS 48C41Q
110	220	410	480	ATS 48C48Q
132	250	480	590	ATS 48C59Q
160	315	590	660	ATS 48C66Q
(1)	355	660	790	ATS 48C79Q
220	400	790	1000	ATS 48M10Q
250	500	1000	1200	ATS 48M12Q

Der Motorbemessungs-Betriebsstrom I_e darf den maximalen Dauerstrom in Klasse 20 nicht überschreiten.
(1) Keine Angabe eines Wertes, da es keinen entsprechenden Normmotor gibt.

Leistungsminderung in Abhängigkeit der Temperatur

Die Tabelle auf dieser Seite geht von einem Einsatz bei einer Umgebungstemperatur von maximal 40 °C aus. Der ATS 48 kann bis zu einer Umgebungstemperatur von 60 °C eingesetzt werden, vorausgesetzt dass der maximale Dauerstrom in Klasse 20 pro Grad über 40 °C um 2 % herabgestuft wird.
Beispiel: ATS 48D32Q bei 50 °C mit Herabstufung um 10 x 2 % = 20 %, 22 A werden zu 22 x 0,8 = 17,6 A (maximaler Nennstrom des Motors).

Standardanwendung, Netz 230 / 415 V, Sanftanlasser in Dreieckschaltung (Wurzel-3-Schaltung)

Motor		Sanftanlasser 230 / 415 V (+ 10 % - 15 %) - 50 / 60 Hz		
Motorleistung lt. Typenschild		Max. Dauerstrom in Klasse 10	Kaliber ICL	Typ Sanftanlasser
230 V	400 V			
kW	**kW**	**A**	**A**	
7,5	15	29	29	ATS 48D17Q
9	18,5	38	38	ATS 48D22Q
15	22	55	55	ATS 48D32Q
18,5	30	66	66	ATS 48D38Q
22	45	81	81	ATS 48D47Q
30	55	107	107	ATS 48D62Q
37	55	130	130	ATS 48D75Q
45	75	152	152	ATS 48D88Q
55	90	191	191	ATS 48C11Q
75	110	242	242	ATS 48C14Q
90	132	294	294	ATS 48C17Q
110	160	364	364	ATS 48C21Q
132	220	433	433	ATS 48C25Q
160	250	554	554	ATS 48C32Q
220	315	710	710	ATS 48C41Q
250	355	831	831	ATS 48C48Q
(1)	400	1022	1022	ATS 48C59Q
315	500	1143	1143	ATS 48C66Q
355	630	1368	1368	ATS 48C79Q
(1)	710	1732	1732	ATS 48M10Q
500	(1)	2078	2078	ATS 48M12Q

Der Motorbemessungs-Betriebsstrom I_e darf den maximalen Dauerstrom in Klasse 10 nicht überschreiten.
(1) Keine Angabe eines Wertes, da es keinen entsprechenden Normmotor gibt.

Leistungsminderung in Abhängigkeit der Temperatur

Die Tabelle auf dieser Seite geht von einem Einsatz bei einer Umgebungstemperatur von maximal 40 °C aus. Der ATS 48 kann bis zu einer Umgebungstemperatur von 60 °C eingesetzt werden, vorausgesetzt dass der maximale Dauerstrom in Klasse 10 pro Grad über 40 °C um 2 % herabgestuft wird.
Beispiel: ATS 48D32Q bei 50 °C mit Herabstufung um 10 x 2 % = 20 %, 55 A werden zu 55 x 0,8 = 44 A (maximaler Nennstrom des Motors).

Anwendung mit Schweranlauf, Netz 230 / 415 V, Sanftanlasser in Dreieckschaltung (Wurzel-3-Schaltung)

Motor		Sanftanlasser 230 / 415 V (+ 10 % - 15 %) - 50 / 60 Hz		
Motorleistung lt. Typenschild		Max. Dauerstrom in Klasse 20	Kaliber ICL	Typ Sanftanlasser
230 V	400 V			
kW	**kW**	**A**	**A**	
5,5	11	22	29	ATS 48D17Q
7,5	15	29	38	ATS 48D22Q
9	18,5	38	55	ATS 48D32Q
15	22	55	66	ATS 48D38Q
18,5	30	66	81	ATS 48D47Q
22	45	81	107	ATS 48D62Q
30	55	107	130	ATS 48D75Q
37	55	130	152	ATS 48D88Q
45	75	152	191	ATS 48C11Q
55	90	191	242	ATS 48C14Q
75	110	242	294	ATS 48C17Q
90	132	294	364	ATS 48C21Q
110	160	364	433	ATS 48C25Q
132	220	433	554	ATS 48C32Q
160	250	554	710	ATS 48C41Q
220	315	710	831	ATS 48C48Q
250	355	831	1022	ATS 48C59Q
(1)	400	1022	1143	ATS 48C66Q
315	500	1143	1368	ATS 48C79Q
355	630	1368	1732	ATS 48M10Q
(1)	710	1732	2078	ATS 48M12Q

Der Motorbemessungs-Betriebsstrom I_e darf den maximalen Dauerstrom in Klasse 20 nicht überschreiten.
(1) Keine Angabe eines Wertes, da es keinen entsprechenden Normmotor gibt.

Leistungsminderung in Abhängigkeit der Temperatur

Die Tabelle auf dieser Seite geht von einem Einsatz bei einer Umgebungstemperatur von maximal 40 °C aus. Der ATS 48 kann bis zu einer Umgebungstemperatur von 60 °C eingesetzt werden, vorausgesetzt dass der maximale Dauerstrom in Klasse 20 pro Grad über 40 °C um 2 % herabgestuft wird.
Beispiel: ATS 48D32Q bei 50 °C mit Herabstufung um 10 x 2 % = 20 %, 38 A werden zu 38 x 0,8 = 30,4 A (maximaler Nennstrom des Motors).

Standardanwendung, Netz 208 / 690 V, Sanftanlasser in der Zuleitung

Motor							Sanftanlasser 208 / 690 V (+ 10 % - 15 %) - 50 / 60 Hz		
Motorleistung lt. Typenschild							Max. Dauerstrom in Klasse 10	Kaliber ICL	Typ Sanftanlasser
208 V	230 V	440 V	460 V	500 V	575 V	690 V			
HP	**HP**	**kW**	**HP**	**kW**	**HP**	**kW**	**A**	**A**	
3	5	7,5	10	9	15	15	17	17	ATS 48D17Y
5	7,5	11	15	11	20	18,5	22	22	ATS 48D22Y
7,5	10	15	20	18,5	25	22	32	32	ATS 48D32Y
10	(1)	18,5	25	22	30	30	38	38	ATS 48D38Y
(1)	15	22	30	30	40	37	47	47	ATS 48D47Y
15	20	30	40	37	50	45	62	62	ATS 48D62Y
20	25	37	50	45	60	55	75	75	ATS 48D75Y
25	30	45	60	55	75	75	88	88	ATS 48D88Y
30	40	55	75	75	100	90	110	110	ATS 48C11Y
40	50	75	100	90	125	110	140	140	ATS 48C14Y
50	60	90	125	110	150	160	170	170	ATS 48C17Y
60	75	110	150	132	200	200	210	210	ATS 48C21Y
75	100	132	200	160	250	250	250	250	ATS 48C25Y
100	125	160	250	220	300	315	320	320	ATS 48C32Y
125	150	220	300	250	350	400	410	410	ATS 48C41Y
150	(1)	250	350	315	400	500	480	480	ATS 48C48Y
(1)	200	355	400	400	500	560	590	590	ATS 48C59Y
200	250	400	500	(1)	600	630	660	660	ATS 48C66Y
250	300	500	600	500	800	710	790	790	ATS 48C79Y
350	350	630	800	630	1000	900	1000	1000	ATS 48M10Y
400	450	710	1000	800	1200	(1)	1200	1200	ATS 48M12Y

Der Motorbemessungs-Betriebsstrom I_e darf den maximalen Dauerstrom in Klasse 10 nicht überschreiten.
(1) Keine Angabe eines Wertes, da es keinen entsprechenden Normmotor gibt.

Leistungsminderung in Abhängigkeit der Temperatur

Die Tabelle auf dieser Seite geht von einem Einsatz bei einer Umgebungstemperatur von maximal 40 °C aus. Der ATS 48 kann bis zu einer Umgebungstemperatur von 60 °C eingesetzt werden, vorausgesetzt dass der maximale Dauerstrom in Klasse 10 pro Grad über 40 °C um 2 % herabgestuft wird.
Beispiel: ATS 48D32Y bei 50 °C mit Herabstufung um 10 x 2 % = 20 %, 32 A werden zu 32 x 0,8 = 25,6 A (maximaler Nennstrom des Motors).

Anwendung mit Schweranlauf, Netz 208 / 690 V, Sanftanlasser in der Zuleitung

Motor							Sanftanlasser 208 / 690 V (+ 10 % - 15 %) - 50 / 60 Hz		
Motorleistung lt. Typenschild							Max. Dauerstrom in Klasse 20	Kaliber ICL	Typ Sanftanlasser
208 V	230 V	440 V	460 V	500 V	575 V	690 V			
HP	**HP**	**kW**	**HP**	**kW**	**HP**	**kW**	**A**	**A**	
2	3	5,5	7,5	7,5	10	11	12	17	ATS 48D17Y
3	5	7,5	10	9	15	15	17	22	ATS 48D22Y
5	7,5	11	15	11	20	18,5	22	32	ATS 48D32Y
7,5	10	15	20	18,5	25	22	32	38	ATS 48D38Y
10	(1)	18,5	25	22	30	30	38	47	ATS 48D47Y
(1)	15	22	30	30	40	37	47	62	ATS 48D62Y
15	20	30	40	37	50	45	62	75	ATS 48D75Y
20	25	37	50	45	60	55	75	88	ATS 48D88Y
25	30	45	60	55	75	75	88	110	ATS 48C11Y
30	40	55	75	75	100	90	110	140	ATS 48C14Y
40	50	75	100	90	125	110	140	170	ATS 48C17Y
50	60	90	125	110	150	160	170	210	ATS 48C21Y
60	75	110	150	132	200	200	210	250	ATS 48C25Y
75	100	132	200	160	250	250	250	320	ATS 48C32Y
100	125	160	250	220	300	315	320	410	ATS 48C41Y
125	150	220	300	250	350	400	410	480	ATS 48C48Y
150	(1)	250	350	315	400	500	480	590	ATS 48C59Y
(1)	200	355	400	400	500	560	590	660	ATS 48C66Y
200	250	400	500	(1)	600	630	660	790	ATS 48C79Y
250	300	500	600	500	800	710	790	1000	ATS 48M10Y
350	350	630	800	630	1000	900	1000	1200	ATS 48M12Y

Der Motorbemessungs-Betriebsstrom I_e darf den maximalen Dauerstrom in Klasse 20 nicht überschreiten.
(1) Keine Angabe eines Wertes, da es keinen entsprechenden Normmotor gibt.

Leistungsminderung in Abhängigkeit der Temperatur

Die Tabelle auf dieser Seite geht von einem Einsatz bei einer Umgebungstemperatur von maximal 40 °C aus. Der ATS 48 kann bis zu einer Umgebungstemperatur von 60 °C eingesetzt werden, vorausgesetzt dass der maximale Dauerstrom in Klasse 20 pro Grad über 40 °C um 2 % herabgestuft wird.
Beispiel: ATS 48D32Y bei 50 °C mit Herabstufung um 10 x 2 % = 20 %, 22 A werden zu 22 x 0,8 = 17,6 A (maximaler Nennstrom des Motors).

Abmessungen

ATS 48D17 • …C66 •

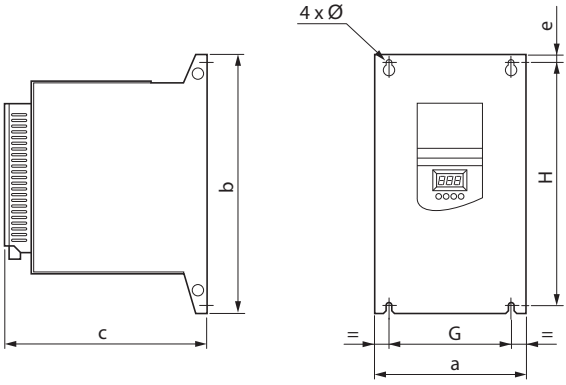

ATS 48	a mm	b mm	c mm	e mm	G mm	H mm	Ø mm	Gewicht kg
D17Q, D17Y D22Q, D22Y D32Q, D32Y D38Q, D38Y D47Q, D47Y	160	275	190	6,6	100	260	7	4,9
D62Q, D62Y D75Q, D75Y D88Q, D88Y C11Q, C11Y	190	290	235	10	150	270	7	8,3
C14Q, C14Y C17Q, C17Y	200	340	265	10	160	320	7	12,4
C21Q, C21Y C25Q, C25Y C32Q, C32Y	320	380	265	15	250	350	9	18,2
C41Q, C41Y C48Q, C48Y C59Q, C59Y C66Q, C66Y	400	670	300	20	300	610	9	51,4

Abmessungen

ATS 48C79 • …M12 •

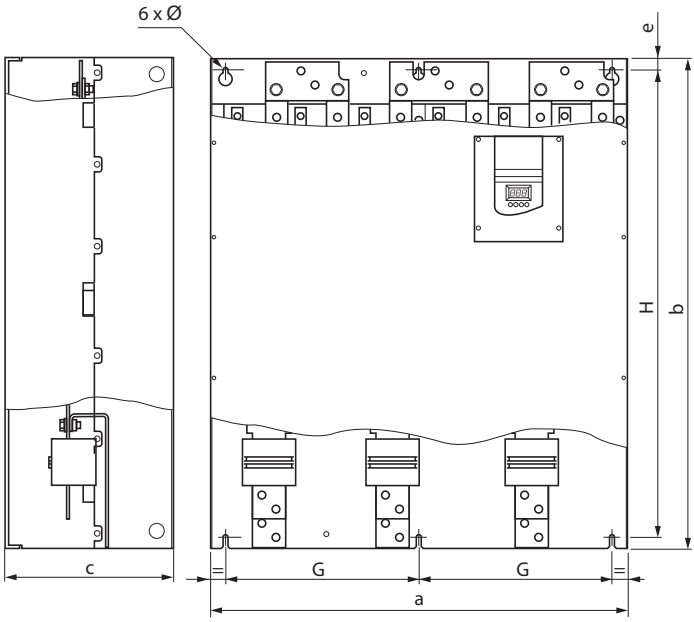

ATS 48	a mm	b mm	c mm	e mm	G mm	H mm	Ø mm	Gewicht kg
C79Q, C79Y M10Q, M10Y M12Q, M12Y	770	890	315	20	350	850	11	115

Vorsichtsmaßnahmen beim Einbau

Die Installation des Gerätes erfolgt vertikal, bis ± 10°.

Nicht in der Nähe von Wärmequellen einbauen, insbesondere wenn diese sich unter dem Gerät befinden.

Ausreichend Freiraum lassen, damit genug Luft für Kühlung zirkulieren kann. Das Gerät wird von unten nach oben belüftet.

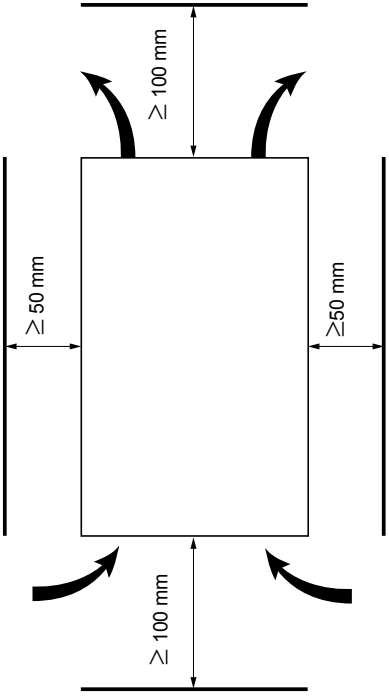

Darauf achten, dass keine Flüssigkeit, kein Staub oder leitender Gegenstand in den Sanftanlasser fällt (Schutzart IP00 von oben)

Belüftung des Sanftanlassers

Bei den mit einem Lüfter ausgestatteten Baugrößen schaltet sich dieser automatisch ein, sobald die Temperatur des Kühlkörpers 50 °C erreicht. Sobald die Temperatur wieder auf 40 °C absinkt, schaltet er sich aus.

Durchsatz der geräteinternen Lüfter:

ATS 48 D32 • und D38 • : 14 m^3/Stunde
ATS 48 D47 • : 28 m^3/Stunde
ATS 48 D62 • bis C11 • : 86 m^3/Stunde
ATS 48 C14 • und C17 • : 138 m^3/Stunde
ATS 48 C21 • bis C32 • : 280 m^3/Stunde
ATS 48 C41 • bis C66 • : 600 m^3/Stunde
ATS 48 C79 • bis M12 • : 1200 m^3/Stunde

Einbau in ein Gehäuse oder einen Schaltschrank

Gehäuse oder Schaltschrank aus Metall (Schutzart IP23)

Die Einbauempfehlungen auf der vorhergehenden Seite müssen beachtet werden.

Zur Gewährleistung der Luftzirkulation im Sanftanlasser:

- Belüftungsschlitze vorsehen
- Prüfen, ob die Belüftung ausreicht. Falls nicht, Fremdbelüftung gegebenenfalls mit einem Filter installieren

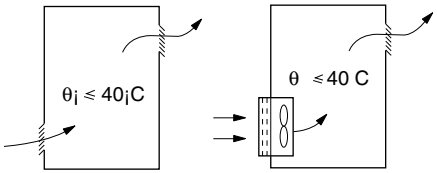

Verlustleistung der Sanftanlasser, ohne By-Pass Betrieb (Überbrückungsschütz), bei Betrieb mit Nennstrom

Typ Sanftanlasser ATS 48	Leistung in W	Typ Sanftanlasser ATS 48	Leistung in W
D17Q, D17Y	59	C21Q, C21Y	580
D22Q, D22Y	74	C25Q, C25Y	695
D32Q, D32Y	104	C32Q, C32Y	902
D38Q, D38Y	116	C41Q, C41Y	1339
D47Q, D47Y	142	C48Q, C48Y	1386
D62Q, D62Y	201	C59Q, C59Y	1731
D75Q, D75Y	245	C66Q, C66Y	1958
D88Q, D88Y	290	C79Q, C79Y	2537
C11Q, C11Y	322	M10Q, M10Y	2865
C14Q, C14Y	391	M12Q, M12Y	3497
C17Q, C17Y	479		

Hinweis: Wenn die Sanftanlasser überbrückt sind, kann ihre Verlustleistung vernachlässigt werden (zwischen 15 und 30 W).

- Leistungsaufnahme Steuerteil (alle Baugrößen): 25 W ohne Lüfter
- Leistungsaufnahme Steuerteil mit Lüfter:

Sanftstart	Leistungsaufnahme (W)	Scheinleistung (VA)
ATS 48D17● to C17●	30	80
ATS 48C21● to C32●	50	130
ATS 48C41● to M12●	80	240

Leistungsklemmenleisten

Klemmen	Funktionen	Maximale Anschlusskapazität Anzugsmoment der Klemmen					
		ATS 48 D17 • D22 • D32 • D38 • D47 •	ATS 48 D62 • D75 • D88 • C11 •	ATS 48 C14 • C17 •	ATS 48 C21 • C25 • C32 •	ATS 48 C41 • C48 • C59 • C66 •	ATS 48 C79 • M10 • M12 •
⏚	Erdungsklemmen mit Anschluss an die Erde	10 mm^2 1,7 Nm	16 mm^2 3 Nm	120 mm^2 27 Nm	120 mm^2 27 Nm	240 mm^2 27 Nm	2x240 mm^2 27 Nm
		8 AWG 15 lb.in	4 AWG 26 lb.in	Schiene 238 lb.in	Schiene 238 lb.in	Schiene 238 lb.in	Schiene 238 lb.in
1/L1 3/L2 5/L3	Leistungsversorgung	16 mm^2 3 Nm	50 mm^2 10 Nm	95 mm^2 34 Nm	240 mm^2 34 Nm	2x240 mm^2 57 Nm	4x240 mm^2 57 Nm
		8 AWG 26 lb.in	2/0 AWG 88 lb.in	2/0 AWG 300 lb.in	Schiene 300 lb.in	Schiene 500 lb.in	Schiene 500 lb.in
2/T1 4/T2 6/T3	Ausgänge zum Motor	16 mm^2 3 Nm	50 mm^2 10 Nm	95 mm^2 34 Nm	240 mm^2 34 Nm	2x240 mm^2 57 Nm	4x240 mm^2 57 Nm
		8 AWG 26 lb.in	2/0 AWG 88 lb.in	2/0 AWG 300 lb.in	Schiene 300 lb.in	Schiene 500 lb.in	Schiene 500 lb.in
A2 B2 C2	Überbrücken des Sanftanlassers (By-Pass)	16 mm^2 3 Nm	50 mm^2 10 Nm	95 mm^2 34 Nm	240 mm^2 34 Nm	2x240 mm^2 57 Nm	4x240 mm^2 57 Nm
		8 AWG 26 lb.in	2/0 AWG 88 lb.in	2/0 AWG 300 lb.in	Schiene 300 lb.in	Schiene 500 lb.in	Schiene 500 lb.in

Anordnung der Leistungsklemmen, ATS 48D17 • bis C11 •

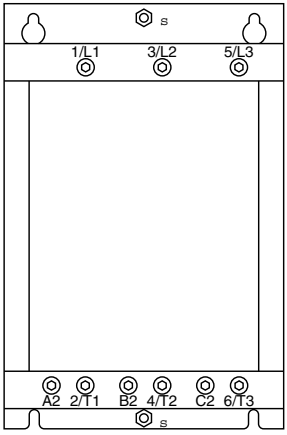

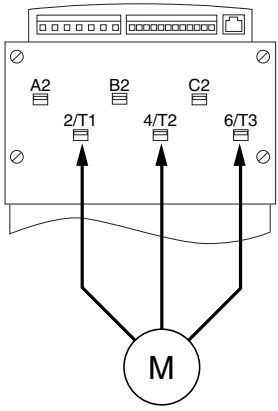

Anschluss des Motors an 2/T1, 4/T2, 6/T3

Anordnung der Leistungsklemmen, ATS 48C14 • und C17 •

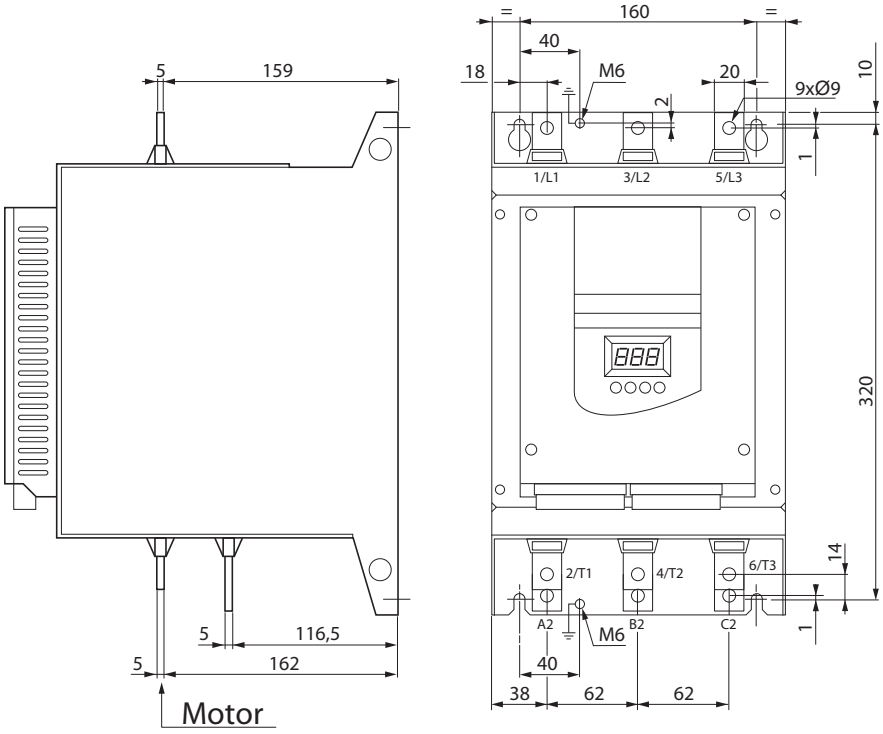

Anordnung der Leistungsklemmen, ATS 48C21 • bis C32 •

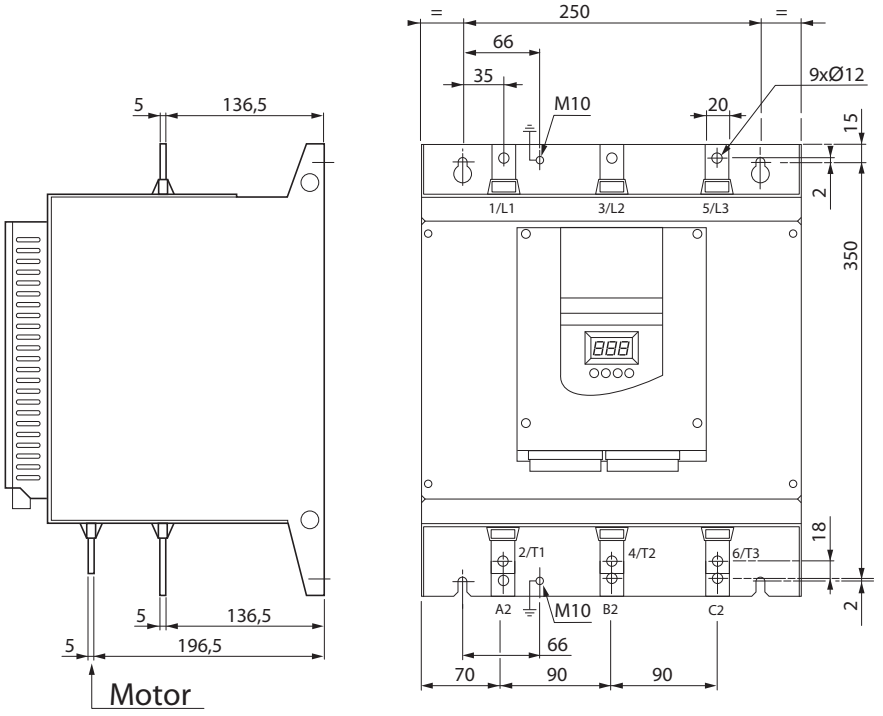

Leistungsklemmenleisten

Anordnung der Leistungsklemmen, ATS 48C41 • bis C66 •

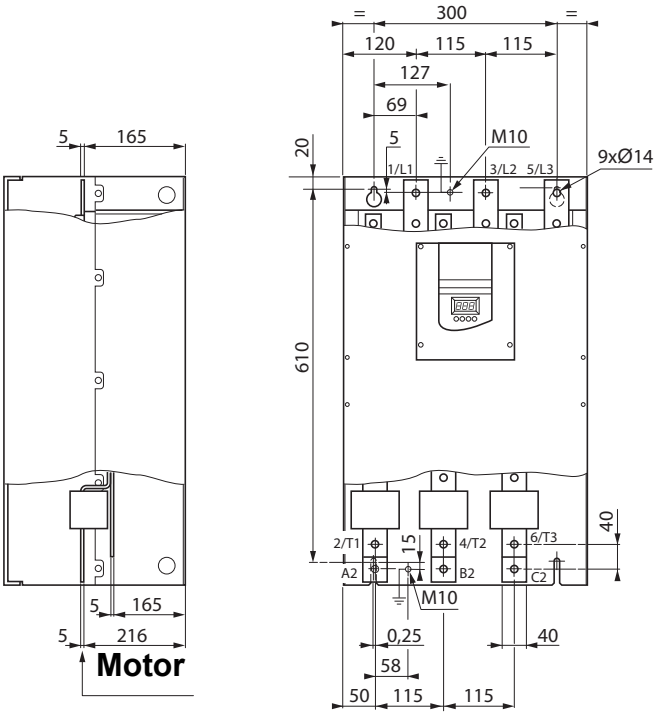

DEUTSCH

Anordnung der Leistungsklemmen, ATS 48C79 • bis M12 •

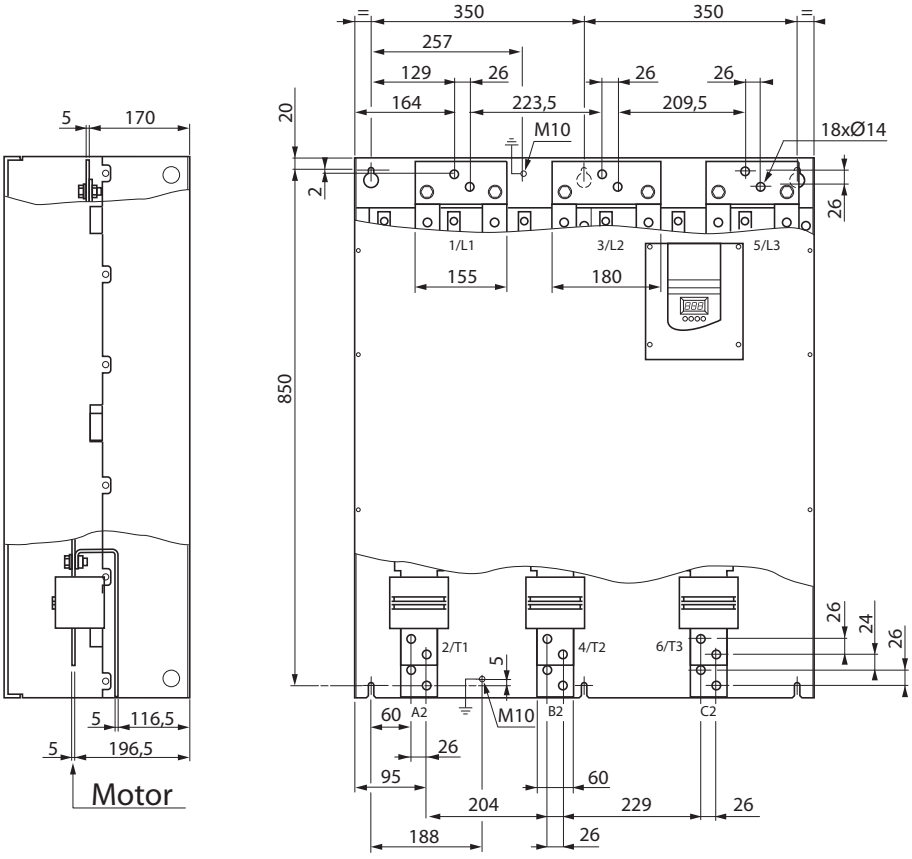

Steuerklemmenleisten

Die Steuerklemmenleisten besitzen steckbare Klemmen mit Verwechselungsschutz.

Maximale Anschlusskapazität : 2,5 mm2 (12 AWG)
Maximales Anzugsmoment : 0,4 Nm (3,5 lb.in)

Bei den Sanftanlassern ATS 48C17 • bis M12 • muss für den Zugang zu den Steuerklemmenleisten die Schutzabdeckung entfernt werden.

Elektrische Kenndaten

Klemmen	Funktion	Technische Daten
CL1 CL2	Spannungsversorgung des Steuerteils des Altistart	ATS 48 • • • Q : 220 bis 415 V + 10% - 15%, 50 / 60 Hz ATS 48 • • • Y : 110 bis 230 V + 10% - 15%, 50 / 60 Hz Leistungsaufnahme 187.
R1A R1C	Schließer (NO) des programmierbaren Relais r1	Minimales Schaltvermögen: • 10 mA bei 6 V ⎓ Maximales Schaltvermögen bei induktiver Belastung (cos φ = 0,5 und L/R = 20 ms): • 1,8 A bei 230 V ⎓ und 30 V ∿ Spannung maximal 400 V
R2A R2C	Schließer (NO) des Relais für das Ende des Anlaufvorgangs r2	
R3A R3C	Schließer (NO) des programmierbaren Relais r3	
STOP RUN LI3 LI4	Sanftanlasser AUS (logisch 0 = AUS) Sanftanlasser EIN (logisch 1 = EIN, wenn STOP auf logisch 1) Programmierbarer Eingang Programmierbarer Eingang	4 Logikeingänge 24 V mit einer Impedanz von 4,3 kΩ Umax = 30 V, Imax = 8 mA logisch 1: U > 11 V - I > 5 mA logisch 0: U < 5 V - I < 2 mA
24V	Spannungsversorgung der Logikeingänge	+ 24V ± 25% getrennt und geschützt vor Kurzschlüssen und Überlastung, maximaler Strom: 200þmA
LO+	Spannungsversorgung der Logikausgänge	Anschluss an 24 V oder eine externe Spannungsquelle
LO1 LO2	Programmierbare Logikausgänge	2 Ausgänge mit Open Collector, kompatibel mit SPS-Steuerungen Niveau 1, Norm IEC 65A-68 • Spannungsversorgung +24 V (min. 12 V, max. 30 V) • Max. Strom 200 mA pro Ausgang bei einer externen Spannungsquelle
AO1	Programmierbarer Analogausgang	Ausgang konfigurierbar für 0 - 20 mA oder 4 - 20 mA • Genauigkeit ± 5 % des maximalen Wertes, max. Lastimpedanz 500 Ω
COM	Gemeinsamer der Ein-und Ausgänge	0 V
PTC1 PTC2	Eingang für PTC-Fühler	Gesamtwiderstand des Fühler-Schaltkreises 750 Ω bei 25 °C (z. B. 3 Fühler von 250 Ω in Reihe)
(RJ 45)	Steckbuchse für • Bedienterminal • Power Suite • Kommunikationsbus	RS 485 Modbus

Anordnung der Steuerklemmen

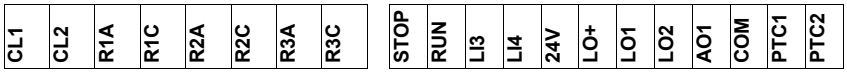

(RJ 45)

Empfehlungen zur Verdrahtung

Leistungsteil

Die Empfehlungen für Kabelquerschnitte befolgen, die in den Normen angegeben sind.

Der Sanftanlasser muss geerdet werden, um die Vorschriften hinsichtlich der Ableitströme zu erfüllen. Wenn die Installationsvorschriften einen Einsatz eines F1-Schutzschalters vorsehen, müssen Sie ein Gerät vom Typ A-Si verwenden, das ein versehentliches Auslösen beim Einschalten vermeidet. Prüfen Sie die Vereinbarkeit mit den anderen Schutzgeräten. Wenn mehrere Sanftanlasser an einer Netzzuleitung installiert sind, muss jeder Sanftanlasser separat geerdet werden. Es wird empfohlen, gegebenenfalls eine Netzdrossel vorzusehen (siehe Katalog).

Die Leistungskabel getrennt von den niedrigpegeligen Signalkreisen in der Installation (Detektoren, SPS-Steuerungen, Messvorrichtungen, Video, Telefon) verlegen.

Steuerteil

Die Steuerkreise und Leistungskabel voneinander getrennt halten.

Funktionen der Logikeingänge RUN und STOP (Siehe Schaltungsempfehlung 196)

2-Draht-Steuerung

EIN und AUS werden durch logisch 1 (EIN) oder 0 (AUS) gesteuert, die gleichzeitig an den Eingängen RUN und STOP berücksichtigt werden.

Beim Einschalten oder einem manuellen Reset nach einer Störung läuft der Motor wieder an, wenn der Befehl RUN vorliegt.

3-Draht-Steuerung

EIN und AUS werden über 2 verschiedene Logikeingänge gesteuert.
Das Anhalten wird durch das Öffnen (logisch 0) des Eingangs STOP erreicht.
Der Impuls des Eingangs RUN wird bis zum Öffnen des Eingangs STOP gespeichert.

Bei einem Einschalten oder einem manuellen Reset nach einer Störung bzw. nach einem Haltebefehl kann der Motor erst nach dem Öffnen (logisch 0) und einem anschließenden neuen Impuls (logisch 1) am Eingang RUN wieder anlaufen.

ATS 48: 1 Drehrichtung mit Netzschütz, Anhalten im freien Auslauf, Koordination Typ 1

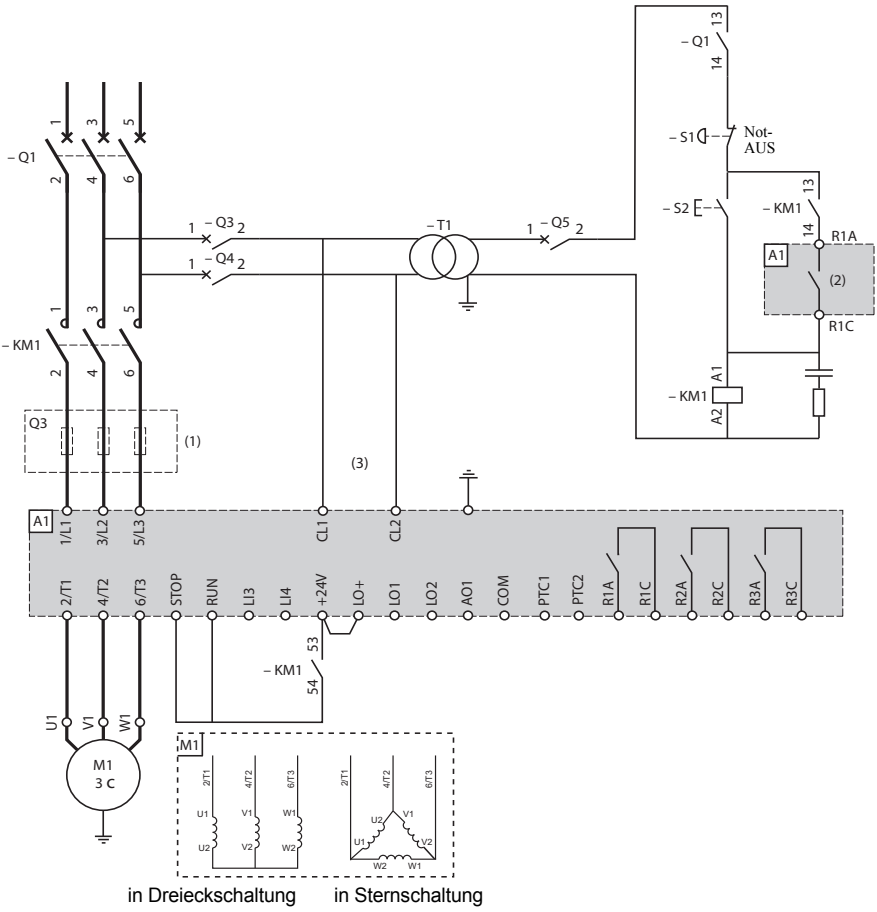

(1)Einsatz superflinker Sicherungen bei einer Koordination Typ 2 (gemäß IEC 60 947-4-2).
(2)Belegung von Relais R1: Netzschützansteuerung (r1l). Siehe “Elektrische Kenndaten”, Seite 193. Beachten Sie die Einsatzgrenzen des Kontaktes, bei Schützen großer Baugröße ggf. Koppelschütz vorsehen.
(3)Einen Transformator integrieren, wenn die Netzspannung von der für den Steuerteil des ATS 48 zulässigen Spannung abweicht. Siehe “Elektrische Kenndaten”, Seite 193.

ATS 48: 1 Drehrichtung mit Netzschütz, Überbrückungsschaltung (By-Pass), freier oder geführter Auslauf, Koordination Typ 1

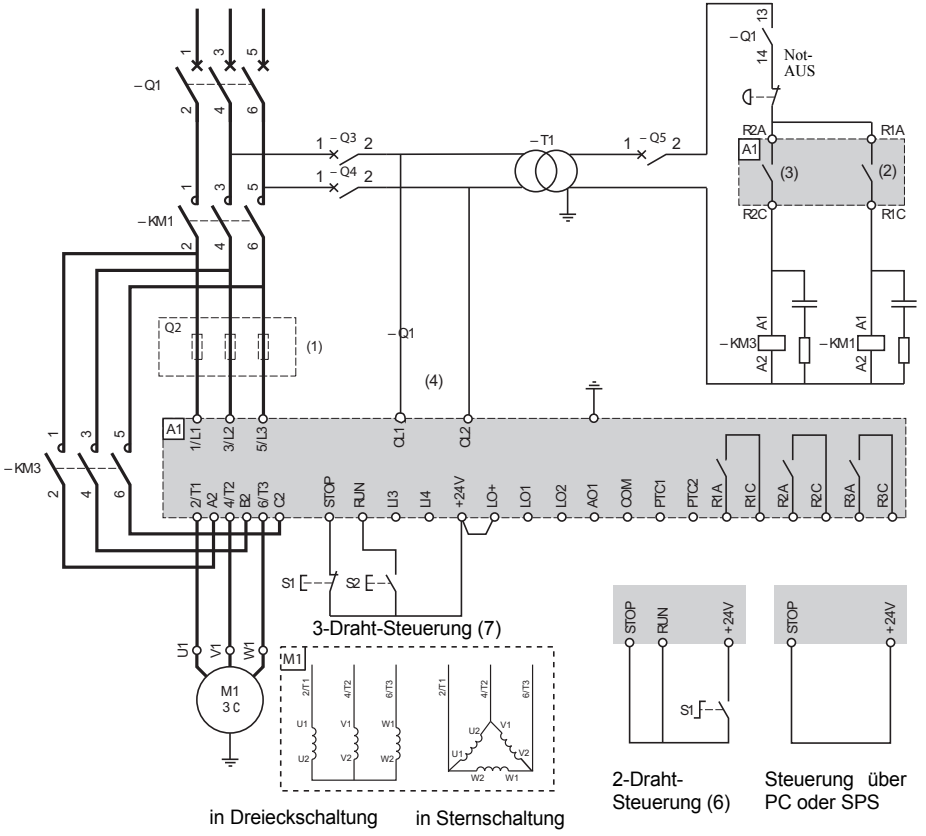

(1) Einsatz superflinker Sicherungen bei einer Koordination Typ 2 (gemäß IEC 60 947-4-2).
(2) Belegung von Relais R1: Netzschützansteuerung (r1I). Beachten Sie die Einsatzgrenzen des Kontaktes, bei Schützen großer Baugröße ggf. Koppelschütz vorsehen. Siehe “Elektrische Kenndaten”, Seite 193.
(3) Beachten Sie die Einsatzgrenzen des Kontaktes, bei Schützen großer Baugröße ggf. Koppelschütz vorsehen.
Siehe “Elektrische Kenndaten”, Seite 193.
(4) Einen Transformator integrieren, wenn die Netzspannung von der für den Steuerteil des ATS 48 zulässigen Spannung abweicht. Siehe “Elektrische Kenndaten”, Seite 193.
(5) Siehe “2-Draht-Steuerung”, Seite 194.
(6) Siehe “3-Draht-Steuerung”, Seite 194.

ATS 48: 1 Drehrichtung, freier Auslauf, Koordination Typ 1, mit Netzschütz Überbrückungsschaltung (By-Pass), Wurzel-3-Schaltung im Motor, ATS 48•••Q oder ATS 48•••YS 316.

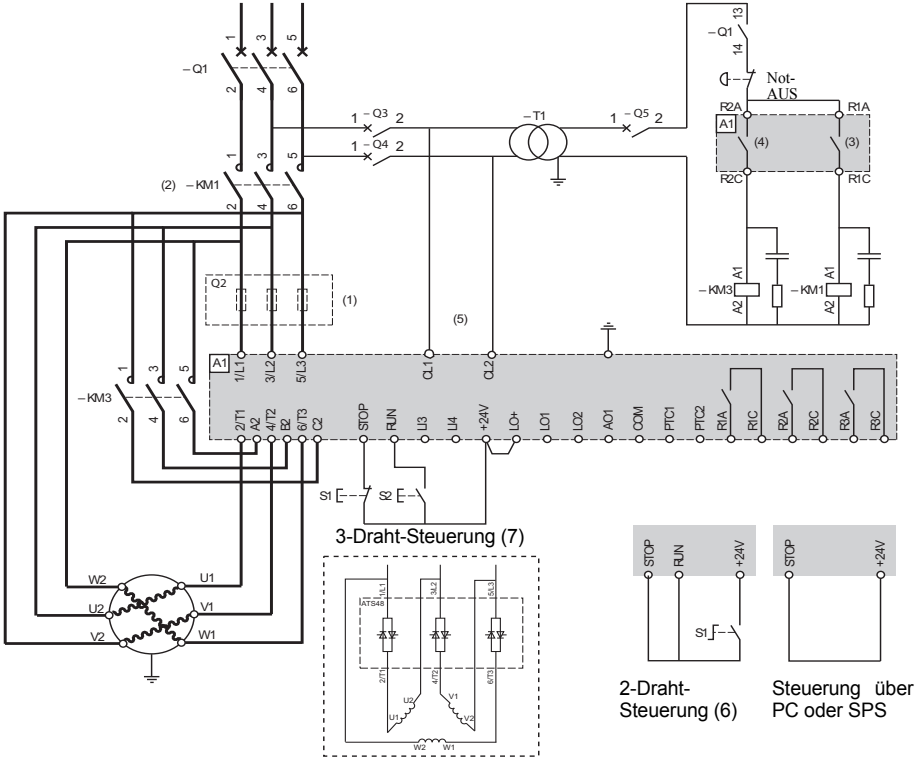

Schaltung in der Dreieckwicklung des Motors

Hinweis: Einstellen dIt auf on (voir “Menü "Zusätzliche Einstellungen" drC”, Seite 222)

(1)Einsatz superflinker Sicherungen bei einer Koordination Typ 2 (gemäß IEC 60 947-4-2).

(2)Verwendung von KM1 obligatorisch. Es muß ein externer thermischer Schutz vorgesehen werden type Vigirex pour Compact NS 80, bloc Vigi pour Compact NS 400 à 630, consulter le catalogue Merlin Gérin pour les calibres supérieurs.

(3)Belegung von Relais R1: Netzschützansteuerung (r1l). Beachten Sie die Einsatzgrenzen des Kontaktes, bei Schützen großer Baugröße ggf. Koppelschütz vorsehen. Siehe “Elektrische Kenndaten”, Seite 193.

(4)Beachten Sie die Einsatzgrenzen des Kontaktes, bei Schützen großer Baugröße ggf. Koppelschütz vorsehen. Siehe “Elektrische Kenndaten”, Seite 193.

(5)Einen Transformator integrieren, wenn die Netzspannung von der für den Steuerteil des ATS 48 zulässigen Spannung abweicht. Siehe “Elektrische Kenndaten”, Seite 193.

(6)Siehe “2-Draht-Steuerung”, Seite 194.

(7)Siehe “3-Draht-Steuerung”, Seite 194.

(8)Inductances de lignes éventuelles

Wenn das Überbrückungsschütz (By-Pass) eingesetzt wird, kann die Erkennung der Störung "PHF" verlängert werden.

ATS 48: 1 Drehrichtung, freier oder geführter Auslauf, Netzschütz, Überbrückungsschaltung (By-Pass), Motor kleine/große Drehzahl mit zwei Parametersätzen

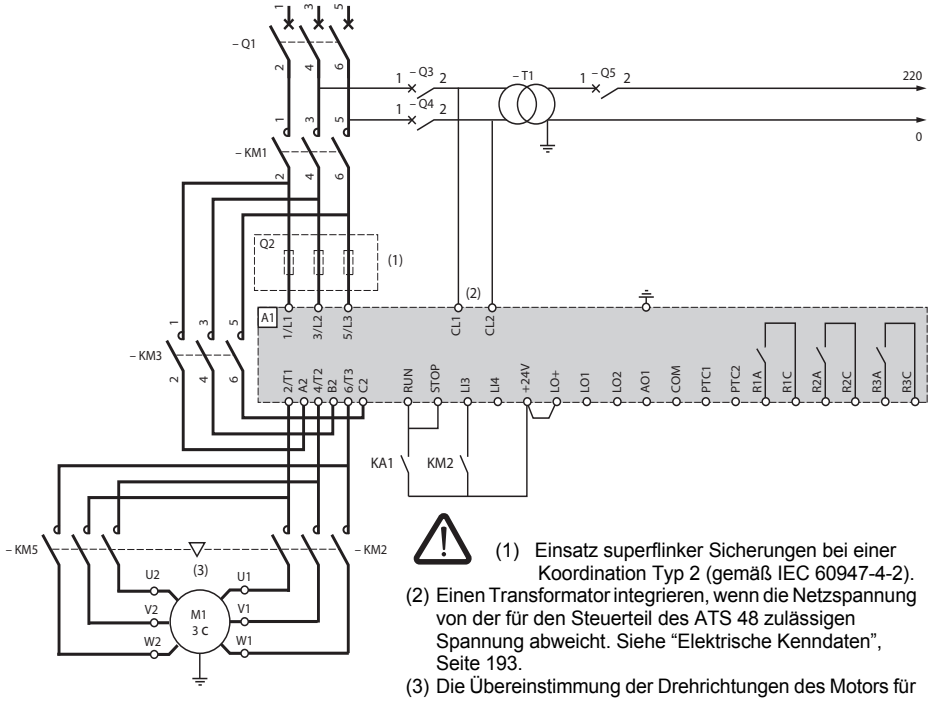

(1) Einsatz superflinker Sicherungen bei einer Koordination Typ 2 (gemäß IEC 60947-4-2).

(2) Einen Transformator integrieren, wenn die Netzspannung von der für den Steuerteil des ATS 48 zulässigen Spannung abweicht. Siehe “Elektrische Kenndaten”, Seite 193.

(3) Die Übereinstimmung der Drehrichtungen des Motors für die beiden Drehzahlen überprüfen.

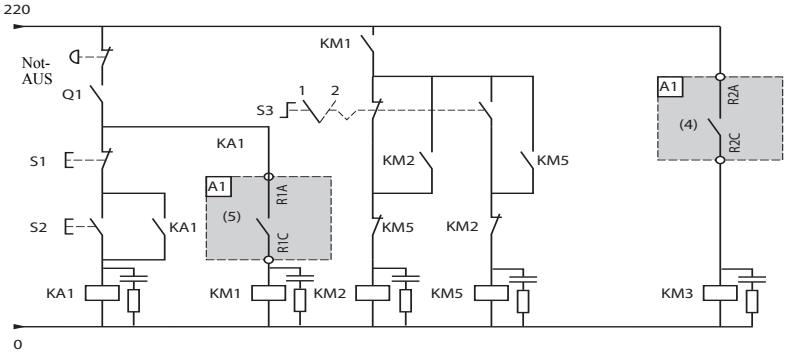

(4) Beachten Sie die Einsatzgrenzen des Kontaktes, bei Schützen großer Baugröße ggf. Koppelschütz vorsehen. Siehe “Elektrische Kenndaten”, Seite 193.

(5) Belegung von Relais R1: Netzschützansteuerung (r1I). Beachten Sie die Einsatzgrenzen des Kontaktes, bei Schützen großer Baugröße ggf. Koppelschütz vorsehen. Siehe “Elektrische Kenndaten”, Seite 193.
LI3 = LIS (zweiter Parametersatz Motor)
S3: 1 = kleine Drehzahl, 2 = große Drehzahl

ATS 48: 1 Drehrichtung mit Netzschütz, Anlauf und Auslauf mehrerer Motoren in Kaskadenschaltung mit einem einzigen Altistart

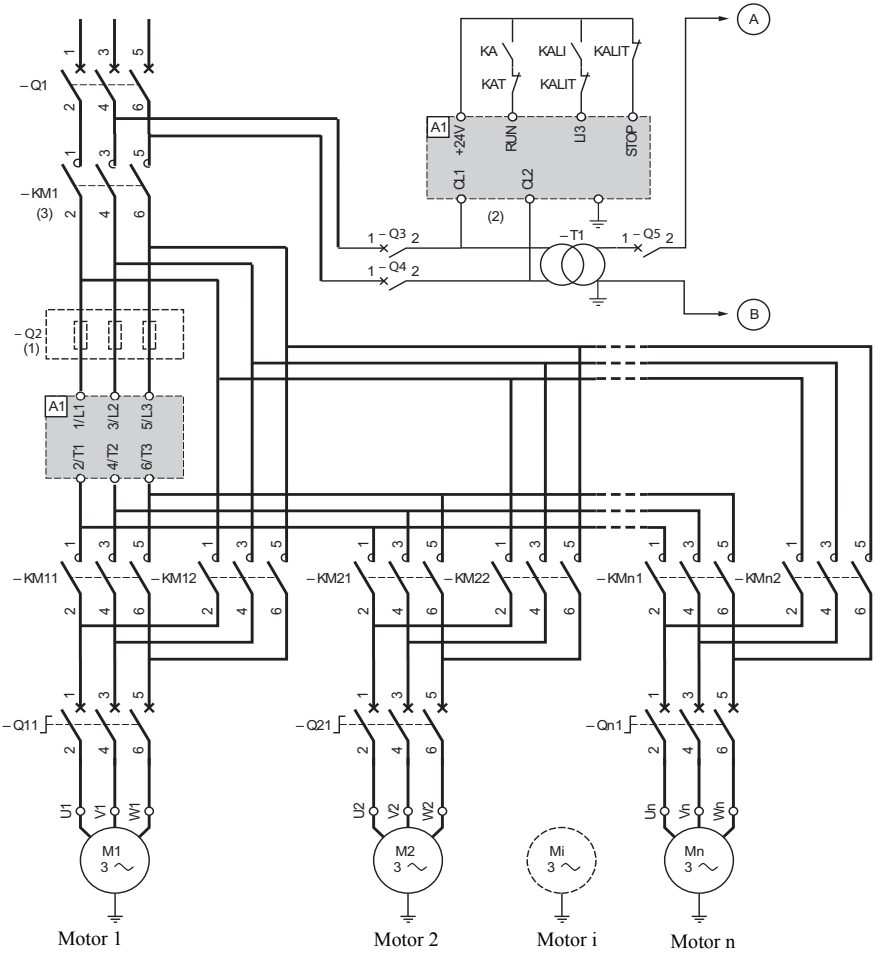

(1) Einsatz von Sicherungen bei einer Koordination Typ 2 (gemäß IEC 60 947-4-2).
(2) Einen Transformator integrieren, wenn die Netzspannung von der für den Steuerteil des ATS 48 zulässigen Spannung abweicht. Siehe “Elektrische Kenndaten”, Seite 193.
(3) KM1 muss in Bezug auf die Gesamtleistung des Motors ausgewählt werden.

Wichtig:
- Ein Logikeingang des ATS48 muss in "Kaskadenbetrieb" (LI3 = LIC) konfiguriert werden. Siehe “Aktivierung der Funktion "Kaskadenbetrieb"”, Seite 224.
- Bei einer Störung können die dann in Betrieb befindlichen Motoren nicht herunter geführt oder gebremst werden.
- Stellen Sie den thermischen Schutz des Leistungsschalters Qn1 auf den Motornennstrom ein.

ATS 48: 1 Drehrichtung mit Netzschütz, Anlauf und Auslauf mehrerer Motoren in Kaskadenschaltung mit einem einzigen Altistart.

Steuerung Motor 1

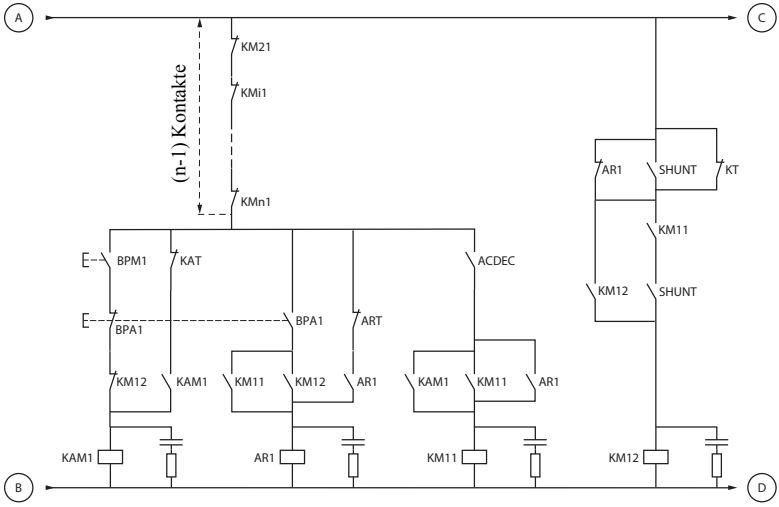

Steuerung Motor 2

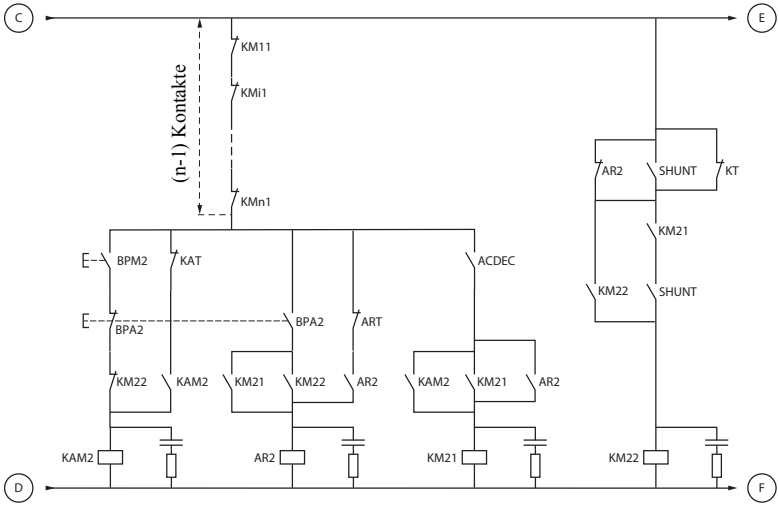

BPM1: Taster "EIN" Motor 1
BPM2: Taster "EIN" Motor 2

BPA1: Taster "AUS" Motor 1
BPA2: Taster "AUS" Motor 2

ATS 48: 1 Drehrichtung mit Netzschütz, Anlauf und Auslauf mehrerer Motoren in Kaskadenschaltung mit einem einzigen Altistart.

Steuerung Motor n

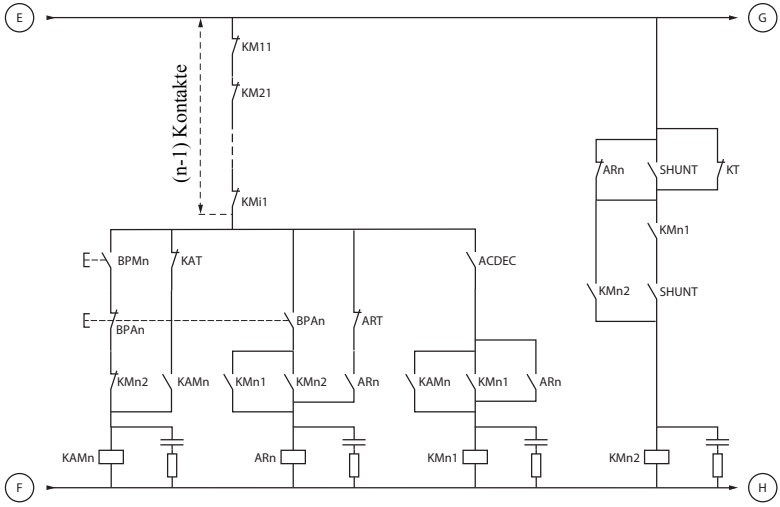

Steuerung der Kaskade

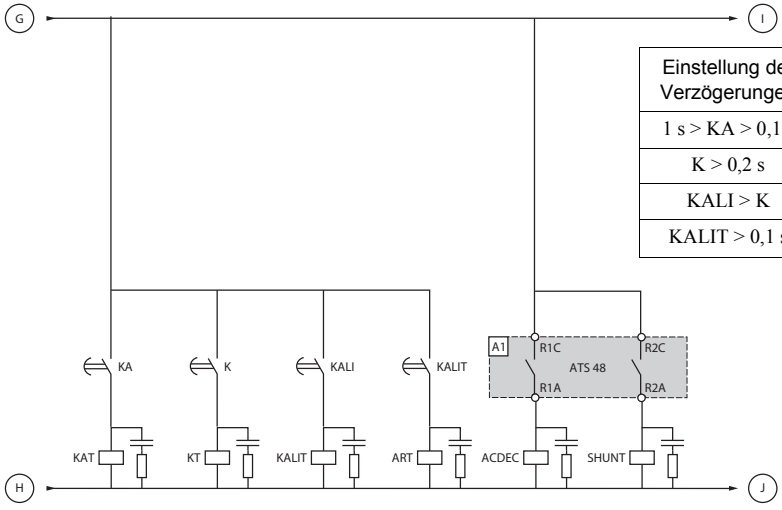

Einstellung der Verzögerungen
1 s > KA > 0,1 s
K > 0,2 s
KALI > K
KALIT > 0,1 s

BPM_N: Taster "EIN" Motor n
BPAn: Taster "AUS" Motor n

R1 muss als Netzschützansteuerung konfiguriert werden (r1 = r1I)

Zwischen zwei aufeinanderfolgenden Haltebefehlen: auf das Ende der Verzögerungszeit KALIT warten

ATS 48: 1 Drehrichtung mit Netzschütz, Anlauf und Auslauf mehrerer Motoren in Kaskadenschaltung mit einem einzigen Altistart.

Steuerung der Kaskade

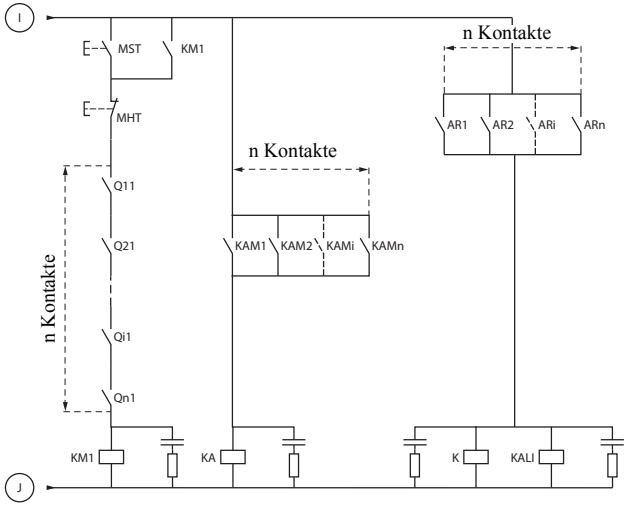

MST: Taster "EIN" allgemein
MHT: Taster "AUS" allgemein.

ATS 48: 1 Drehrichtung mit Netzschütz, Anlauf und Auslauf mehrerer Motoren in Kaskadenschaltung mit einem einzigen Altistart.

Erklärung der vollständigen Sequenz.

Mit MST starten, damit KM1 (Netzschütz) anzieht

1 - 2 - 3

BPM1 drücken, um Motor 1 zu starten. BPM2 drücken, um Motor 2 zu starten, und BPMn drücken, um Motor n zu starten.
Wenn BPM1 betätigt ist, zieht KAM1 an, ebenso KM11, da ACDEC angezogen hat (der ATS48 ist mit MST und KM1 eingeschaltet).
KA zieht an, da KAM1 geschlossen ist. Nach einer einstellbaren Zeit zieht auch KAT an.

4 - 5

Der ATS48 startet den Motor, da ein Fahrbefehl auf RUN mit KA und KAT erteilt wurde.
KAM1 fällt über KAT wieder ab.
KM11 bleibt geschlossen.

6 - 7

Am Ende des Anlaufvorgangs zieht R2 des ATS48 an, SHUNT ist geschlossen, KM12 ist über SHUNT geschlossen, und KM11 bleibt geschlossen.

8 - 9

Nach einem kurzen Augenblick fällt R2 und ebenso R1 wieder ab (Funktion zur Überbrückung des Sanftanlassers).
KM11 öffnet sich, da ACDEC offen ist.
Der Motor bleibt über KM12 in Betrieb.
Der die ATS48 zeigt eine Status-Code.

Zum Starten eines weiteren Motors wird dieselbe Logik eingehalten. Zum Starten des Motors n verwenden Sie BPMn und zum Anhalten des Motors n BPAn. Jeder beliebige Motor kann in jeder beliebigen Reihenfolge gestartet und angehalten werden.

BPA1 drücken, um Motor 1 anzuhalten. AR1 schließt sich

a - b - c - d

K und KALI sind geschlossen.
LI des ATS48 empfängt einen Befehl von KALI und KALIT (LI muss auf den Wert LIC eingestellt werden).
R1 und R2 des ATS48 ziehen an (ein Impuls auf R2 und R1 bleibt geschlossen, bis der Motor vollständig angehalten hat).

e

KM11 schließt sich.
Nach einer einstellbaren Zeit ziehen KT und KALIT an.

f

Der ATS48 empfängt einen Haltebefehl über KALIT.

g

KM12 fällt ab.
Der ATS48 verzögert den Motor.

h

R1 des ATS48 öffnet sich, wenn der Motor vollständig angehalten hat.

i

KM11 öffnet sich.
Der ATS48 ist zum Starten oder Anhalten eines weiteren Motors bereit.

ATS 48: 1 Drehrichtung mit Netzschütz, Anlauf und Auslauf mehrerer Motoren in Kaskadenschaltung mit einem einzigen Altistart.

Steuerungsdiagramm

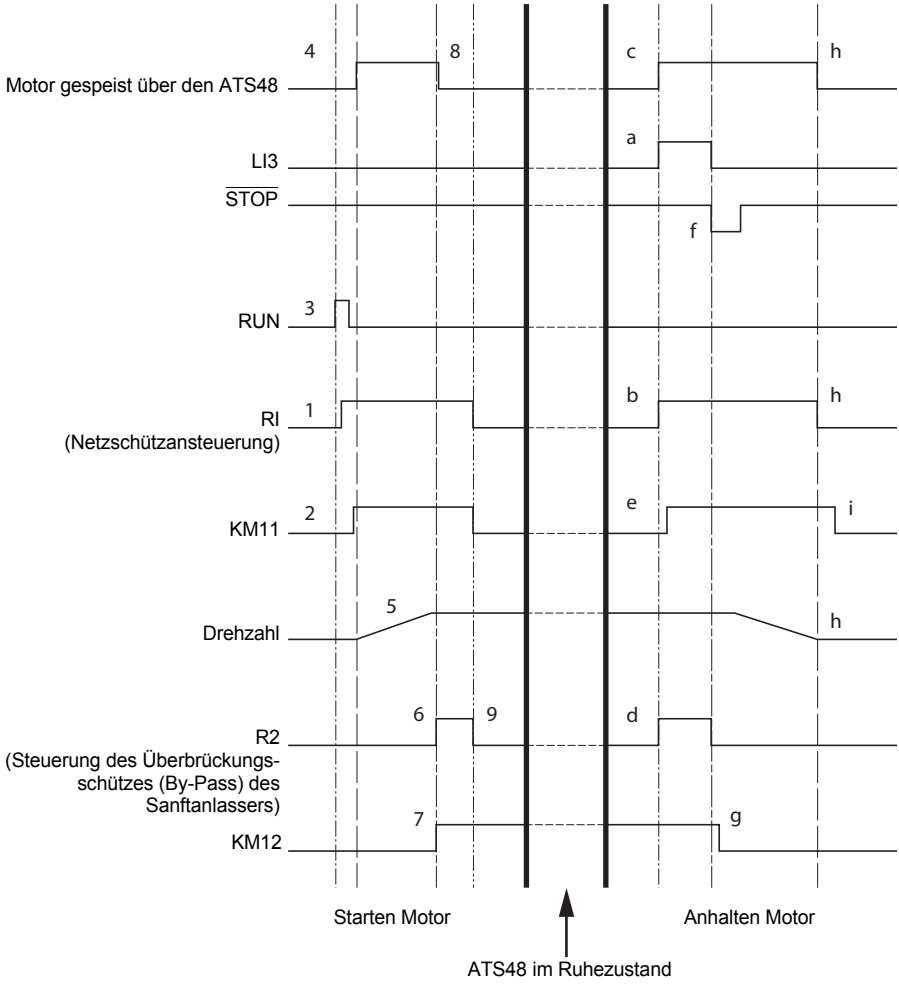

Thermische Schutzvorrichtungen

Thermischer Schutz des Sanftanlassers

Thermischer Schutz über PTC-Fühler auf dem Kühlkörper und durch Berechnung der Erwärmung der Thyristoren.

Thermischer Schutz des Motors

Der Sanftanlasser berechnet andauernd die Erwärmung des Motors ausgehend vom eingestellten Nennstrom In und dem tatsächlich aufgenommenen Strom.

Die Erwärmungen können durch eine geringe oder starke Überlastung mit langer oder kurzer Dauer beeinflusst werden. Die Auslösekennlinien auf den folgenden Seiten wurden in Abhängigkeit des Verhältnisses zwischen dem Anlaufstrom I_A und dem (einstellbaren) Motorstrom I_e erstellt.

Die Norm IEC60947-4-2 legt die Auslöseklassen fest und gibt dabei die Anlaufkapazitäten des Motors in warmem und kaltem Zustand ohne Auftreten von thermischen Störungen an. Die verschiedenen Auslöseklassen werden für KALTEN Zustand (entspricht einem stabilisierten thermischen Zustand des Motors ohne Spannung) und WARMEN Zustand (entspricht einem stabilisierten thermischen Zustand des Motors bei Nennleistung) angegeben.

Werkseitig wird der Sanftanlasser auf Auslöseklasse 10 eingestellt.
Diese Auslöseklasse kann über das Menü PrO verändert werden.

Der vom Sanftanlasser angezeigte thermische Schutz entspricht der Zeitkonstante von Eisen.
- ein Überlastalarm, der ausgelöst wird, wenn der Motor seinen Schwellwert für die Nennerwärmung überschreitet (thermischer Zustand des Motors = 110 %).
- eine thermische Störung, die den Motor bei Überschreiten des kritischen Erwärmungsschwellwertes anhält (thermischer Zustand des Motors = 125 %).

Bei einem langen Hochlauf kann der Sanftanlasser mit einer Störung oder einem thermischen Alarm auslösen, obwohl ein Wert angezeigt wird, der unter dem Auslösewert liegt.

Die thermische Störung kann über das Relais R1 angezeigt werden, falls der thermische Schutz nicht aufgehoben wurde.

Nach einem Anhalten des Motors oder einem Ausschalten des Sanftanlassers wird die Berechnung des thermischen Zustands fortgesetzt, selbst wenn die Steuerung nicht mit Spannung versorgt wird. Die thermische Überwachung des Altistart verhindert den Wiederanlauf des Motors, wenn seine Erwärmungszustand noch zu hoch ist.

Bei Einsatz eines Sondermotors (explosionsgeschützter Motor, Tauchmotor,...) muss ein thermischer Schutz über PTC-Fühler vorgesehen werden.

Thermischer Schutz des Motors

Auslösekennlinien in kaltem Zustand

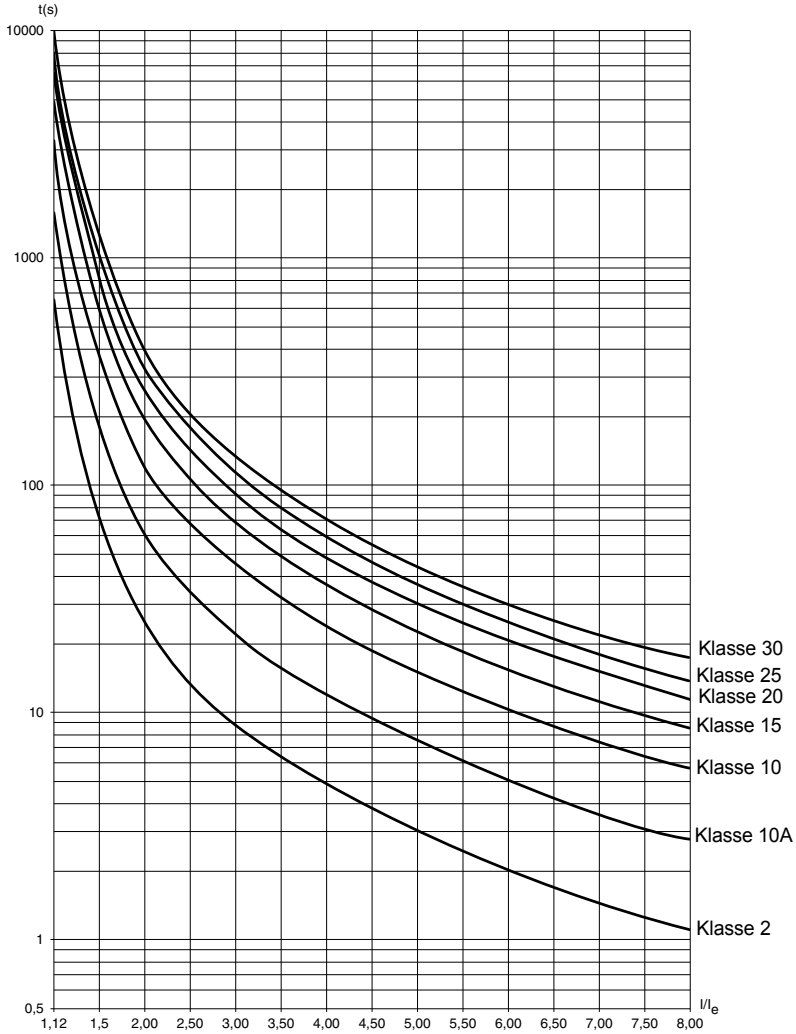

Auslösezeit für Standardbetrieb (Klasse 10)		Auslösezeit für Schweranlauf (Klasse 20)	
3 I_e	5 I_e	3,5 I_e	5 I_e
46 s	15 s	63 s	29 s

Thermischer Schutz des Motors

Auslösekennlinien in warmem Zustand

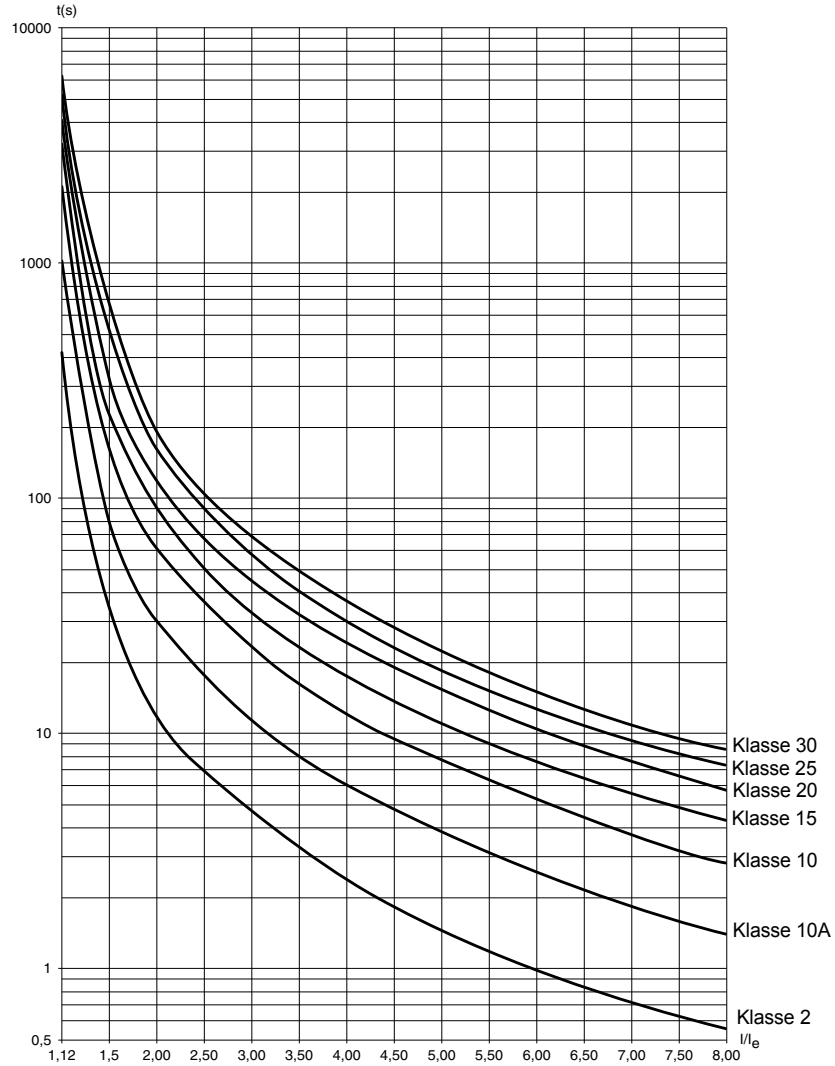

Auslösezeit für Standardbetrieb (Klasse 10)		Auslösezeit für Schweranlauf (Klasse 20)	
3 I_e	5 I_e	3,5 I_e	5 I_e
23 s	7,5 s	32 s	15 s

Thermischer Schutz des Motors über PTC-Fühler

An der Klemmenleiste der Steuerkarte können in den Motor integrierte PTC-Fühler angeschlossen werden, die die Temperatur des Motors messen. Diese analoge Information wird vom Sanftanlasser verwaltet.

Die Verarbeitung der Information " thermisches Überschreiten PTC-Fühler " kann auf zwei verschiedene Arten eingesetzt werden:

- Anhalten über Störung, wenn das Signal aktiviert ist
- Alarm, wenn das Signal aktiviert ist. Dieser Alarm kann in einem Statuswort des Sanftanlassers (serielle Schnittstelle) oder über einen konfigurierbaren Logikausgang angezeigt werden

Hinweis:
Der Schutz über PTC-Fühler deaktiviert nicht den über eine Berechnung ausgeführten thermischen Schutz des Motors, beide Schutzfunktionen können zusammen verwendet werden.

Anzeige und Programmierung

Funktionen der Tasten und der Anzeige

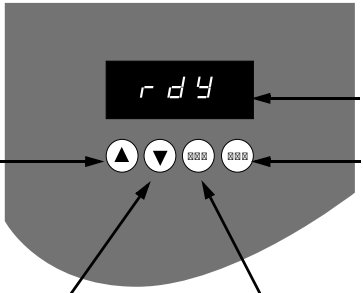

- 3-stellige 7-Segment Anzeige
- Wechselt in das vorhergehende Menü oder in den vorhergehenden Parameter oder erhöht den angezeigten Wert
- Wechselt in ein Menü oder in einen Parameter oder speichert den Parameter oder den angezeigten Wert
- Wechselt in das nächste Menü oder in den nächsten Parameter oder verringert den angezeigten Wert
- Verlässt ein Menü oder einen Parameter oder kehrt vom angezeigten Wert zum zuletzt gespeicherten Wert zurück

Über (▲) oder (▼) erfolgt keine Speicherung der Auswahl.

Speicherung der angezeigten Auswahl: (ENT)

Bei Speicherung blinkt die Anzeige

Anzeigemaßstab

Das Anzeigeprinzip der Zahlen ist je nach maximaler Skala des Parameters und seines Wertes unterschiedlich.

- Maximale Skala 9990:
  - Werte 0,1 bis 99,9 (Beispiele: 05.5 = 5,5 ; 55.0 = 55 ; 55.5 = 55,5)
  - Werte 100 bis 999 (Beispiel: 555 = 555)
  - Werte 1000 bis 9990 (Beispiel: 5.55 = 5550)
- Maximale Skala 99900:
  - Werte 1 bis 999 (Beispiele: 005 = 5 ; 055 = 55 ; 550 = 550)
  - Werte 1000 bis 9990 (Beispiel: 5.55 = 5550)
  - Werte 10000 bis 99900 (Beispiel: 55.5 = 55500)

Zugriff auf die Menüs

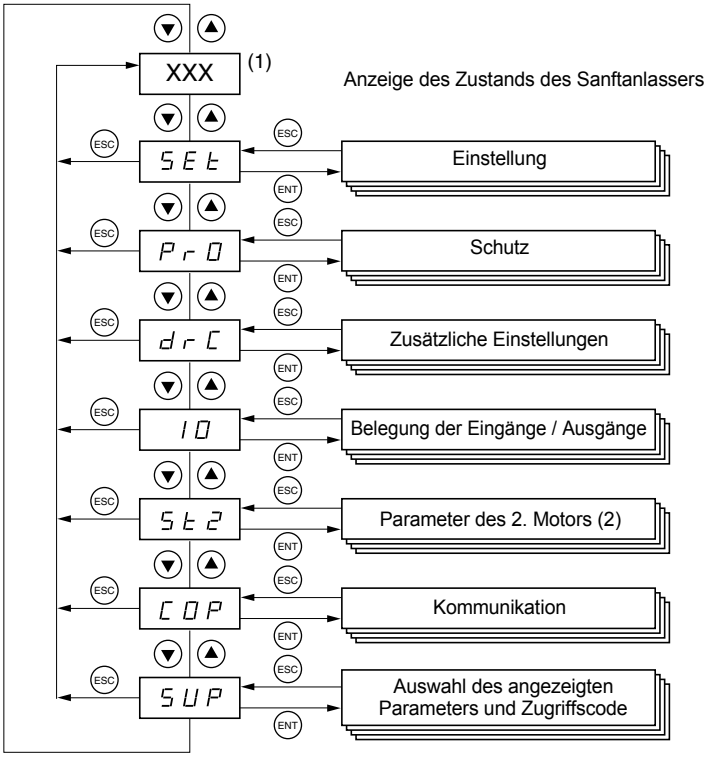

(1) Die Handhabung des angezeigten Wertes "XXX" wird in der nachfolgenden Tabelle angegeben.
(2) Das Menü St2 ist nur sichtbar, wenn die Funktion "Zweiter Parametersatz Motor" konfiguriert ist.

Zugang zu den Parametern

Speicherung der angezeigten Auswahl: (ENT)

Bei Speicherung blinkt die Anzeige

Beispiel:

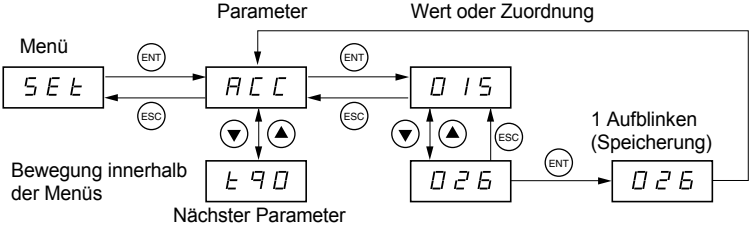

Anzeige des Zustands des Sanftanlassers

Der angezeigte Wert "XXX" unterliegt den nachfolgenden Regeln:

Angezeigter Wert	Zustand
Störungscode	Sanftanlasser in Störung
nLP rdY	Sanftanlasser ohne Fahrbefehl und: • Leistungsteil nicht mit Spannung versorgt • Leistungsteil mit Spannung versorgt
tbS	Anlaufverzögerung nicht verstrichen
HEA	Motorheizung aktiv
Vom Anwender ausgewählter Überwachungs-parameter (Menü SUP). In Werkseinstellung: Motorstrom	Sanftanlasser mit Fahrbefehl
brL	Sanftanlasser in Bremsbetrieb
Stb	Warten auf einen Steuerbefehl (RUN oder STOP) im Modus "Kaskadenbetrieb"

Wenn sich der Sanftanlasser in Strombegrenzung befindet, blinkt der angezeigte Wert "XXX".

Sobald sich der Sanftanlasser in Störung befindet, zeigt er einen Störungscode an. Die Veränderung von Parametern bleibt jedoch weiter möglich.

Option Bedienterminal

Das Bedienterminal **VW3 G48101** kann auf der Tür des Gehäuses oder des Schaltschranks montiert werden. Im Lieferumfang befindet sich eine Dichtung, mit deren Hilfe sich eine Dichtigkeit gemäß Schutzart IP65 herstellen lässt. Es besitzt ein 3 m langes Kabel mit Steckbuchsen, die Kommunikation erfolgt über den Anschluss RJ45 / Modbus des Sanftanlassers (**siehe mit dem Bedienterminal geliefertes Handbuch**). Es verfügt über dieselbe Anzeige und dieselben Programmiertaster wie der Altistart 48. Zusätzlich besitzt das Terminal einen Schalter zur Sperrung des Zugriffs auf die Menüs.

Vorderansicht:

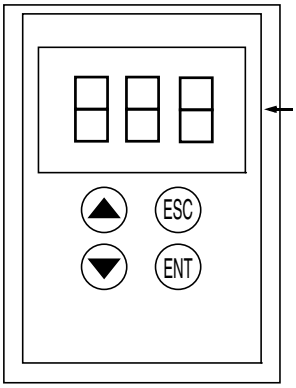

Rückansicht:

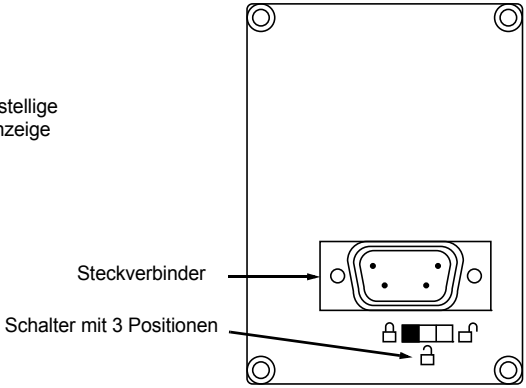

Handhabung des Schalters des Bedienterminals

Der Schalter mit 3 Positionen des Bedienterminals wird auf folgende Weise verwendet:

- Gesperrte Position : Nur auf die Überwachungsparameter kann zugegriffen werden. Die Veränderung der Auswahl des angezeigten Parameters ist nicht möglich, wenn der Sanftanlasser in Betrieb ist.
- Halbgesperrte Position : Zugriff eingeschränkt auf die Parameter der Menüs SEt, PrO und SUP.
- Entsperrte Position : Alle Parameter sind zugänglich.

Die eventuellen Einschränkungen der Anzeige aufgrund des Schalters am Bedienterminal bleiben nach einer Unterbrechung der Verbindung mit dem Bedienterminal sowie nach einem Ausschalten des Sanftanlassers direkt am Gerät weiterhin bestehen.

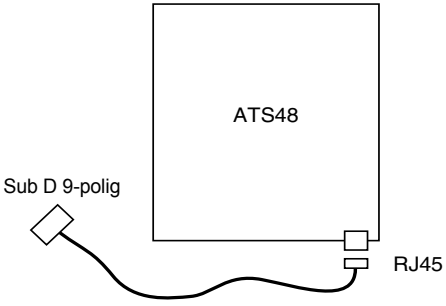

Menü "Einstellung" SEt

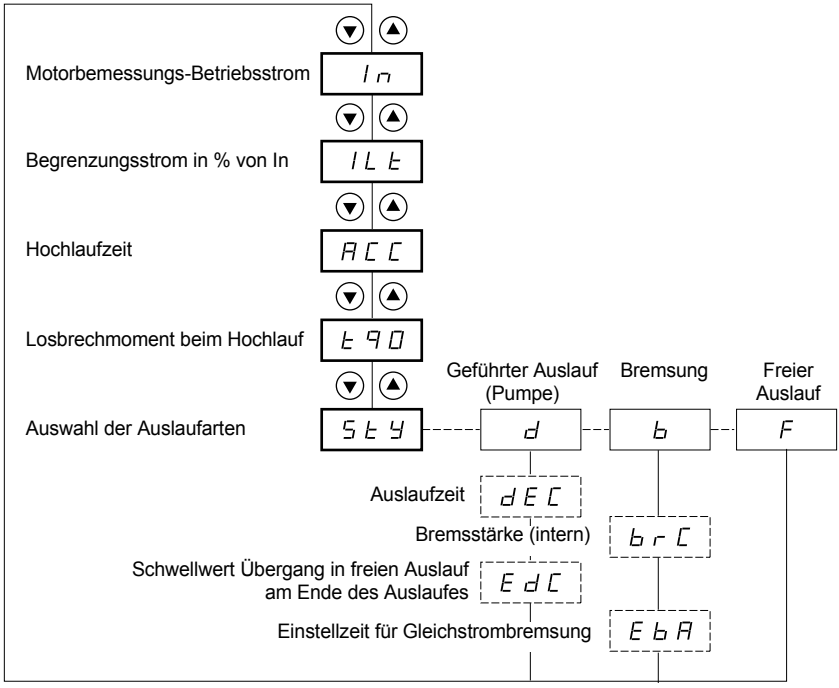

Parameter im Menü

Auswahl möglich

Je nach Auswahl erscheinender Parameter

Angaben zum Zugriff auf die Parameter 210.

Die Änderung der Einstellparameter ist nur im Stillstand möglich.

Code	Beschreibung	Einstell-bereich	Werks-einstellung
In	**Motorbemessungs-Betriebsstrom**	0,4 bis 1,3 ICL	(1)
	Den auf dem Leistungsschild angegebenen Nennstrom des Motors einstellen, selbst wenn der Sanftanlasser in der Dreieckwicklung des Motors geschaltet wird (dLt im Menü PrO). Überprüfen, dass dieser Strom zwischen 0,4 und 1,3 ICL liegt (ICL: Baugröße des Sanftanlassers).		
ILt	**Motorbegrenzungsstrom**	150 bis 700 % von In, begrenzt auf 500 % von ICL	400 % von In
	Der Motorbegrenzungsstrom ILt wird in % von In angegeben. Für die maximale Last sollte ILt auf einen Wert gesetzt werden, der den Motorstart ermöglicht. Wenn die Anwendung mehr als 500 % Icl erfordert, muss ein größerer Anlasser verwendet werden. Er ist begrenzt auf 500 % von ICL (Baugröße des Sanftanlassers, siehe die Tabellen “Zuordnung von Sanftanlasser und Motor”, Seite 178. Begrenzungsstrom = ILt x In. Beispiel 1: In = 22 A, ILt = 300 %, Begrenzungsstrom = 300 % x 22 A = 66 A Beispiel 2: ATS 48C21Q, wobei ICL = 210 A In = 195 A, ILt = 700 %, Begrenzungsstrom = 700 % x 195 = 1365, begrenzt auf 500 % x 210 = 1050 A		
ACC	**Hochlaufzeit**	1 bis 60 s	15 s
	In dieser Zeit steigt das Anlaufmoment zwischen 0 und dem Nennmoment M_N an, d. h. sie beschreibt die Steigung der Rampe bei zunehmendem Drehmoment. 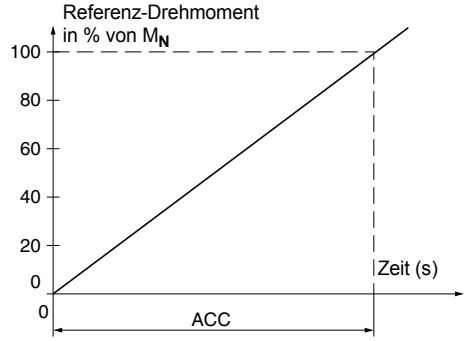 		

(1) Werkseinstellung von In entsprechend dem gebräuchlichen Wert eines 4-poligen Normmotors mit 400 V Netzspannung in Klasse 10 (bei ATS 48•••Q).
Werkseinstellung von In entsprechend dem gebräuchlichen Wert eines Normmotors gemäß NEC mit 460 V Netzspannung in Klasse 10 (bei ATS 48•••Y).

Code	Beschreibung	Einstell-bereich	Werks-einstellung
tq0	**Losbrechmoment beim Hochlauf**	0 bis 100 % von M_N	20 %
	Einstellung des Losbrechmomentes in den Anlaufphasen, einstellbar von 0 bis 100 % des Nennmomentes. Das anfängliche Startdrehmoment sollte so festgelegt werden, dass eine Motordrehung erfolgt, sobald der Befehl an den Motor ausgegeben wird. Wird das Drehmoment zu niedrig gewählt, dreht sich der Motor erst nach dem „Run“-Signal. 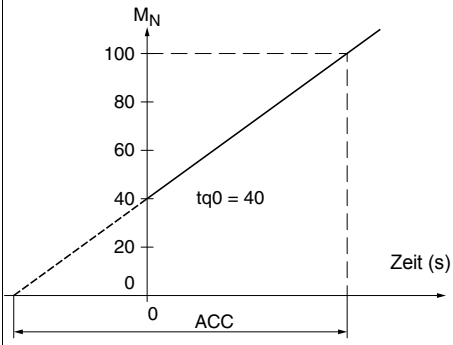 		
SEL	**Auswahl der Auslaufarten**	d-b-F	-F-
	Drei Auslaufarten sind möglich: **- d -** : Auslauf bis Halt über Drehmomentsteuerung. Der Sanftanlasser beaufschlagt ein Motordrehmoment um entlang der Rampe auszulaufen; es wird so ein heftiger Bremsruck verhindert. Dieses Auslauffunktion vermindert sehr effektiv z.B. Wasserschläge auf eine Pumpe. **- b -** : Anhalten mit dynamischer Bremsung; der Sanftanlasser erzeugt dabei ein Bremsmoment im Motor, um die Verzögerung bei großem Massenträgheitsmoment gewährleisten zu können. **- F -** : Anhalten im freien Auslauf, der Sanftanlasser legt kein Drehmoment am Motor an (Austrudeln). Wenn der Sanftanlasser in der Dreieckswicklung des Motors verdrahtet ist, ist nur die Auslaufart F zulässig.		

Code	Beschreibung	Einstell-bereich	Werks-einstellung
dEC	**Auslaufzeit**	1 bis 60 s	15 s
	Dieser Parameter ist nur zugänglich, wenn StY = -d-. Ermöglicht die Einstellung einer Zeit zwischen 1 und 60 s, um vom geschätzten Drehmoment zum Drehmoment Null zu gelangen (= geführter Auslauf mit abnehmendem Drehmoment beim Anhalten in Auslaufart -d-). Diese Funktion passt die Progressivität des Auslaufvorgangs an und vermeidet hydraulische Stöße bei Pumpenanwendungen durch eine Anpassung des Drehmomentsollwertes. 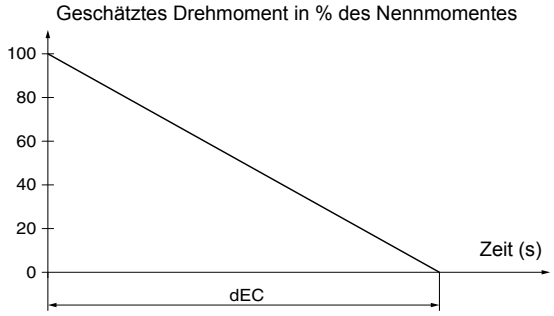 		
EdC	**Schwellwert Übergang in freien Auslauf am Ende des Auslaufphase**	0 bis 100 %	20 %
	Dieser Parameter ist nur zugänglich, wenn StY = -d- und wenn sich der Parameter CLP des Menüs Antrieb (drC) in Werkseinstellung befindet (On). Ermöglicht die Einstellung der Höhe des Enddrehmomentes zwischen 0 und 100 % des am Anfang des Auslaufvorgangs geschätzten Drehmomentes. Bei Pumpenanwendungen ist ein geführter Auslauf unterhalb des mit Edc eingestellten Wertes normalerweise nicht notwendig. Wenn das am Anfang des Auslaufvorgangs geschätzte Drehmoment unter 20 liegt, d. h. 20 % des Nennmomentes, wird der geführte Auslauf nicht aktiviert, und es erfolgt ein freier Auslauf. 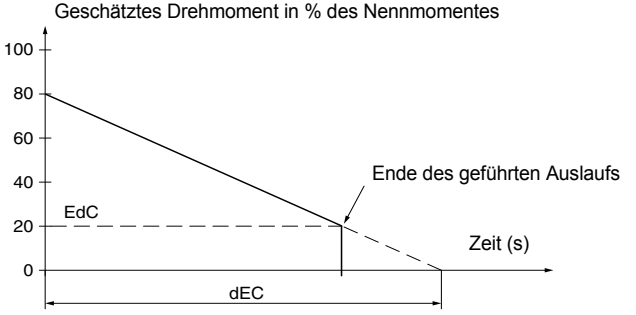 		

Code	Beschreibung	Einstell-bereich	Werks-einstellung
brC	**Stärke des internen Bremsmoments**	0 bis 100 %	50 %
	Dieser Parameter ist nur zugänglich, wenn StY = -b-. Bei einem Anhalten in Auslaufart -b- lässt sich mit diesem Parameter die Stärke der Bremsung regeln. Die Bremsung ist nur bis 20 % der Nenndrehzahl möglich; das endgültige Anhalten des Motors wird durch die Einstellung der Einspeisezeit von Gleichstrom im Motor (auf zwei Phasen) geregelt. Siehe nächster Parameter EbA. 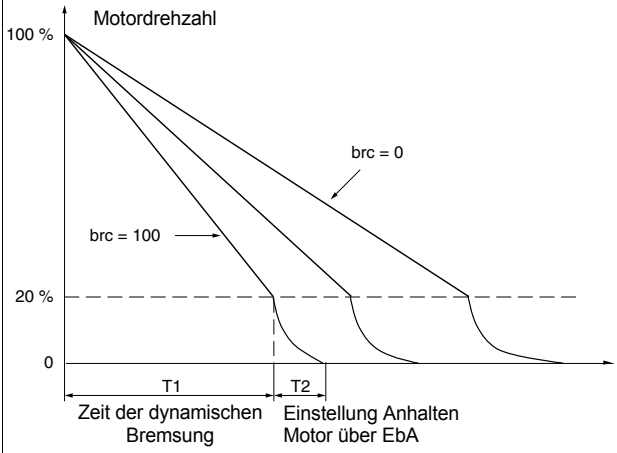 Einspeisezeit Gleichstrom: T2 = T1 x EbA Hinweis: Die Zeit T1 wird nicht über brC festgelegt. T1 ist die Zeit in Sekunden, die der Motor benötigt hat, um von 100 % der Nenndrehzahl zu 20 % zu gelangen (hängt somit von den Kenndaten des Motors und der Anwendung ab).		
EbA	**Einstellzeit für Gleichstrombremsung**	20 bis 100 %	20 %
	Dieser Parameter ist nur zugänglich, wenn StY = -b-. Bei einem Anhalten in Auslaufart -b- legt dieser Parameter die Einspeisezeit für Gleichstrom am Ende der Bremsung fest. Ermöglicht die Einstellung der Einspeisezeit für Gleichstrom. Einstellbar von 20 bis 100 % der dynamischen Bremszeit (T1). Beispiel: Dynamische Bremsung = 10 s (T1) Die Anhaltezeit kann zwischen 2 und 10 s (T2) schwanken EbA = 20 entspricht einer Einspeisezeit von 2 s EbA = 100 entspricht einer Einspeisezeit von 10 s Werkseinstellung: 20		

DEUTSCH

Menü "Schutz" PrO

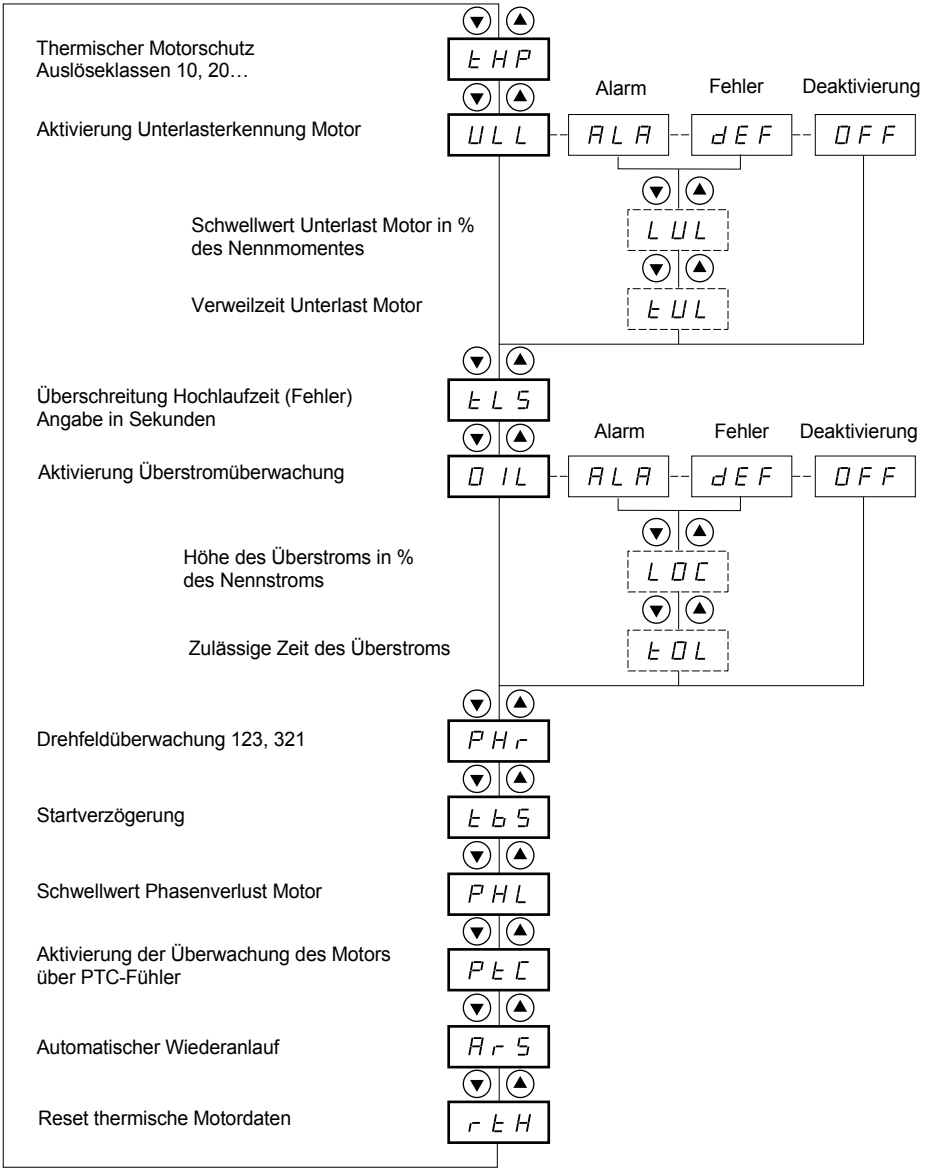

Parameter im Menü

Auswahl möglich

Je nach Auswahl erscheinender Parameter

Angaben zum Zugriff auf die Parameter 210.

Die Änderung der Schutzparameter ist nur im Stillstand möglich.

Code	Beschreibung	Einstell-bereich	Werks-einstellung
tHP	**Thermischer Motorschutz**		10
	Siehe “Thermische Schutzvorrichtungen”, Seite 205. 30 : Klasse 30 25 : Klasse 25 20 : Klasse 20 (Schweranlauf) 15 : Klasse 15 10 : Klasse 10 (Standardbetrieb) 10A : Klasse 10A 2 : Unterklasse 2 OFF : kein Schutz		
ULL	**Aktivierung Unterlasterkennung Motor**		OFF
	Bei einem Motordrehmoment unterhalb eines einstellbaren Schwellwertes LUL während einer Zeit, die länger als ein einstellbarer Wert tUL ist: - ALA: Aktivierung eines Alarms (internes Bit und konfigurierbarer Logikausgang) - dEF: Sperren des Sanftanlassers und Anzeige der Störung ULF - OFF: kein Schutz 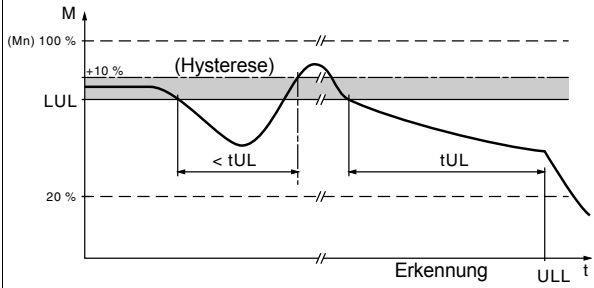 		
LUL	**Schwellwert Unterlast Motor**	20% bis 100% von M_N	60 %
	Dieser Parameter ist nicht verfügbar, wenn ULL = OFF. LUL ist einstellbar von 20% bis 100% des Motor-Nennmomentes.		
tUL	**Verweilzeit Unterlast Motor**	1 bis 60 s	60 s
	Dieser Parameter ist nicht verfügbar, wenn ULL = OFF. Die Verzögerung tUL ist aktiviert, sobald das Motormoment unterhalb des Schwellwertes LUL liegt. Sie wird auf Null zurückgesetzt, wenn das Drehmoment diesen Schwellwert LUL wieder um + 10% (Hysterese) überschreitet.		
tLS	Überschreitung Hochlaufzeit	10 bis 999 s oder OFF	OFF
	Wenn die Hochlaufzeit den Wert von tLS überschreitet, sperrt sich der Sanftanlasser und zeigt die Störung StF an. Die Bedingungen, die das Ende eines Anlaufvorgangs festlegen, sind: Netzspannung liegt am Motor an (minimaler Zündwinkel) und Motorstrom unter 1,3 In. - OFF: kein Schutz		

Die Konfiguration einer Alarmüberwachung (ALA) meldet das Vorliegen einer Störung, gewährleistet jedoch keinen direkten Schutz für die Anlage

DEUTSCH

Code	Beschreibung	Einstell-bereich	Werks-einstellung
OIL	**Aktivierung Überstromüberwachung**		OFF
	Funktion nur aktiv bei stabilem Betrieb. Wenn der Motorstrom einen einstellbaren Schwellwert LOC während einer Zeitdauer überschreitet, die länger als ein einstellbarer Wert tOL ist: - ALA: Aktivierung eines Alarms (internes Bit und konfigurierbarer Logikausgang) - dEF: Sperren des Sanftanlassers und Anzeige der Störung OLC - OFF: kein Schutz 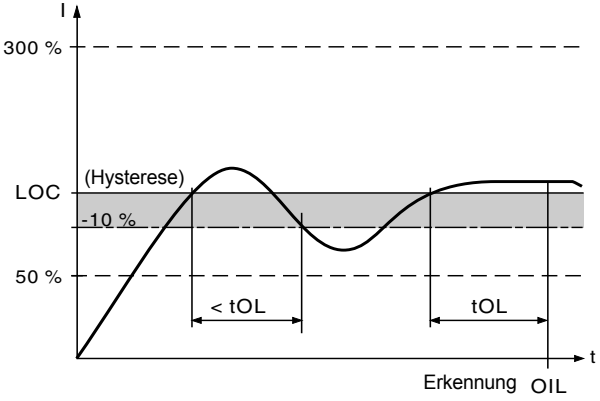		
LOC	**Schwellwert des Überstroms**	50% bis 300% von In	80 %
	Dieser Parameter ist nicht verfügbar, wenn OIL = OFF. LOC ist einstellbar von 50% bis 300% des Motor-Nennstroms.		
tOL	**Verweilzeit des Überstroms**	0,1 bis 60 s	10 s
	Dieser Parameter ist nicht verfügbar, wenn OIL = OFF. Die Verzögerung tOL ist aktiviert, sobald der Motorstrom oberhalb des Schwellwertes LOC liegt. Sie wird auf Null zurückgesetzt, wenn der Strom diesen Schwellwert LOC wieder um mindestens 10% (Hysterese) unterschreitet.		

Die werkseitige Konfiguration einer Alarmüberwachung (ALA) meldet das Vorliegen einer Störung, gewährleistet jedoch keinen direkten Schutz für die Anlage

Menü "Schutz" PrO

Code	Beschreibung	Einstell-bereich	Werks-einstellung
PHr	**Aktivierung der Drehfeldüberwachung**	321 oder 123 oder no	no
	Wenn sich die Phasen des Netzes nicht in der konfigurierten Reihenfolge befinden, sperrt sich der Sanftanlasser und zeigt die Störung PIF an. - 321 : umgekehrte Drehrichtung (L3 - L2 - L1) - 123 : direkte Drehrichtung (L1 - L2 - L3) - no : keine Überwachung		
tbS	**Startverzögerung**	0 bis 999 s	2 s
	Vermeidet zeitlich zu dicht liegende aufeinanderfolgende Anlaufvorgänge, die den Motor überhitzen können. Die Verzögerung wird ausgelöst, sobald der Motor in den freien Auslauf übergeht. Bei 2-Draht-Steuerung erfolgt der Wiederanlauf nach der Verzögerung, wenn der Eingang des Befehls RUN gehalten wurde. Bei 3-Draht-Steuerung erfolgt der Wiederanlauf nach der Verzögerung, wenn ein neuer Befehl RUN (ansteigende Flanke) erteilt wird. Der Sanftanlasser zeigt während der Verzögerung "tbS" an.		
PHL	**Schwellwert Motorphasenverlust**	5 bis 10 %	10 %
	Wenn der Motorstrom in einer Phase während 0,5 s oder in den drei Phasen während 0,2 s unter diesen Schwellwert abfällt, sperrt sich der Sanftanlasser und zeigt die Störung PHF an. Einstellbar zwischen 5 und 10 % der Baugröße des Sanftanlassers ICL.		
PtC	**Aktivierung der Überwachung des Motors über PTC-Fühler.**		OFF
	Die PTC-Fühler des Motors müssen an den entsprechenden Analogeingang angeschlossen werden. Dieser Schutz in unabhängig von dem berechneten thermischen Schutz (Parameter tHP), beide Schutzvorrichtungen können gemeinsam eingesetzt werden. - ALA: Aktivierung eines Alarms (internes Bit und belegbarer Logikausgang) - dEF: Sperren des Sanftanlassers und Anzeige der Störung OtF - OFF: kein Schutz		
Ars	**Automatischer Wiederanlauf**	On - OFF	OFF
	Nach Sperren infolge einer Störung, wenn die Störung beseitigt wurde und die übrigen Betriebsbedingungen ein Wiederanlaufen zulassen. Das Wiederanlaufen erfolgt über eine Reihe automatischer Versuche im Abstand von 60 s. Wenn der Sanftanlasser nach dem 6. Versuch nicht in Betrieb geht, bleibt er verriegelt und es muß ein manueller Reset erfolgen bzw. ein kurzes Wegschalten der Versorgungsspannung (siehe Kapitel "Störungen – Ursachen - Behebung" seite 241). Folgende Störmeldungen lassen diese Funktion zu: PHF, FrF, CLF, USF. Das Sicherheitsrelais des Sanftanlassers bleibt angezogen, wenn die Funktion aktiv ist. Der Fahrbefehl muss gehalten werden. Diese Funktion kann nur bei einer 2-Draht-Steuerung verwendet werden. - OFF: Funktion inaktiv - On: Funktion aktiv **Stellen Sie sicher, dass ein plötzlicher Wiederanlauf keine Gefahren für Mensch oder Maschine birgt**		
rtH	**Zurücksetzen des berechneten thermischen Motorzustands durch den Sanftanlasser**	no - YES	no
	- no: Funktion inaktiv - YES: Funktion aktiv		

Die werkseitige Konfiguration einer Alarmüberwachung (ALA) meldet das Vorliegen einer Störung, gewährleistet jedoch keinen direkten Schutz für die Anlage

DEUTSCH

Menü "Zusätzliche Einstellungen" drC

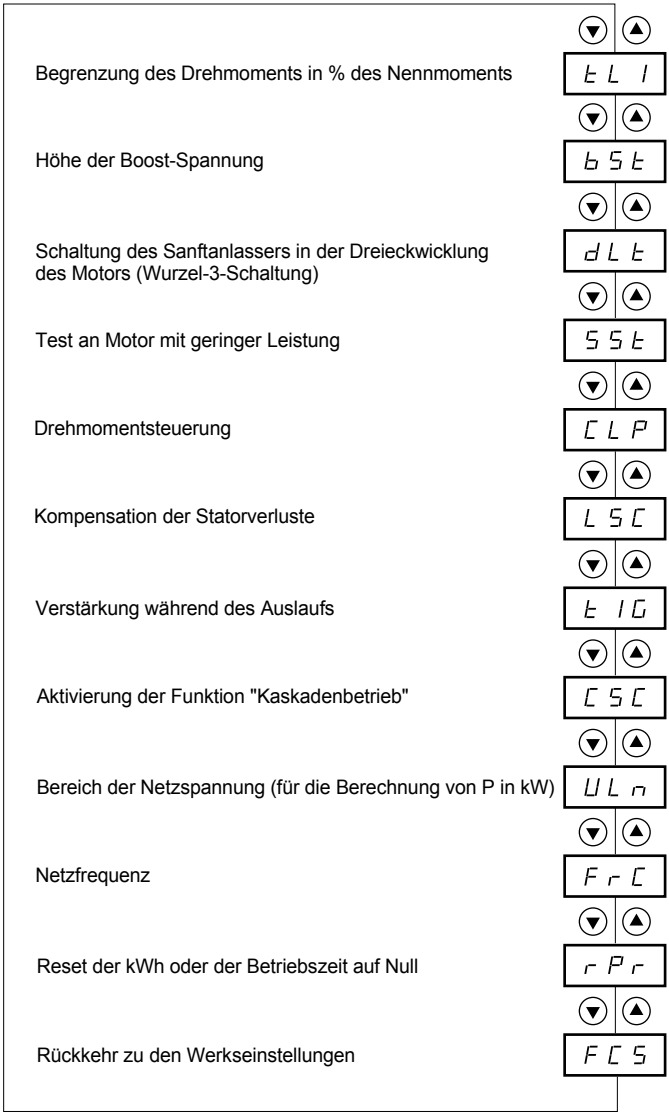

Parameter im Menü

Menü "Zusätzliche Einstellungen" drC

Die Änderung der Parameter im Menü „Zusätzliche Einstellungen“ ist nur im Stillstand möglich.

Code	Beschreibung	Einstell-bereich	Werks-einstellung
tLI	**Drehmomentbegrenzung**	10 bis 200 % oder OFF	OFF
	Ermöglicht die Begrenzung des Drehmomentsollwerts, um Übergänge in übersynchronen Betrieb bei Anwendungen mit hohem Massenträgheitsmoment zu vermeiden. Ein Hochlauf mit konstantem Drehmoment ist möglich, wenn tqO = tLI. - OFF: keine Begrenzung - 10 bis 200: Einstellung der Begrenzung in % des Nennmoments		
bSt	**Höhe der Boost-Spannung**	50 bis 100 % oder OFF	OFF
	Ermöglicht bei Vorliegen eines Fahrbefehls während 100 ms das Anlegen einer einstellbaren Spannung. Am Ende dieser Dauer nimmt der Sanftanlasser wieder eine standardmäßige Hochlauframpe ausgehend von dem eingestellten Wert des Ausgangsdrehmoments (tq0) an. Mit dieser Funktion kann ein eventuelles "Losbrechmoment" (Haftreibung im Stillstand oder einer mechanischen Schwergängigkeit) überwunden werden. - OFF: Funktion inaktiv - 50 bis 100: Einstellung in % der Nennspannung des Motors 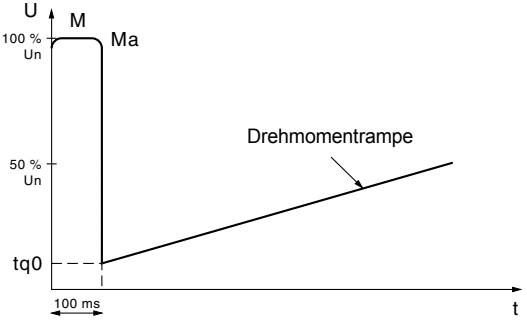 **Bei Überdimensionierung des Sanftanlassers (I Motor > I ATS48), kann ein zu hoher Wert des Parameters bSt eine Verriegelung des Sanftanlassers mit OCF auslösen**		
dLt	**Schaltung des Sanftanlassers in der Dreieckwicklung des Motors** (Wurzel-3-Schaltung)	on - OFF	OFF
	Diese Schaltung ermöglicht bezogen auf die Leistung eine 1,7fache Überdimensionierung des Sanftanlassers, Bremsung oder Auslauf sind jedoch nicht möglich. - OFF: normale Schaltung in der Zuleitung - On: Schaltung in der Dreieckwicklung des Motors Der Nennstrom In des Motors bleibt der auf dem Leistungsschild des Motors angegebene Strom, und die Anzeige des Stroms entspricht dem Netzstrom des Versorgungsnetzes. Der Wert des Nennstroms In (Menü SEt) bleibt der auf dem Leistungsschild des Motors gestempelte Wert für die Dreieckschaltung, da der Sanftanlasser selbst die Umrechnung für die Steuerung des Stroms in den Wicklungen vornimmt. Dieser Parameter ist nur bei den Sanftanlassern ATS 48•••Q zugänglich oder ATS 48••• YS 316. **• Mit dieser Funktion ist dynamisches Bremsen nicht möglich** **• Keine Funktion "Kaskadenbetrieb"** **• Keine Motorheizung** **• Das Verdrahtungsdiagramm auf Seite 197 muss beachtet werden**		

DEUTSCH

Menü "Zusätzliche Einstellungen" drC

Code	Beschreibung	Einstell-bereich	Werks-einstellung
SSt	**Test an Motor mit geringer Leistung**	On-OFF	OFF
	Zur Überprüfung des Sanftanlassers in einer Test- oder Wartungsumgebung an einem Motor mit einer Leistung, die deutlich unter der Baugröße des Sanftanlassers liegt (insbesondere bei Sanftanlassern mit hoher Leistung). Der Parameter "Drehmomentsteuerung" CLP ist automatisch deaktiviert. - OFF: Funktion inaktiv - On: Funktion aktiv • **SSt kehrt in den Zustand OFF zurück, sobald die Steuerspannung unterbrochen ist. Beim darauffolgenden Wiedereinschalten nehmen die Störung PHF und der Parameter CLP wieder ihre Ausgangskonfiguration ein.** • **SST dient ausschließlich der Wartung und Prüfung des Anlassers.**		
CLP	**Drehmomentsteuerung** (Steuerungsart).	On-OFF	On
	- OFF: Funktion inaktiv - On: Funktion aktiv In der Position On erfolgen Hochlauf und Auslauf über eine Drehmomentrampe. In der Position OFF erfolgen Hochlauf und Auslauf über eine Spannungsänderung. Bei Anwendungen mit am selben Sanftanlasser parallelgeschalteten Motoren oder einem Motor mit sehr geringer Leistung bezogen auf die Baugröße des Sanftanlassers (Verwendung eines unterdimensionierten Motors zum Testen des Sanftanlassers) wird die Spannungssteuerung (CLP = OFF) empfohlen.		
LSC	**Kompensation der Statorverluste**	0 bis 90 %	50 %
	Parameter aktiv während der Hochlaufphasen (und der Auslaufphasen bei StY = -d-). Bei Drehmomentschwankungen muss dieser Parameter solange verringert werden, bis sich ein korrekter Betrieb einstellt. Schwingungserscheinungen treten im wesentlichen bei Schaltung des Sanftanlassers in der Dreieckwicklung des Motors und bei Motoren mit starkem Schlupf auf.		
tIG	**Verstärkung während des Auslaufs** (bei Drehmomentsteuerung).	10 bis 50 %	40 %
	Dieser Parameter ist nur zugänglich, wenn CLP = On und wenn der Parameter StY (Menü Einstellung SEt) = -d-. Ermöglicht die Eliminierung von Instabilitäten während des Auslaufs. Je nach den auftretenden Schwingungen auf einen größeren oder kleineren Wert einstellen.		
CSC	**Aktivierung der Funktion "Kaskadenbetrieb"**	On-OFF	OFF
	Siehe Steuerungsdiagramm auf Seite 204. - On: Funktion aktiv - OFF: Funktion inaktiv Dieser Parameter ist nur dann zugänglich, wenn das Relais R1 zuvor mit der Funktion "Netzschützansteuerung" belegt wurde und wenn die Funktionen "Anhalten im freien Auslauf", "Schaltung des Sanftanlassers in der Dreieckwicklung des Motors" und "Motorheizung" nicht konfiguriert sind. Einem Eingang LI = LIC zuordnen. Maximal 255 Motoren.		
ULn	**Bereich der Netzspannung**	170 bis 460 V (ATS48••Q) 180 bis 790 V (ATS48••Y)	400 V (ATS48••Q) 460 V (ATS48••Y)
	Dieser Parameter dient der Berechnung der angezeigten Leistung (Parameter LPr und LAP im Menü SUP). Die Genauigkeit der Anzeige hängt von der korrekten Einstellung dieses Parameters ab.		

Menü "Zusätzliche Einstellungen" drC

Code	Beschreibung	Einstell-bereich	Werks-einstellung
FrC	**Netzfrequenz**	50-60-AUt	AUt
	- 50 : 50 Hz (Überwachungstoleranz der Störung "Netzfrequenz außerhalb Toleranz" FrF = ± 20 %). - 60 : 60 Hz (Überwachungstoleranz der Störung "Netzfrequenz außerhalb Toleranz" FrF = ± 20 %). - AUt : Automatische Erkennung der Netzfrequenz durch den Sanftanlasser mit einer Überwachungstoleranz der Störung "Netzfrequenz außerhalb Toleranz" FrF = ± 5 % Die Wahlmöglichkeiten 50 und 60 werden bei Spannungsversorgung über einen Generator aufgrund der auftretenden großen Toleranzen empfohlen.		
rPr	**Reset der kWh oder der Betriebszeit auf Null**	no-APH-trE	no
	- no: Funktion inaktiv - APH: Rücksetzen der kWh auf Null (1) - trE: Rücksetzen der Betriebszeit auf Null Eine Bestätigung des Reset-Befehls muß über ENT erfolgen. Die Ausführung von APH und trE erfolgt unmittelbar, der Parameter stellt sich anschließend automatisch auf no zurück.		
FCS	**Rückkehr zu den Werkseinstellungen**	no-YES	no
	Reinitialisieren aller Parameter auf ihren Ausgangswert "Werkseinstellung". - no: Funktion inaktiv - YES: Funktion aktiv, erfordert ein längeres Betätigen (etwa 2 s) zur Berücksichtigung, anschließend blinkt die Anzeige zur Bestätigung. Die Rückkehr des Parameters FCS auf den Wert no erfolgt automatisch bei Betätigen von ESC. **Dieser Parameter lässt sich nicht über das Bedienterminal verändern.**		

(1) Die Information "verbrauchte kWh" ist nur mit der Software PowerSuite oder online mit Modbus (Adresse W4074) sichtbar.

Menü "Belegung der Eingänge / Ausgänge" IO

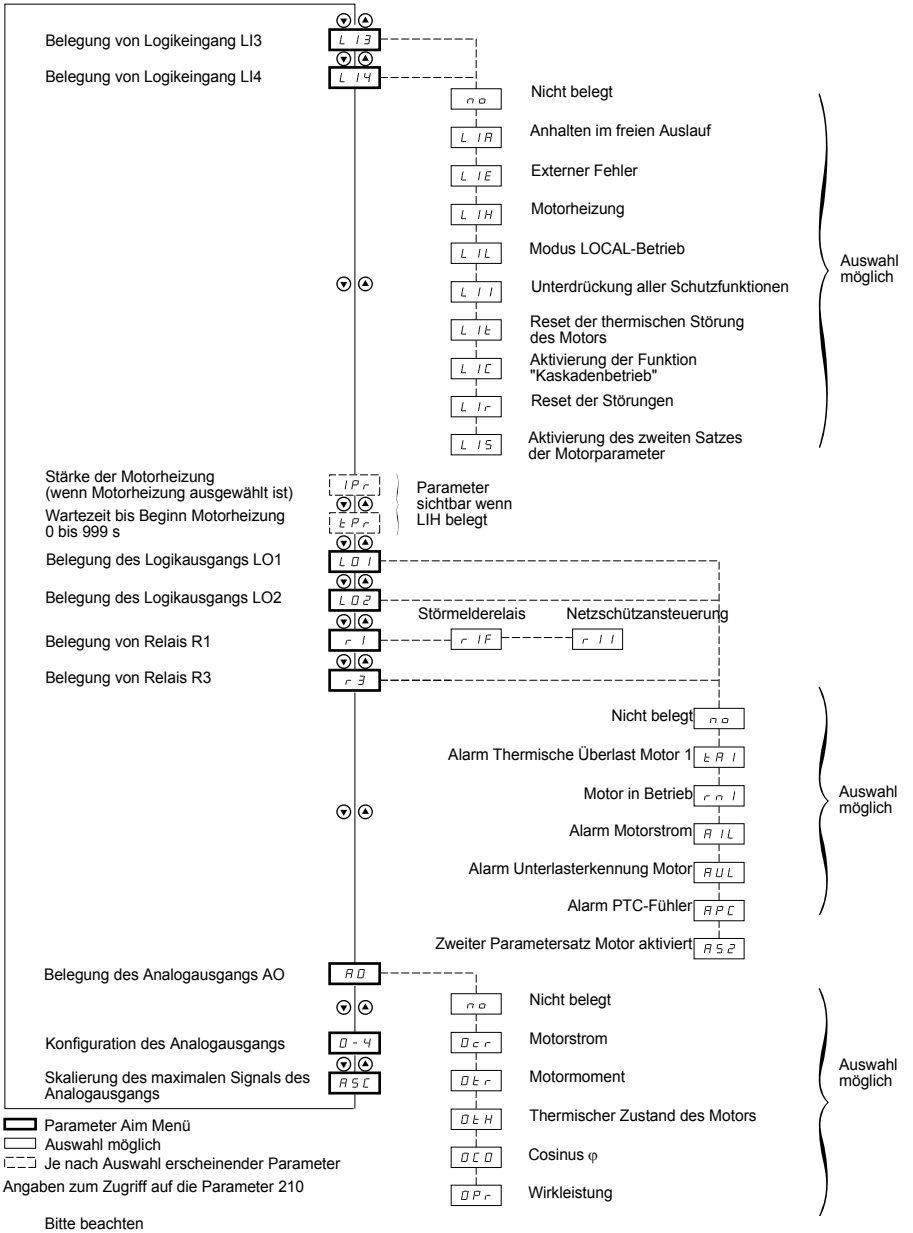

Angaben zum Zugriff auf die Parameter 210

Bitte beachten

Logikeingang RUN : nicht belegbar
Logikeingang STOP : nicht belegbar
Steuerung des Überbrückungsschützes des Sanftanlassers : nicht belegbar (R2)

Menü "Belegung der Eingänge / Ausgänge" IO

Die Änderung der Parameter für die Belegung der Eingänge / Ausgänge ist nur im Stillstand möglich.

Code	Beschreibung	Einstell-bereich	Werks-einstellung
L I3 L I4	**Logikeingänge**		LIA LIL

Die gewählte Funktion ist aktiv, wenn der Eingang unter Spannung ist.
- no: nicht belegt.
- LIA: Anhalten im freien Auslauf, sobald ein STOP-Befehl erteilt wird. Diese Auswahl erscheint nicht, wenn der Parameter CSC im Menü drC auf "On" eingestellt ist. Erzwingt die Konfiguration des Anhaltens im freien Auslauf, aber steuert nicht das Anhalten.
- LIE: externer Fehler. Ermöglicht dem Sanftanlasser die Berücksichtigung einer anwenderseitigen externen Störung (Niveau, Druck,...). Der Motor hält im freien Auslauf an, und der Sanftanlasser zeigt EtF an.
- LIH: (1) Motorheizung. Diese Auswahl erscheint nicht, wenn der Parameter CSC im Menü drC auf "On" eingestellt ist. Ermöglicht den Schutz des Motors vor Frost oder Temperaturschwankungen, die zur Kondenswasserbildung führen können. Im Stillstand des Motors fließt ein einstellbarer Strom IPr nach einer einstellbaren Verzögerung tPr durch den Motor, wenn der Eingang aktiviert ist. Dieser Strom erwärmt den Motor, ohne dass der Motor sich dreht. IPr und tbr müssen eingestellt werden (siehe unten).

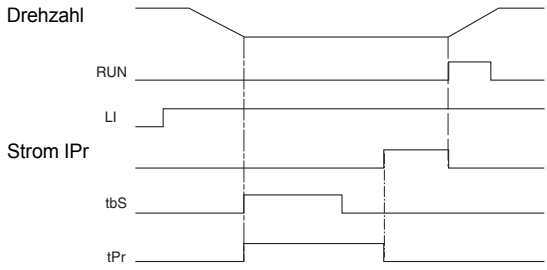

  Die Motorheizung wird eingeschaltet, wenn der Eingang unter Spannung und der Motor im Stillstand ist, nachdem die Verzögerungen tPr und tbS (Menü PrO) verstrichen sind. Die Motorheizung endet, wenn der Eingang deaktiviert wird oder wenn ein Fahrbefehl erteilt wird bzw. wenn der Eingang STOP betätigt wird.
- LIL: Modus LOCAL-Betrieb. Bei Verwendung der seriellen Schnittstelle ermöglicht dies ein Umschalten vom REMOTE-Betrieb (Steuerung über die serielle Schnittstelle) in den LOCAL-Betrieb (Steuerung über die Klemmenleiste).
- LII: (1) Unterdrückung aller Schutzfunktionen. Achtung, diese Betriebsart führt zum Erlöschen der Garantie des Sanftanlassers. Ermöglicht einen erzwungenen Betrieb des Sanftanlassers in Notfällen (z. B. Absaugen von Rauchgasen).
- LIt: Reset der thermischen Störung des Motors.
- LIC: Aktivierung der Funktion "Kaskadenbetrieb". In diesem Fall wird der thermische Schutz des Motors unterdrückt, und das Relais R1 muss als Netzschützansteuerung konfiguriert werden. Ermöglicht Hochlauf und Auslauf mehrerer identischer Motoren nacheinander über einen einzigen Sanftanlasser (siehe Schaltungsempfehlung).
- LIr: Reset der Störungen, die ein Wiedereinschalten zulassen.
- LIS: Aktivierung des zweiten Parametersatzes des Motors. Ermöglicht Hochlauf und Auslauf von zwei unterschiedlichen Motoren nacheinander oder eines Motors mit zwei unterschiedlichen Konfigurationen über nur einen Sanftanlasser.

(1) Diese Belegung erfordert ein Betätigen von ENT für die Dauer von 10 s, damit eine Berücksichtigung erfolgt. (Bestätigung durch Blinken der Anzeige).
Dieser Parameter lässt sich nicht über das Bedienterminal verändern.

DEUTSCH

Menü "Belegung der Eingänge / Ausgänge" IO

Code	Beschreibung	Einstell-bereich	Werks-einstellung
IPr	**Stärke der Motorheizung**	0 bis 100 %	0 %
	Dieser Parameter erscheint nach der Belegung von LI3 oder LI4 mit der Funktion LIH: Motorheizung. Er ermöglicht die Einstellung des Stroms, der während der Motorheizung fließt. Benutzen Sie ein Amperemeter (Effektivwert) um den Motorstrom zu setzen. Der Parameter In hat keinen Einfluss auf den Strom IPr. **VORSICHT** **GEFAHR FÜR MOTORSCHÄDEN** Wenn die Netzfrequenz schwankt, ist es notwendig ein externes Gerät zur Überwachung der Frequenz zu benutzten und die Funktion Stillstandsheizung zu deaktivieren. **Zuwiderhandlungen können in Materialschäden resultieren.**		
tPr	**Wartezeit bis Beginn Motorheizung**	0 bis 999 mn	5 mn
	Dieser Parameter erscheint nach der Belegung von LI3 oder LI4 mit der Funktion LIH: Motorheizung. Die Motorheizung wird eingeschaltet, wenn der Eingang unter Spannung ist, nachdem die Verzögerungen tPr und tbS (Menü PrO) verstrichen sind.		
LO1 LO2	**Logikausgänge**		tAI ,rnI
	- no: nicht belegt. - tAI: Alarm Thermische Überlast Motor. Siehe Seite 205. - rnI: Motor in Betrieb (informiert, dass potentiell Strom im Motor fließt). - AIL: Alarm Motorstrom (Schwellwert OIL und Zeit tOL im Menü PrO überschritten). Siehe "Funktion nur aktiv bei stabilem Betrieb.", Seite 220. - AUL: Alarm Unterlast Motor (Schwellwert LUL und Zeit tUL im Menü PrO überschritten). Siehe Seite 219. - APC: Alarm PTC-Fühler Motor. Siehe "Aktivierung der Überwachung des Motors über PTC-Fühler.", Seite 221. - AS2: Zweiter Parametersatz Motor aktiviert. Siehe LIS "Logikeingänge", Seite 227.		
r1	**Relais R1**		rIF
	- r1F: Störmelderelais. Das Relais R1 wird aktiviert, wenn der Sanftanlasser unter Spannung ist (zumindest Steuerteil CL1/CL2). Das Relais R1 wird deaktiviert, wenn eine Störung auftritt, der Motor geht dann in den freien Auslauf über. Siehe Sonderfall, wenn die Funktion "Automatischer Wiederanlauf" aktiviert ist, und Störungen - Ursachen - Behebung.Seite 241 bis 246 - r1I: Netzschützansteuerung. Das Relais R1 dient der Steuerung des Netzschützes ausgehend von den Steuerbefehlen RUN und STOP und der Signalisierung einer Störung. Das Relais R1 wird bei einem Fahrbefehl RUN (oder einem Befehl für die Motorheizung) aktiviert. Es wird am Ende der Bremsung und des Auslaufs oder beim Übergang in den freien Auslauf nach einem Haltebefehl STOP deaktiviert. Bei Auftreten einer Störung wird es ebenfalls deaktiviert, der Motor geht dann in den freien Auslauf über.		
r3	**Relais R3**		rnI
	- no: nicht belegt - tAI: Alarm Thermische Überlast Motor. Siehe Seite 205. - rnI: Motor in Betrieb (informiert, dass potentiell Strom im Motor fließt). - AIL: Alarm Motorstrom (Schwellwert OIL und Zeit tOL im Menü PrO überschritten). Siehe "Funktion nur aktiv bei stabilem Betrieb.", Seite 220. - AUL: Alarm Unterlast Motor (Schwellwert LUL und Zeit tUL im Menü PrO überschritten). Siehe Seite 219. - APC: Alarm PTC-Fühler Motor. Siehe "Aktivierung der Überwachung des Motors über PTC-Fühler.", Seite 221. - AS2: Zweiter Parametersatz Motor aktiviert. Siehe LIS "Logikeingänge", Seite 227.		

Relais R2 "Ende des Hochlaufvorgangs" (nicht belegbar)

Das Relais R2 "Ende des Hochlaufvorgangs" wird eingeschaltet, wenn der Sanftanlasser unter Spannung ist, keine Störung vorliegt, und das Hochlaufen des Motors beendet ist. Bei einer Halteanforderung und bei einer Störung wird es ausgeschaltet. Es besteht aus einem Schließer (NO).

Dieses Relais kann eingesetzt werden, um die Überbrückung des ATS 48 am Ende des Hochlaufs zu ermöglichen.

Analogausgang

Code	Beschreibung	Einstell-bereich	Werks-einstellung
AO	**Analogausgang**		OCr
	- no: nicht belegt - OCr: Motorstrom - Otr: Motordrehmoment - OtH: Thermischer Zustand des Motors - OCO: Cosinus φ - OPr: Wirkleistung		
O4	**Konfiguration des vom Ausgang AO gelieferten Signaltyps**	020 - 420	020
	- 020 : Signal 0 - 20 mA - 420 : Signal 4 - 20 mA		
ASC	**Skalierung des maximalen Signals des Analogausgangs**	50 bis 500 %	200
	In Prozent des Nennwerts des konfigurierten Parameters oder von 1 für den Cosinus φ.		

Menü "Parameter 2. Motor" St2

Die Parameter des ersten oder zweiten Motors werden über digitalen Eingang ausgewählt (LIS).
Sie werden aktiviert:

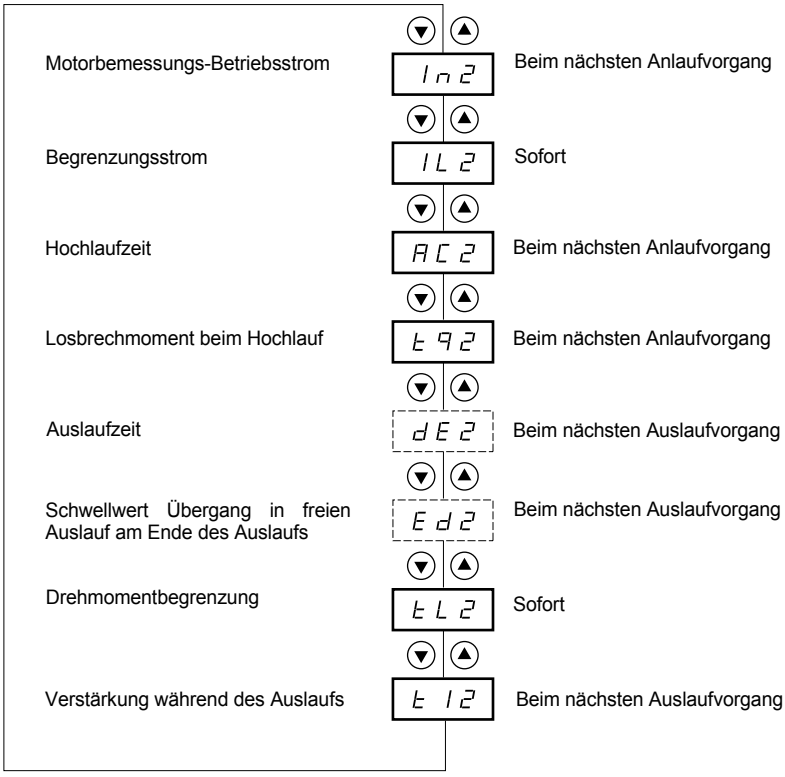

Parameter im Menü

Aktualisierung der Parameter je nach Auswahl von StY im Menü SEt

DEUTSCH

Menü "Parameter 2. Motor" St2

Dieses Menü ist nur sichtbar, wenn ein Logikeingang mit der Funktion "Aktivierung des zweiten Parametersatzes für den Motor" (LIS) im Menü "Belegung der Eingänge / Ausgänge I O" belegt ist.

Code	Beschreibung	Einstell-bereich	Werks-einstellung
In2	**Motorbemessungs-Betriebsstrom**	0,4 bis 1,3 ICL	(1)
	Den auf dem Leistungsschild angegebenen Nennstrom des Motors einstellen, selbst wenn der Sanftanlasser in der Dreieckwicklung des Motors geschaltet wird (PrO). Überprüfen, dass dieser Strom zwischen 0,4 und 1,3 ICL liegt (ICL: Baugröße des Sanftanlassers). Siehe "Zuordnung von Sanftanlasser und Motor", Seite 178.		
IL2	**Motorbegrenzungsstrom**	150 bis 700 % von In, begrenzt auf 500 % von ICL	400 % von In
	Der Motorbegrenzungsstrom IL2 wird in % von In2 angegeben. Er ist begrenzt auf 500 % von ICL (Baugröße des Sanftanlassers, siehe die Tabellen "Zuordnung von Sanftanlasser und Motor", Seite 178). Begrenzungsstrom = IL2 x In2 Beispiel 1: In2 = 21 A, IL2 = 300 %, Begrenzungsstrom = 300 % x 22 A = 66 A Beispiel 2: ATS 48C21Q, wobei ICL = 210 A In2 = 195 A, IL2 = 700 %, Begrenzungsstrom = 700 % x 195 = 1365, begrenzt auf 500 % x 210 = 1050 A		
AC2	**Hochlaufzeit**	1 bis 60 s	15 s
	In dieser Zeit steigt das Anlaufmoment zwischen 0 und dem Nennmoment M_N an, d. h. sie beschreibt die Steigung der Rampe bei zunehmendem Drehmoment. 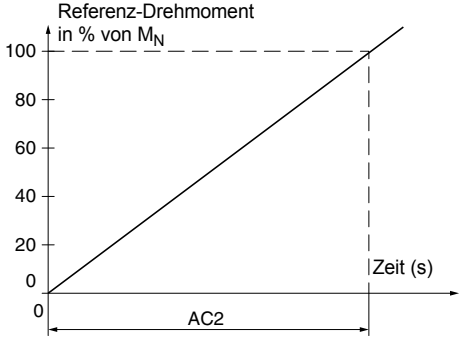 		

(1) Werkseinstellung von In2 entsprechend dem gebräuchlichen Wert eines 4-poligen Normmotors mit 400 V Netzspannung in Klasse 10 (bei ATS 48•••Q).
Werkseinstellung von In2 entsprechend dem gebräuchlichen Wert eines Normmotors gemäß NEC mit 460 V Netzspannung in Klasse 10 (bei ATS 48•••Y).

Code	Beschreibung	Einstell-bereich	Werks-einstellung
tq2	**Losbrechmoment beim Hochlauf**	0 bis 100 % von M_N	20 %
	Einstellung des Losbrechmomentes in den Anlaufphasen, einstellbar von 0 bis 100 % des Nennmomentes. 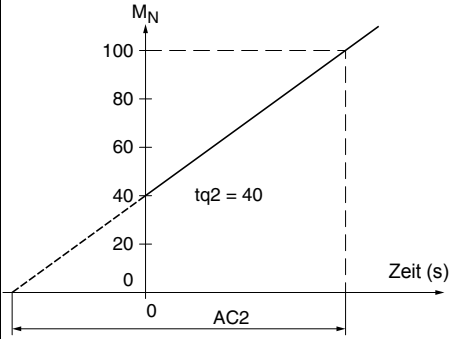 		
dE2	**Auslaufzeit**	1 bis 60 s	15 s
	Dieser Parameter ist nur zugänglich, wenn StY = -d-. Ermöglicht die Einstellung einer Zeit zwischen 1 und 60 s, um vom geschätzten Drehmoment zum Drehmoment Null zu gelangen (= geführter Auslauf mit abnehmendem Drehmoment beim Anhalten in Auslaufart -d-). Diese Funktion passt die Progressivität des Auslaufvorgangs an und vermeidet hydraulische Stöße bei Pumpenanwendungen durch eine Anpassung des Drehmomentsollwertes. 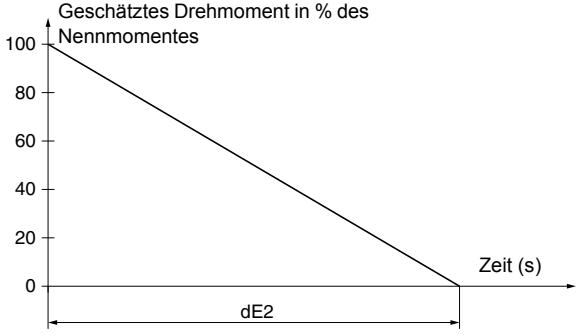 		

Code	Beschreibung	Einstell-bereich	Werks-einstellung
Ed2	**Schwellwert Übergang in freien Auslauf am Ende der Auslaufphase**	0 bis 100 %	20 %
	Dieser Parameter ist nur zugänglich, wenn StY = -d- und wenn sich der Parameter CLP des Menüs Antrieb (drC) in Werkseinstellung befindet (On). Ermöglicht die Einstellung der Höhe des Endmomentes zwischen 0 und 100 % des am Anfang des Auslaufvorgangs geschätzten Drehmomentes. Bei Pumpenanwendungen ist ein geführter Auslauf unterhalb des mit Ed2 eingestellen Wertes normalerweise nicht notwendig. Wenn das am Anfang des Auslaufvorgangs geschätzte Drehmoment unter 20 liegt, d. h. 20 % des Nennmomentes, wird der geführte Auslauf nicht aktiviert, und es erfolgt ein freier Auslauf. 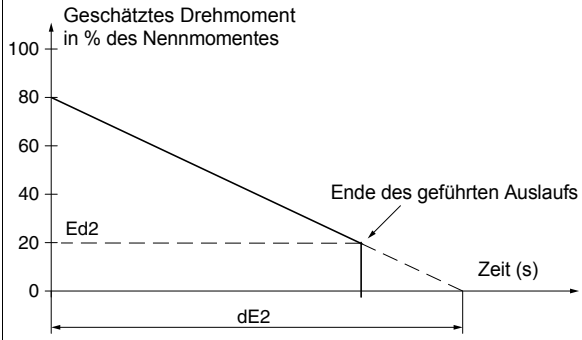 		
tL2	**Drehmomentbegrenzung**	10 bis 200 % oder OFF	OFF
	Ermöglicht die Begrenzung des Drehmomentsollwerts, um Übergänge in übersynchronen Betrieb bei Anwendungen mit hohem Massenträgheitsmoment zu vermeiden. Ein Hochlauf mit konstantem Drehmoment ist möglich, wenn tq2 = tL2. - OFF: keine Begrenzung - 10 bis 200: Einstellung der Begrenzung in % des Nennmoments		
t12	**Verstärkung während des Auslaufs** (bei Drehmomentsteuerung)	10 bis 50 %	40 %
	Dieser Parameter ist nur zugänglich, wenn CLP = On und wenn der Parameter StY (Menü Einstellung SEt) = -d-. Ermöglicht die Eliminierung von Instabilitäten während des Auslaufs. Je nach den auftretenden Schwingungen auf einen größeren oder kleineren Wert einstellen.		

Menü "Kommunikation" COP

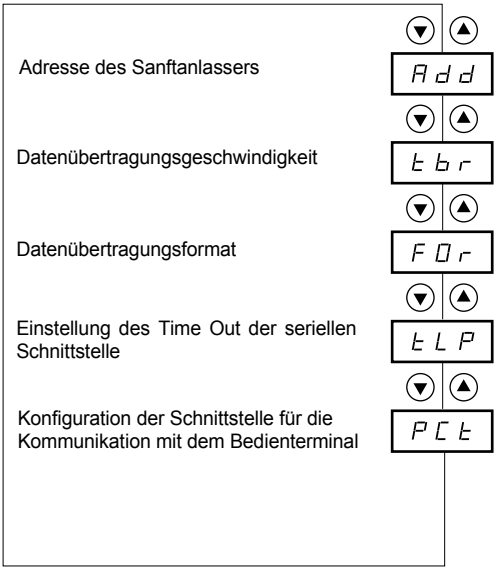

Parameter im Menü

Menü "Kommunikation" COP

Die Änderung der Parameter des Menüs „Kommunikation“ ist nur im Stillstand möglich.
Intern wird das Modbus-Protokoll verwendet.

Code	Beschreibung	Einstell-bereich	Werks-einstellung
Add	**Adresse des Sanftanlassers** über die serielle Schnittstelle RS485	0 bis 31	0
tbr	**Datenübertragungsrate** in Kilobit pro Sekunde	4,8 - 9,6 - 19,2	19,2
FOr	**Datenübertragungsformat** 8o1 : 8 Datenbits, ungerade Parität, 1 Stoppbit 8E1 : 8 Datenbits, gerade Parität, 1 Stoppbit 8n1 : 8 Datenbits, keine Parität, 1 Stoppbit 8n2 : 8 Datenbits, keine Parität, 2 Stoppbits		8n1
tLP	**Einstellung des Time Out der seriellen Schnittstelle** (1)	0,1 bis 60 s	5 s
PCt	**Konfiguration der seriellen Schnittstelle für die Kommunikation mit dem Bedienterminal** On: Funktion aktiv. Konfiguriert den Sanftanlasser vorübergehend (tbr und FOr) für die Kommunikation mit dem Bedienterminal. Konfiguriert den Anlasser (tbr und For) temporär auf die Kommunikation mit dem externen Terminal, kommt zum Einsatz wenn tbr und F0r nicht in Werkseinstellung ist. OFF: Funktion temporäre Konfiguration inaktiv **PCt kehrt in den Zustand OFF zurück, sobald die Steuerspannung unterbrochen ist. Beim darauffolgenden Wiedereinschalten nehmen die Parameter tbr und FOr wieder ihre Ausgangskonfiguration ein**		OFF

(1) Überprüfen Sie, dass die eingestellte Zeit mit der Betriebssicherheit der Maschine vereinbar ist

Menü "Angezeigter Parameter" SUP

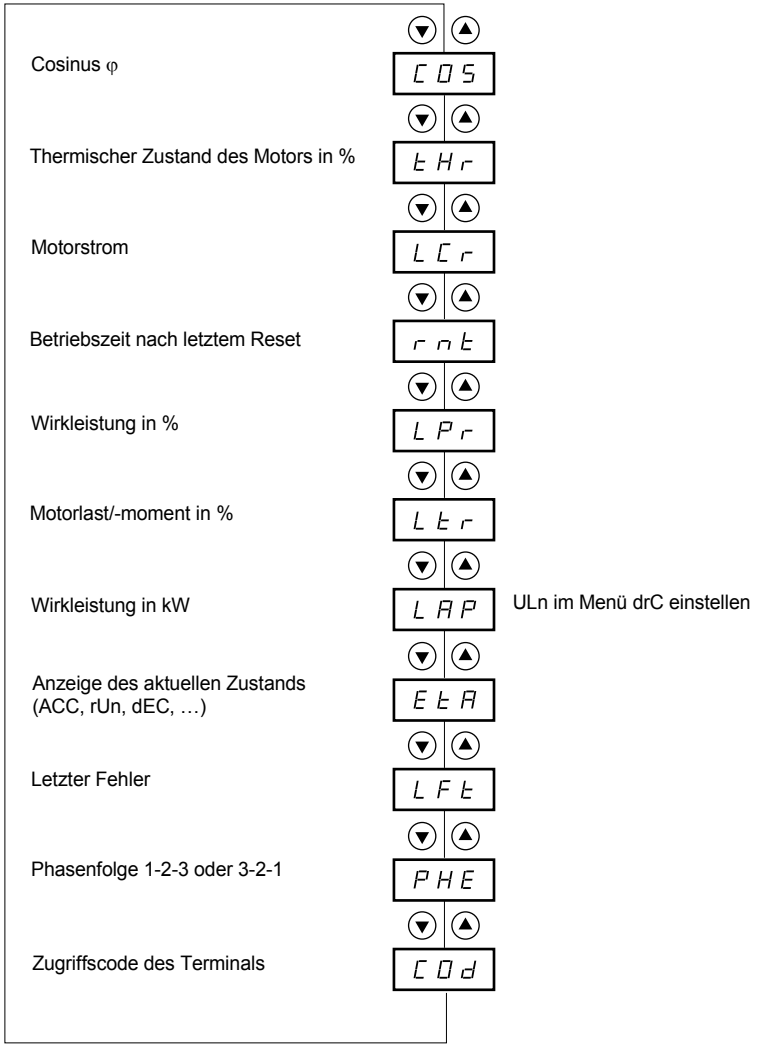

Menü "Angezeigter Parameter" SUP

Der angezeigte Parameter kann im Stillstand oder während des Betriebs verändert werden.
In der Werkseinstellung wird der Motorstrom angezeigt (Parameter LCr).
Die gewählte Anzeige wird wie folgt gespeichert:

- 1. Drücken der ENT-Taste: Die Auswahl ist vorübergehend und wird beim nächsten Abschalten gelöscht.
- 2. Drücken der ENT-Taste für die Dauer von 2 Sekunden: Die Anzeige blinkt, und die Auswahl ist außer bei einer Veränderung definitiv.

Code	Parameter	Einheit
COS	**Cosinus** φ	0,01
tHr	**Thermischer Zustand des Motors** Dieser Parameter nimmt Werte von 0 bis 125 % an. 100 % entspricht dem thermischen Nennzustand für den eingestellten Strom In.	%
LCr	**Motorstrom** In Ampere bis 999 A (Beispiele: 01.5 = 1,5 A ; 15.0 = 15 A ; 150 = 150 A) In Kilo-Ampere ab 1000 A (Beispiele: 1.50 = 1500 A ; 1.15 = 1150 A)	A oder kA
rnt	**Betriebszeit** in Stunden nach dem letzten Reset. In Stunden bis 999 h (Beispiele: 001 = 1 h ; 111 = 111 h) In tausend Stunden von 1000 bis 65535 (Beispiele: 1.11 = 1110 h ; 11.1 = 11100 h) Über 65535 h (65.5) wird die Anzeige auf Null zurückgesetzt. Die Betriebszeit wird gezählt, wenn der Motor sich nicht im Stillstand befindet, d. h. sobald die Thyristoren gezündet werden (Heizung, Hochlauf, Dauerbetrieb, Auslauf, Bremsung) und im Dauerbetrieb mit überbrücktem Sanftanlasser. Der Reset des Betriebsstundenzählers kann online über ein Steuerungswort und über das Terminal im Stillstand erfolgen. Beim Abschalten des Steuerungsteils wird der Betriebsstundenzähler im EEPROM gespeichert.	h oder kh
LPr	**Wirkleistung** Dieser Parameter nimmt Werte von 0 bis 255 % an. 100 % entspricht der Leistung bei Nennstrom und voller Spannung.	%
Ltr	**Motorlast/-moment** Dieser Parameter nimmt Werte von 0 bis 255 % an. 100 % entspricht dem Nennmoment.	%
LAP	**Wirkleistung in kW** Für diesen Parameter muss der exakte Wert der Netzspannung ULn im Menü drC konfiguriert werden.	kW
EtA	**Anzeige des aktuellen Zustands** - nLP : Sanftanlasser ohne Fahrbefehl und Leistung nicht mit Spannung versorgt - rdY : Sanftanlasser ohne Fahrbefehl und Leistung mit Spannung versorgt - tbS : Startverzögerung nicht verstrichen - ACC : im Hochlauf - dEC : im Auslauf - rUn : Funktion im stabilen Betrieb - brL : in Bremsung - CLI : Sanftanlasser in Strombegrenzung - nSt : Erzwungener " Freier Auslauf " über serielle Schnittstelle	
LFt	**Letzter Fehler** (241). Wenn keine Störung gespeichert wurde, erscheint auf der Anzeige **nOF.** Wenn Fehler unterdrückt wurden, zeigt das Display **InH** an.	
PHE	**Phasenfolge** vom Sanftanlasser aus gesehen (Drehfeldüberwachung) - 123 : direkte Drehrichtung (L1-L2-L3) - 321 : umgekehrte Drehrichtung (L3-L2-L1)	

Menü "Angezeigter Parameter" SUP

Code	Parameter
COd	**Zugriffscode des Terminals** Ermöglicht den Schutz der Konfiguration des Sanftanlassers über einen Zugriffscode. **Achtung: Vor der Eingabe eines Codes sollten Sie diesen sorgfältig notieren** • **OFF** : Der Zugriff wird durch keinen Code gesperrt. - Um den Zugriff zu sperren, geben Sie einen Code (2 bis 999) ein. Erhöhen Sie die Anzeige dabei über ▲, und drücken Sie anschließend auf ENT. Darauf erscheint "On", und der Zugriff auf den Parameter ist gesperrt. • **On** : Der Zugriff wird über einen Code (2 bis 999) gesperrt. - **Um den Zugriff freizuschalten**, geben Sie den Code ein. Erhöhen Sie die Anzeige dabei über ▲, und drücken Sie anschließend auf ENT. Der Code wird weiterhin angezeigt, und der Zugriff ist bis zum nächsten Abschalten freigegeben. Beim nächsten Einschalten wird der Zugriff auf den Parameter wieder gesperrt. - **Wird ein fehlerhafter Code eingegeben**, schaltet die Anzeige wieder auf "On", und der Zugriff auf den Parameter bleibt gesperrt. • **XXX** : Der Zugriff auf den Parameter ist freigegeben (der Code wird weiterhin angezeigt). - **Um die Sperre mit demselben Code zu reaktivieren**, wenn der Zugriff auf den Parameter freigegeben ist, kommen Sie über die Taste ▼ zurück auf "On", und drücken anschließend auf ENT. "On" wird weiterhin angezeigt, und der Zugriff auf den Parameter ist gesperrt. - **Um den Zugriff mit einem neuen Code zu sperren**, wenn der Zugriff auf den Parameter freigegeben ist, geben Sie den neuen Code ein und verändern dabei die Anzeige über ▲ oder ▼ und drücken anschließend auf ENT. Darauf erscheint "On", und der Zugriff auf den Parameter ist gesperrt. - **Um die Sperre zu entfernen**, wenn der Zugriff auf den Parameter freigegeben ist, kommen Sie über die Taste ▼ zurück auf "OFF" und drücken anschließend auf ENT. "OFF" wird weiterhin angezeigt, der Zugriff auf den Parameter ist freigegeben und bleibt dies auch nach einem Abschalten und anschließendem Wiedereinschalten.

Wenn der Zugriff über einen Code gesperrt ist, sind nur die Überwachungsparameter zugänglich, und der angezeigte Parameter kann nur provisorisch ausgewählt werden.

Tabelle Kompatibilität

Die Auswahl der Applikationsfunktionen kann durch Inkompatibilitäten von Funktionen untereinander beschränkt sein. Die Funktionen, die nicht aufgelistet sind, sind nicht von solchen Einschränkungen betroffen.

Funktionen	Halt über geführten Auslauf	Halt über gebremsten Auslauf	Erzwungener Freier Auslauf	Thermischer Schutz	Verlust einer Motorphase	Verdrahtung in der Dreieckswicklung des Motors	Test an Motor mit geringer Leistung	Kaskade	Motorheizung
Halt über geführten Auslauf									
Halt über gebremsten Auslauf									
Erzwungener Freier Auslauf									
Thermischer Schutz									**(2)**
Verlust einer Motorphase									
Verdrahtung in der Dreieckswicklung des Motors									
Test an Motor mit geringer Leistung									
Kaskade									
Motorheizung				**(2)**					

Funktion kompatibel
Funktion nicht kompatibel
Ohne Bezug

(1) Verlust einer nicht überwachten Motorphase
(2) Während der Motorheizung ist der thermische Motorschutz nicht gewährleistet. Regel : Einen entsprechenden Heizstromwert IPr einstellen

Wartung

Der Altistart 48 erfordert keine vorbeugende Wartung. Dennoch sollten in regelmäßigen Abständen:
- Zustand und Festigkeit der Verbindungen kontrolliert werden
- geprüft werden, dass die Temperatur in der Nähe des Gerätes im zulässigen Bereich bleibt und dass die Belüftung wirksam arbeitet (durchschnittliche Lebensdauer von Lüftern: 3 bis 5 Jahre, je nach Einsatzbedingungen)
- der Kühlkörper, falls erforderlich, entstaubt werden

Unterstützung bei der Wartung

Bei einer Störung während der Inbetriebnahme oder des Betriebs muss zunächst sichergestellt werden, dass die Empfehlungen bezüglich Umgebung, Einbau und Anschluss befolgt wurden.

Die zuerst festgestellte Störung wird gespeichert und auf dem Terminal angezeigt: Der Sanftanlasser sperrt sich, und die Relais R1 und R2 ändern je nach Belegung ihren Zustand.

Löschen von Störungen/Fehlern

Bei einer Störung, die ein Wiedereinschalten nicht zulässt, die Spannungsversorgung des Steuerteils des Sanftanlassers unterbrechen.
Abwarten, bis die Anzeige komplett erloschen ist.
Den Grund für die Störung feststellen, und diese beseitigen.
Spannung wieder herstellen: Ist die Störung behoben, wird die Fehleranzeige gelöscht.

In bestimmten Fällen erfolgt nach Verschwinden der Störung ein automatischer Wiederanlauf, falls diese Funktion programmiert wurde.

Menü Überwachung

Dieses Menü unterstützt bei der Vorbeugung und Ursachenforschung von Störungen mittels Anzeige des Zustandes des Sanftanlassers und seiner aktuellen Werte.

Ersatzteile und Reparatur

Wenden Sie sich bitte an die Service-Abteilung von Schneider Electric.

Störungen - Ursachen - Behebung

Tritt eine Störung bei der Inbetriebnahme des Gerätes auf, sollte in der Regel auf die Werkseinstellung zurückgegriffen werden, um danach die benötigten Einstellungen schrittweise vorzunehmen.

Kein Hochlaufen ohne Fehleranzeige

- Keine Anzeige: Prüfen, ob die Netzspannung an der Spannungsversorgung des Steuerteils CL1/CL2 anliegt (193)
- Prüfen, ob der angezeigte Code nicht dem normalen Betriebszustand des Gerätes entspricht (211)
- Prüfen, ob die Fahrbefehle RUN/STOP erteilt wurden (194)

Störungen, die ein Wiedereinschalten nicht zulassen

Bei diesem Störungstyp sperrt sich der Sanftanlasser, und der Motor geht in den freien Auslauf über.

Signalisierung:
- Öffnen des Relais “Ende des Hochlaufvorgangs” R2
- Öffnen des Relais R1 (infolge des Sperrens des Sanftanlassers)
- Aufleuchten des Fehlercodes auf der Anzeige
- Speichern der fünf letzten Fehlermeldungen, die mit der Software PowerSuite angezeigt werden können

Bedingungen für den Wiederanlauf:
- Behebung der Störungsursachen
- Unterbrechung, dann Wiederherstellung der Spannungsversorgung des Steuerteils

Angezeigte Störung	Wahrscheinliche Ursache	Maßnahme, Behebung
InF	**Interner Fehler**	Spannungsversorgung des Steuerteils unterbrechen, dann wiederherstellen. Besteht die Störung weiterhin, wenden Sie sich bitte an Schneider Electric.
OCF	**Überstrom:** • Impedanter Kurzschluss am Ausgang des Sanftanlassers • Interner Kurzschluss • Überbrückungsschütz verklebt • Überdimensionierung Sanftanlasser	Sanftanlasser spannungslos machen. • Verbindungskabel und Isolierung des Motors überprüfen • Thyristoren überprüfen • Überbrückungsschütz überprüfen (Kontakt verklebt) • Kontrollieren Sie den Parameter bSt im Menü drC auf Seite 223.
PIF	**Drehfeldänderung** Die Phasenfolge des Netzes stimmt nicht mit der über PHr im Menü Schutz getroffenen Auswahl überein.	Zwei Phasen des Netzes vertauschen oder PHr = no setzen
EEF	**Störung des internen Speichers** (EEPROM)	Spannungsversorgung des Steuerteils unterbrechen, dann wiederherstellen. Besteht die Störung weiterhin, wenden Sie sich bitte an Schneider Electric.

Störungen, die bei Verschwinden der Ursachen von selbst ein Wiedereinschalten zulassen

Bei diesem Störungstyp sperrt sich der Sanftanlasser, und der Motor geht in den freien Auslauf über.

Signalisierung:
- Öffnen des Relais “Ende des Hochlaufvorgangs” R2.
- Öffnen des Relais R1, aber nur wenn es als Netzschützansteuerung konfiguriert ist.
- Aufleuchten des Fehlercodes auf der Anzeige, solange die Störung andauert.
- Speichern der fünf letzten Fehlermeldungen, die mit der Software PowerSuite angezeigt werden können.

Bedingungen für den Wiederanlauf:
- Behebung der Störungsursachen.
- Bei 2-Draht-Steuerung muss der Fahrbefehl am Eingang RUN gehalten werden.
- Bei 3-Draht-Steuerung ist ein neuer Fahrbefehl (ansteigende Flanke) am Eingang RUN erforderlich.

Angezeigte Störung	Wahrscheinliche Ursache	Maßnahme, Behebung
CFF	**Unzulässige Konfiguration** beim Motorstart.	• Im Menü Antrieb drC zur Werkseinstellung zurückkehren. • Sanftanlasser neu konfigurieren.
CFI	**Unzulässige Konfiguration** Die über die serielle Schnittstelle in das Gerät geladene Konfiguration ist inkonsistent.	• Die zuvor geladene Konfiguration überprüfen. • Eine konsistente Konfiguration laden

Störungen, die ein Wiedereinschalten zulassen und bei denen es zu einem automatischen Wiederanlauf kommen kann (1)

Bei diesem Störungstyp sperrt sich der Sanftanlasser, und der Motor geht in den freien Auslauf über.

Signalisierung bei automatischem Wiederanlauf:
- Öffnen des Relais “Ende des Hochlaufvorgangs” R2
- Öffnen des Relais R1, aber nur wenn es als Netzschützansteuerung ausgeführt ist. R1 bleibt geschlossen, wenn es als Fehlermelderelais ausgeführt ist, 228
- Aufleuchten des Fehlercodes auf der Anzeige, solange die Störung andauert
- Speichern der fünf letzten Fehlermeldungen, die mit der Software PowerSuite angezeigt werden können

Bedingungen für den Wiederanlauf bei folgenden Störungen mit automatischem Wiederanlauf (nur bei 2-Draht-Steuerung):
- Behebung der Störungsursachen
- Fahrbefehl am Eingang RUN gehalten
- Es werden 6 Versuche für einen Wiederanlauf im Zeitzyklus von 60 Sekunden durchgeführt. Beim sechsten Versuch, und noch vorhandenem Fehler, muß ein manueller Reset erfolgen (siehe nachstehende Seite) und R1 wird geöffnet, wenn es als Fehlerrelais konfiguriert wurde.

Angezeigte Störung	Wahrscheinliche Ursache	Maßnahme, Behebung
FrF (2)	**Netzfrequenz außerhalb Toleranz.** Diese Störung kann im Menü “Zusätzliche Einstellungen” drC, Parameter FrC, konfiguriert werden.	• Netz prüfen. • Prüfen, ob die Konfiguration des Parameters FrC mit dem angeschlossenen Netz vereinbar ist (z. B. Generator).
PHF (3)	**Ausfall einer Netzphase**	• Überprüfen Sie die Netzleitung, die Frequenzstabilität, den Anschluss am Anlasser und alle Geräte zwischen der Netzleitung und dem Anlasser (Schütz, Sicherungen, Leistungsschalter usw.). • Falls ein Überbrückungsschütz verwendet wird, prüfen Sie den Mechanismus (Verschleiß, mechanisches Spiel, Schmierung, Blockierungen...).
	Ausfall einer Motorphase Wenn der Motorstrom in einer Phase für 0,5 s oder in allen drei Phasen für 0,2 s unter einen eingestellten Schwellwert PHL sinkt. Diese Störung kann im Menü Schutz PrO, Parameter PHL, konfiguriert werden.	• Prüfen Sie den Motoranschluss (Klemmen T1, T2, T3) und die eventuell zwischen Sanftanlasser und Motor geschalteten Trennvorrichtungen (Schütze, Trennschalter, ...) prüfen. • Zustand des Motors prüfen. • Prüfen, ob die Konfiguration des Parameters PHL zum eingesetzten Motor passt.

(1) Ist die Funktion automatischer Wiederanlauf nicht gewählt, 245 bezüglich Signalisierung und Bedingungen für den Wiederanlauf bei diesen Störungen
(2) Nach jedem Einschalten der Spannungsversorgung des Steuerteils erfolgt die FRF-Erkennung nur beim ersten Einschalten der Netzspannungsversorgung.
(3) Beim nächsten Einschalten der Netzspannungsversorgung führt eine fehlerhafte Frequenz auch zu einem Synchronisationsfehler PHF.

Störungen, die ein Wiedereinschalten zulassen und bei denen es zu einem automatischen Wiederanlauf kommen kann (1)

Bedingungen für den Wiederanlauf bei folgenden Störungen:
- Behebung der Störungsursachen
- Fahrbefehl wird gehalten (nur bei 2-Draht-Steuerung)

Angezeigte Störung	Wahrscheinliche Ursache	Maßnahme, Behebung
USF	**Netz nicht vorhanden** bei einem Fahrbefehl.	• Spannung und Schaltkreis der Leistungsversorgung prüfen.
CLF	Ausfall der Spannungsversorgung des Steuerteils	• Unterbrechung von mehr als 200 ms an CL1/CL2

(1) Ist die Funktion automatischer Wiederanlauf nicht gewählt, 245 bezüglich Signalisierung und Bedingungen für den Wiederanlauf bei diesen Störungen

Fehler, die über einen manuellen Reset quittiert werden können

Bei diesem Störungstyp sperrt sich der Sanftanlasser, und der Motor geht in den freien Auslauf über.

Signalisierung:
- Öffnen des Relais “Ende des Hochlaufvorgangs” R2.
- Öffnen des Relais R1.
- Aufleuchten des Fehlercodes auf der Anzeige, solange die Störung andauert.
- Speichern der fünf letzten Fehlermeldungen, die mit der Software PowerSuite angezeigt werden können.

Bedingungen für den Wiederanlauf:
- Behebung der Störungsursachen.
- Ein Fahrbefehl (2- oder 3-Draht-Steuerung, erfordert eine ansteigende Flanke am Eingang RUN), um die Störung rückzustellen (1).
- Ein weiterer Fahrbefehl (2- oder 3-Draht-Steuerung, erfordert eine ansteigende Flanke am Eingang RUN), um den Motor anlaufen zu lassen.

Angezeigte Störung	Wahrscheinliche Ursache	Maßnahme, Behebung
SLF	**Fehler serielle Schnittstelle**	• Anschluss des Steckers RS485 prüfen.
EtF	**Externer Fehler**	• Berücksichtigte Störung prüfen.
StF	**Hochlaufzeit zu lang**	• Mechanik prüfen (Verschleiss, mechanische Schwergängigkeit, Schmierung, Hindernisse,...). • Wert der Einstellung tLS im Menü PrO prüfen Seite 219. • Prüfen, ob Sanftanlasser und Motor für die bestehende mechanische Beanspruchung ausgelegt sind.
OLC	**Überstrom.**	• Mechanik prüfen (Verschleiss, mechanische Schwergängigkeit, Schmierung, Hindernisse,...). • Werte der Parameter LOC und tOL im Menü PrO prüfen Seite 220.
OLF	**Thermischer Fehler des Motors.**	• Mechanik prüfen (Verschleiss, mechanische Schwergängigkeit, Schmierung, Hindernisse,...). • Prüfen, ob Sanftanlasser und Motor für die bestehende mechanische Beanspruchung ausgelegt sind. • Wert des Parameters tHP im Menü PrO Seite 219 und des Parameters In im Menü SEt Seite 214 prüfen. • Korrekte elektrische Isolierung des Motors prüfen. • Vor dem Wiederanlauf Abkühlung des Motors abwarten.
OHF	**Thermischer Fehler des Sanftanlassers.**	• Mechanik prüfen (Verschleiss, mechanische Schwergängigkeit, Schmierung, Hindernisse,...). • Prüfen, ob der Sanftanlasser für den eingesetzten Motor und die bestehende mechanische Beanspruchung ausgelegt ist. • Funktionstüchtigkeit des Lüfters prüfen, falls beim eingesetzten ATS48 vorhanden, ebenso ungehinderten Luftdurchfluss und Sauberkeit des Kühlkörpers. Sicherstellen, dass die Montagevorschriften eingehalten wurden. • Vor dem Wiederanlauf Abkühlung des ATS48 abwarten.

(1) Das Rückstellen bei einem Fahrbefehl ist inaktiv, wenn LI mit der Funktion "Reset Störung (LIr)" belegt ist.

Fehler, die über einen manuellen Reset quittiert werden können unique-ment

Angezeigte Störung	Wahrscheinliche Ursache	Maßnahme, Behebung
OtF	**Durch die PTC-Fühler festgestellte thermische Störung des Motors.**	• Mechanik prüfen (Verschleiss, mechanische Schwergängigkeit, Schmierung, Hindernisse,...). • Prüfen, ob Sanftanlasser und Motor für die bestehende mechanische Beanspruchung ausgelegt sind. • Wert des Parameters PtC im Menü Pro prüfen Seite 221 • Vor dem Wiederanlauf Abkühlung des Motors abwarten.
ULF	**Unterlast Motor.**	• Hydraulischen Kreislauf prüfen. • Wert der Parameter LUL und tUL im Menü Schutz PrO prüfen (Seite 219).
LrF	**Rotor blockiert** im Nennbetrieb. Diese Störung ist nur im Dauerbetrieb bei vorhandenem Überbrückungsschütz des Sanftanlassers aktiviert. Sie wird festgestellt, wenn der Strom in einer Phase für mehr als 0,2 s größer oder gleich 5 In ist.	• Mechanik prüfen (Verschleiss, mechanische Schwergängigkeit, Schmierung, Hindernisse,...).
Err1	Nur möglich mit dem remote Terminal: Die Werte für tbr und For sind nicht korrekt.	• koniguriert tbr = 19,2 und FOr = 8n1 oder PCt = siehe auf Seite 235

Rückstellen der Störungen über einen Logikeingang

Wenn ein Logikeingang LI mit "Reset der thermischen Störung des Motors" oder "Reset der Störungen, die ein Wiedereinschalten zulassen" konfiguriert ist, wird dazu folgendes benötigt:
- Ein Impuls am Logikeingang LI
- Bei 2-Draht-Steuerung läuft der Motor wieder an, wenn der Fahrbefehl am Eingang RUN gehalten wird
- Bei 3-Draht-Steuerung läuft der Motor bei einem neuen Fahrbefehl (ansteigende Flanke) am Eingang RUN wieder an.

Tabellen für Konfiguration / Einstellungen

Sanftanlasser ATS 48.....
Kundenspezifische Bezeichnung :.....
Eventueller Zugriffscode :.....

Menü "Einstellung" SEt

Code	Werkseinstellung	Einstellung des Kunden	Code	Werkseinstellung	Einstellung des Kunden
In	(1)		dEC	15 s	
ILt	400 %		EdC	20 %	
ACC	15 s		brC	50 %	
t90	20 %		EbA	20 %	
StY	-F-				

Die grau hinterlegten Parameter erscheinen, wenn die entsprechenden Funktionen konfiguriert wurden.

Menü "Schutz" Pr O

Code	Werkseinstellung	Einstellung des Kunden	Code	Werkseinstellung	Einstellung des Kunden
tHP	10		tOL	10,0	
ULL	OFF		PHr	no	
LUL	60 %		tbS	2 s	
tUL	60 %		PHL	10 %	
tLS	OFF		PtC	OFF	
O IL	OFF		ArS	OFF	
LOC	80 %		rtH	no	

Die grau hinterlegten Parameter erscheinen, wenn die entsprechenden Funktionen konfiguriert wurden.

(1) Hängt von der Baugröße des Sanftanlassers ab.

Tabellen für Konfiguration / Einstellungen

Menü "Zusätzliche Einstellungen" drC

Code	Werkseinstellung	Einstellung des Kunden	Code	Werkseinstellung	Einstellung des Kunden
tLI	OFF		LSC	50 %	
bSt	OFF		tIG	40 %	
dLt	OFF		CSC	OFF	
SSt	OFF		ULn	(1)	
CLP	On		FrC	AUt	

Die grau hinterlegten Parameter erscheinen, wenn die entsprechenden Funktionen konfiguriert wurden.

Menü "Belegung der Eingänge / Ausgänge" IO

Code	Werkseinstellung	Einstellung des Kunden	Code	Werkseinstellung	Einstellung des Kunden
LI3	LIA		r1	r1I	
LI4	LIL		r3	rn1	
IPr	0 %		AO	OCr	
tPr	5 mn		O4	020	
LO1	tA1		ASC	200	
LO2	rn1				

Die grau hinterlegten Parameter erscheinen, wenn die entsprechenden Funktionen konfiguriert wurden.

(1) -ATS 48•••Q : 400 V
-ATS 48•••Y : 460 V

Menü "Parameter 2. Motor" St2

Dieses Menü ist nur sichtbar, wenn ein Logikeingang mit der Funktion "Aktivierung des zweiten Parametersatzes für den Motor" (LIS) im Menü "Belegung der Eingänge / Ausgänge I O" belegt ist.

Code	Werkseinstellung	Einstellung des Kunden	Code	Werkseinstellung	Einstellung des Kunden
In2	(1)		dE2	15 s	
IL2	400 %		Ed2	20 %	
AC2	15 s		tL2	OFF	
t92	20 %		t I2	40 %	

Menü "Kommunikation" COP

Code	Werkseinstellung	Einstellung des Kunden	Code	Werkseinstellung	Einstellung des Kunden
Add	0		tLP	5 s	
tbr	19,2 kBit / s		PCt	OFF	
FOr	8n1				

(1) Hängt von der Baugröße des Sanftanlassers ab.

De forma general, cualquier intervención, tanto en la parte eléctrica como en la mecánica de la instalación o de la máquina, debe ir precedida de la interrupción de la alimentación de control (CL1 - CL2) y de potencia (1/L1 - 3/L2 - 5/L3) del Altistart 48.
En funcionamiento, el motor se puede parar eliminando la orden de marcha mientras el arrancador permanece en tensión. Si la seguridad del personal exige la prohibición de cualquier arranque intempestivo, este bloqueo electrónico se hace insuficiente: prevea una interrupción del circuito de potencia.

El arrancador incluye dispositivos de seguridad que pueden, en caso de que se produzcan fallos, controlar la parada del arrancador y la parada del motor. Este motor puede sufrir una parada debido a bloqueo mecánico. También, las variaciones de tensión o las interrupciones de alimentación también pueden ser el motivo de determinadas paradas.
La desaparición de las causas de las paradas puede provocar un rearranque que suponga un riesgo para determinadas máquinas o instalaciones, especialmente para las que deben ser conformes a las normas relativas a la seguridad.
Es importante, por tanto, para estos casos, que el usuario se proteja contra dichas posibilidades de rearranque con la ayuda de un detector de baja velocidad que provoque, en caso de parada no programada del motor, la interrupción de la alimentación del arrancador.

Los productos y materiales que se presentan en este documento son susceptibles de sufrir cambios o modificaciones tanto en el aspecto técnico como en el de utilización. La descripción de los mismos no puede, bajo ningún concepto, revestir un carácter contractual.

La instalación y la puesta en marcha de este arrancador deben efectuarse según las normas internacionales IEC y las normas nacionales locales. Su cumplimiento es responsabilidad del integrador, que, si se encuentra en la comunidad europea, debe respetar, entre otras normas, la directiva CEM.
El respeto de estas normas fundamentales de la directiva CEM viene condicionado especialmente por la aplicación de las prescripciones que contiene el presente documento.

El Altistart 48 debe ser considerado como un componente; no es ni una máquina ni un aparato preparado para funcionar según las directivas europeas (directiva sobre maquinaria y directiva sobre compatibilidad electromagnética). Es responsabilidad del integrador final garantizar la conformidad de su máquina a la normativa.

Contenido

Etapas de la instalación 252
Configuración de fábrica 254
Recomendaciones preliminares 255
Especificaciones técnicas 256
Recomendaciones de empleo 257
Asociación arrancador - motor 260
Dimensiones 266
Precauciones de instalación 268
Montaje en cofre o en armario 269
Borneros de potencia 270
Borneros de control 275
Cableado / Control RUN - STOP 276
Esquema de aplicación 277
Protecciones térmicas 287
Visualizador y programación 291
Opción terminal remoto 294
Menú Ajustes SEt 295
Menú Protección PrO 300
Menú Ajustes avanzados drC 304
Menú Asignación de entradas / salidas IO 308
Menú Parámetros del 2º motor St2 312
Menú Comunicación COP 316
Menú Supervisión SUP 318
Tabla de compatibilidad 321
Mantenimiento 322
Fallos - causas - soluciones 323
Tablas de memorización configuración/ajustes 329

1 - Recepción del Altistart 48

- Asegúrese de que la referencia del arrancador que aparece inscrita en la etiqueta pertenece a la factura de entrega correspondiente a la orden de pedido.
- Abra el embalaje y compruebe que el Altistart 48 no ha sufrido daños durante el transporte.

⚠ ADVERTENCIA

EQUIPO DAÑADO

No maneje ni instale ningún arrancador progresivo o accesorio del arrancador progresivo que parezca estar dañado.

Si no se respetan estas instrucciones pueden producirse graves lesiones, daños materiales o incluso la muerte.

2 - Instalación del variador verticalmente

- Fijación del Altistart 48 siguiendo las recomendaciones de la **página 268** y la **página 269.**

3 - Conectar al Altistart 48:

- Conectar el arrancador suave en el tierra.
- La red de alimentación de control (CL1 - CL2), asegurándose de que está sin tensión
- La red de alimentación de potencia (1/L1 - 3/L2 - 5/L3), asegurándose de que está sin tensión
- El motor (2/T1 - 4/T2 - 6/T3), asegurándose de que su acoplamiento corresponde a la tensión de la red

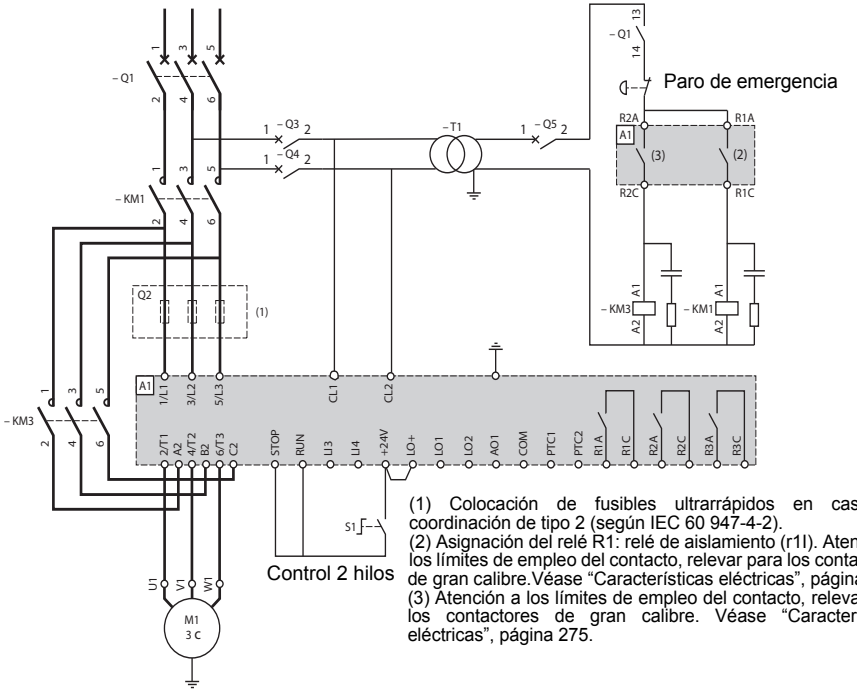

(1) Colocación de fusibles ultrarrápidos en caso de coordinación de tipo 2 (según IEC 60 947-4-2).
(2) Asignación del relé R1: relé de aislamiento (r1I). Atención a los límites de empleo del contacto, relevar para los contactores de gran calibre.Véase “Características eléctricas”, página 275.
(3) Atención a los límites de empleo del contacto, relevar para los contactores de gran calibre. Véase “Características eléctricas”, página 275.

Note: Per altri schemi di cablaggio, consult **la página 277 to página 286**.
En caso de utilizarse el ATS48●●●Q o ATS48●●●YS316 en los devanados del triángulo del motor, siga las recomendaciones de las **páginas 258** y **259** y los esquemas de la **página 279.**

4 - Poner el control en tensión (CL1-CL2)

- Encendido sin la parte de potencia y sin dar la orden de marcha.
- Verificar que S1 está abierto.
- Cerrar: Q1, después Q3, después Q4.
- El arrancador muestra: nLP (para indicar que la potencia está sin tensión)

ATENCIÓN

RIESGO DE DAÑOS EN EL ARRANCADOR PROGRESIVO

- Compruebe la alimentación eléctrica en CL1 - CL2:
  ATS48●●●Q debe ser 220 - 415 V CA
  ATS48●●●Y debe ser 110 - 230 V CA

Si no se respetan estas instrucciones, pueden producirse daños en el equipo

5 - Ajuste In corriente nominal del motor

- Ajuste el valor de la corriente nominal del motor indicado en la placa de características.

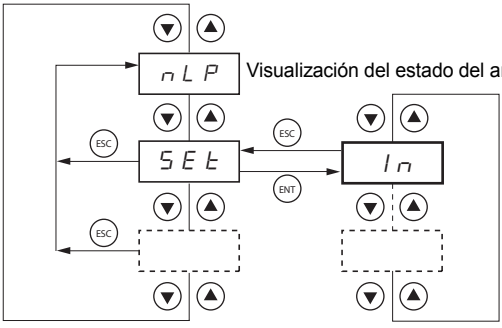

6 - Poner la potencia en tensión (1/L1 - 3/L2 - 5/L3)

- Cerrar: Q5.
- El arrancador muestra: rdy (para indicar que el arrancador está listo y en tensión)

7 - Arranque del motor

- Pulsar S1, para arrancar el motor.

8 - Sobre cómo solucionar problemas

- Véase Fallos - causas - soluciones **página 323**

ATENCIÓN

PELIGRO DE SOBRECALENTAMIENTO DEL MOTOR

El arrancador ATS 48 está configurado de fábrica para poder iniciar una aplicación estándar que no requiera funciones específicas y con un motor de clase de protección 10.
Se pueden modificar los ajustes siguiendo el método de acceso a los parámetros, **página 292.**
En cualquiera de los casos, el parámetro In debe ajustarse al valor de corriente indicado en la placa del motor.

Si no se respetan estas instrucciones, pueden producirse daños en el equipo

Configuración de fábrica

Preajustes

El Altistart 48 se entrega preajustado de fábrica para las condiciones de uso más habituales:

- Utilización del ATS 48 en la red de alimentación del motor (en lugar de insertado en “triángulo” en los devanados del motor)
- Corriente nominal del motor In:
  - ATS 48 •••Q: preajustado para un motor estándar de 400 voltios y 4 polos
  - ATS 48 •••Y: preajustado a la corriente NEC, motor de 460 voltios
- Corriente de limitación (ILt): 400% de la corriente In del motor
- Rampa de aceleración (ACC): 15 segundos
- Para inicial en el arranque (tq0): 20% del par nominal
- Parada (StY): Parada en rueda libre (-F-)
- Protección térmica del motor (tHP): curva de protección de clase 10
- Visualización: rdY (arrancador listo) con tensión de potencia y control presentes, corriente del motor en funcionamiento
- Entradas lógicas:
  - LI1: STOP
  - LI2: RUN
  - LI3: Forzado de parada en rueda libre (LIA)
  - LI4: Forzado en modo local (LIL)
- Salidas lógicas:
  - LO1: Alarma térmica del motor (tA1)
  - LO2: Motor alimentado (rnI)
- Salidas de relé:
  - R1: Relé de fallo (r1I)
  - R2: Relé de by-pass al final del arranque
  - R3: Motor alimentado (rnI)
- Salida analógica:
  - AO: Corriente del motor (OCr, 0 - 20 mA)
- Parámetros de comunicación:
  - Conectado a través del enlace serie, el arrancador tiene la dirección lógica (Add) = « 0 »
  - Velocidad de transmisión (tbr): 19.200 bits por segundo
  - Formato de comunicación (FOr): 8 bits, sin paridad, 1 bit de parada (8n1)

En caso de que los valores mencionados sean compatibles con la aplicación, puede utilizarse el arrancador sin modificar los ajustes.

Recomendaciones preliminares

Manutención y almacenamiento

Para que el arrancador esté protegido antes de su instalación, proteja y almacene el aparato en su embalaje.

Manutención en la instalación

La gama Altistart 48 incluye aparatos de 6 tamaños, de peso y dimensiones diferentes.

Los arrancadores pequeños se pueden retirar de su embalaje e instalar sin manutención.

Los arrancadores grandes requieren un aparato de manutención, por lo que están equipados con “orejas” de manutención. Respetar las precauciones siguientes:

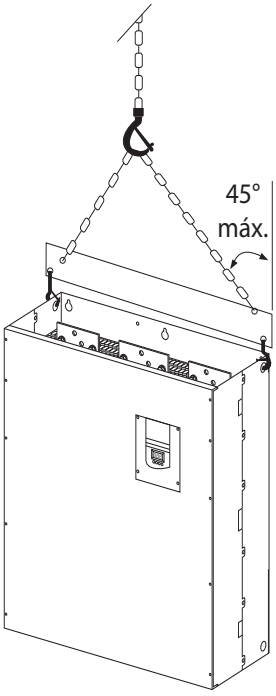

No manipular el arrancador por las barras de potencia

Especificaciones técnicas

Entorno

Grado de protección	• IP 20 para ATS 48D17• a C11• • IP00 para ATS 48C14• a M12• (1)
Resistencia a las vibraciones	Según la norma IEC 68-2-6: • 1,5 mm pico de 2 a 13 Hz • 1 gn de 13 a 200 Hz.
Resistencia a los choques	Según la norma IEC 68-2-27: • 15 gn, 11 ms
Contaminación ambiente máxima	Grado þ3 según IEC 947-4-2.
Humedad relativa máxima	93% sin condensación ni goteo, según la norma IEC 68-2-3
Temperatura ambiente cerca del aparato	En almacenamiento: - 25 °C a +70 °C En funcionamiento: • - 10 °C a + 40 °C sin desclasificación • hasta + 60 °C desclasificando la corriente un 2 % por °C por encima de los 40 °C
Altitud máxima de uso	1.000 m sin desclasificación (a mayor altitud, desclasifique la corriente un 2 % cada 100 m adicionales)
Posición de funcionamiento	Vertical a ± 10°

(1) Los ATS 48 con grado de protección IP00 deben estar equipados con una barrera de protección para garantizar la seguridad de las personas contra los contactos eléctricos

Par disponible

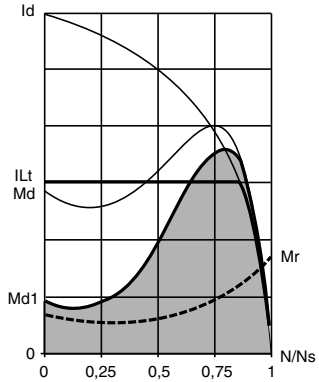

Las curvas Md e Id representan el arranque de un motor asíncrono en modo directo en la red.

La curva Md1 indica la envolvente del par disponible con un ATS 48, que depende de la corriente de limitación ILt. La progresividad del arranque se obtiene mediante el control del par motor en el interior de esta envolvente.

Mr: par resistente, que siempre debe ser inferior al par Md1.

Selección del arrancador-ralentizador

Un servicio de motor S1 corresponde a un arranque seguido de un funcionamiento con carga constante que permite alcanzar el equilibrio térmico.
Un servicio de motor S4 corresponde a un ciclo que incluye un arranque, un funcionamiento con carga constante y un tiempo de reposo. Este ciclo se caracteriza por un factor de marcha.

El Altistart 48 debe elegirse en función del tipo de aplicación “estándar” o “severa” y de la potencia nominal del motor. Las aplicaciones “estándar” o “severas” definen los valores límites de corriente y de ciclo para los servicios de motor S1 y S4.

Atención: no utilizar el Altistart 48 aguas arriba de receptores que no sean los motores (por ejemplo, transformadores o resistencias). No conecte condensadores de compensación del factor de potencia a las bornas de un motor controlado por un Altistart 48

Aplicación estándar

Ejemplo: bomba centrífuga.
En aplicación estándar, el Altistart 48 está dimensionado para responder a:
- En servicio S1: un arranque a 4 In durante 23 segundos o un arranque a 3 In durante 46 segundos, partiendo del estado frío.
- En servicio S4: un factor de marcha del 50% y 10 arranques por hora, con 3 In durante 23 segundos o 4 In durante 12 segundos, o bien un ciclo térmicamente equivalente.

En este caso, la protección térmica del motor debe ajustarse en la clase de protección 10.

Aplicación severa

Ejemplo: trituradora.
En aplicación severa, el Altistart 48 está dimensionado para responder a un servicio S4 con un factor de marcha del 50% y 5 arranques por hora, a 4 In durante 23 segundos o bien un ciclo térmicamente equivalente. En este caso, la protección térmica del motor debe ajustarse en la clase de protección 20. La corriente **In no debe permanecer con el ajuste de fábrica**, sino que debe ajustarse al valor indicado en la placa del motor.

Nota: es posible sobreclasificar el arrancador de un calibre, por ejemplo: selección de un ATS 48D17Q para un motor de 11 kW - 400 V en servicio S4.
Para ello, es preciso cortocircuitar el Altistart al final del arranque. Esto permite realizar 10 arranques por hora a 3 In durante 23 segundos como máximo o equivalente y la protección térmica del motor debe ajustarse a la clase 10.

Altistart 48 de la gama Q (230-415 V) conectado en línea con el motor o en el devanado del triángulo del motor

Altistart 48 conectado a la línea de alimentación del motor

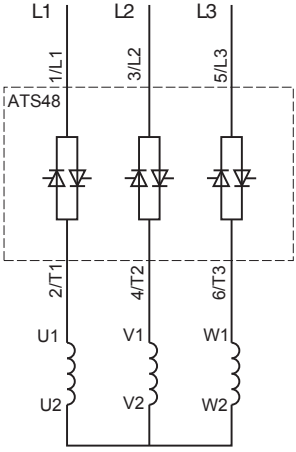

El acoplamiento del motor depende de la tensión de alimentación, **en este caso en estrella**

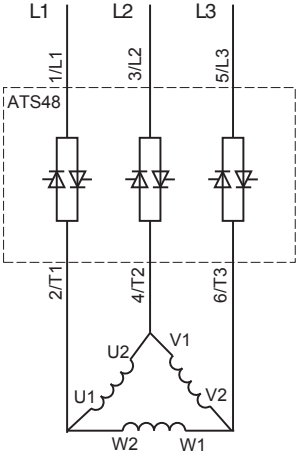

El acoplamiento del motor depende de la tensión de alimentación, **en este caso en triángulo**

Altistart 48 conectado en el devanado del triángulo del motor en serie con cada devanado

Los ATS48●●●Q o ATS48●●●YS316 asociados a motores acoplados en triángulo pueden insertarse en serie en los devanados del motor. De esta forma quedan sometidos a una corriente inferior a la corriente de línea en una relación √3, lo que permite utilizar un arrancador de calibre más bajo.

Esta posibilidad se puede configurar en el menú Ajustes avanzados (dLt = On).
Los ajustes de la corriente nominal y de la corriente de limitación, así como de la corriente mostrada en funcionamiento, siguen siendo los valores en línea, de forma que el usuario no tenga que calcularlos.

El montaje del Altistart 48 conectado en el devanado del triángulo del motor sólo es posible para los arrancadores ATS48●●●Q o ATS48●●●YS316. Este montaje:
- No frenado dinámico
- No permite la función en cascada
- No permite la función de calentamiento previo

Véanse las tablas de la página 260 para definir la asociación entre el arrancador y el motor.

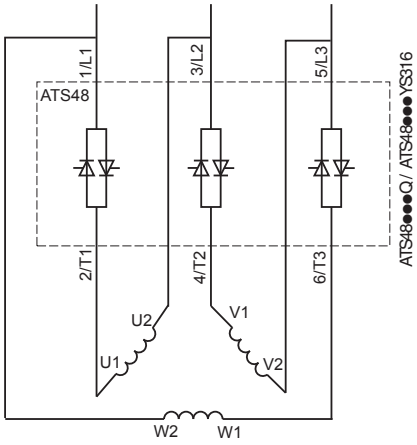

Acoplamiento en el devanado del triángulo del motor

Ejemplo:
Un motor de 400 V y 110 kW con una corriente de línea de 195 A (corriente que figura en la placa para el acoplamiento de triángulo).
La corriente de cada devanado es igual a 195/1,7 es decir, 114 A.
Se debe elegir el calibre del arrancador que posea la corriente nominal máxima permanente justo encima de esta corriente, es decir, el calibre 140 A (ATS48C14Q para una aplicación estándar).
Para evitar realizar este cálculo, utilice las tablas de la página 262 y 263, que indican directamente el calibre del arrancador correspondiente a la potencia del motor en función del tipo de aplicación.

Aplicación estándar, red de 230 / 415 V, arrancador en línea

Motor		Arrancador 230 / 415 V (+ 10% - 15%) - 50 / 60 Hz		
Potencia indicada en la placa del motor		Corriente máx. permanente en clase 10	Calibre ICL	Referencia del arrancador
230 V	400 V			
kW	**kW**	**A**	**A**	
4	7,5	17	17	ATS 48D17Q
5,5	11	22	22	ATS 48D22Q
7,5	15	32	32	ATS 48D32Q
9	18,5	38	38	ATS 48D38Q
11	22	47	47	ATS 48D47Q
15	30	62	62	ATS 48D62Q
18,5	37	75	75	ATS 48D75Q
22	45	88	88	ATS 48D88Q
30	55	110	110	ATS 48C11Q
37	75	140	140	ATS 48C14Q
45	90	170	170	ATS 48C17Q
55	110	210	210	ATS 48C21Q
75	132	250	250	ATS 48C25Q
90	160	320	320	ATS 48C32Q
110	220	410	410	ATS 48C41Q
132	250	480	480	ATS 48C48Q
160	315	590	590	ATS 48C59Q
(1)	355	660	660	ATS 48C66Q
220	400	790	790	ATS 48C79Q
250	500	1000	1000	ATS 48M10Q
355	630	1200	1200	ATS 48M12Q

La corriente nominal del motor In no debe superar la corriente máx. permanente en clase 10.
(1) Valor no indicado cuando no existe motor normalizado correspondiente.

Desclasificación de temperatura

La tabla anterior tiene en cuenta una utilización a una temperatura ambiente de 40 °C máx.
El ATS 48 puede utilizarse hasta una temperatura ambiente de 60 °C con la condición de aplicar a la corriente máx. permanente en clase 10 una desclasificación del 2% por grado por encima de 40 °C.
Ejemplo: ATS 48D32Q a 50 °C desclasificación de 10 x 2% = 20%, 32 A pasa a 32 x 0,8 = 25,6 A (corriente nominal máx. del motor).

Aplicación severa, red de 230 / 415 V, arrancador en línea

Motor		Arrancador 230 / 415 V (+ 10% - 15%) - 50 / 60 Hz		
Potencia indicada en la placa del motor		Corriente máx. permanente en clase 20	Calibre ICL	Referencia del arrancador
230 V	400 V			
kW	**kW**	**A**	**A**	
3	5,5	12	17	ATS 48D17Q
4	7,5	17	22	ATS 48D22Q
5,5	11	22	32	ATS 48D32Q
7,5	15	32	38	ATS 48D38Q
9	18,5	38	47	ATS 48D47Q
11	22	47	62	ATS 48D62Q
15	30	62	75	ATS 48D75Q
18,5	37	75	88	ATS 48D88Q
22	45	88	110	ATS 48C11Q
30	55	110	140	ATS 48C14Q
37	75	140	170	ATS 48C17Q
45	90	170	210	ATS 48C21Q
55	110	210	250	ATS 48C25Q
75	132	250	320	ATS 48C32Q
90	160	320	410	ATS 48C41Q
110	220	410	480	ATS 48C48Q
132	250	480	590	ATS 48C59Q
160	315	590	660	ATS 48C66Q
(1)	355	660	790	ATS 48C79Q
220	400	790	1000	ATS 48M10Q
250	500	1000	1200	ATS 48M12Q

La corriente nominal del motor In no debe superar la corriente máx. permanente en clase 20.
(1) Valor no indicado cuando no existe motor normalizado correspondiente.

Desclasificación de temperatura

La tabla anterior tiene en cuenta una utilización a una temperatura ambiente de 40 °C máx.
El ATS 48 puede utilizarse hasta una temperatura ambiente de 60 °C con la condición de aplicar a la corriente máx. permanente en clase 20 una desclasificación del 2% por grado por encima de 40 °C.
Ejemplo: ATS 48D32Q a 50 °C desclasificación de 10 x 2% = 20%, 22 A pasa a 22 x 0,8 = 17,6 A (corriente nominal máx. del motor).

Aplicación estándar, red de 230 / 415 V, arrancador en el triángulo

Motor		Arrancador 230 / 415 V (+ 10% - 15%) - 50 / 60 Hz		
Potencia indicada en la placa del motor		Corriente máx. permanente en clase 10	Calibre ICL	Referencia del arrancador
230 V	400 V			
kW	**kW**	**A**	**A**	
7,5	15	29	29	ATS 48D17Q
9	18,5	38	38	ATS 48D22Q
15	22	55	55	ATS 48D32Q
18,5	30	66	66	ATS 48D38Q
22	45	81	81	ATS 48D47Q
30	55	107	107	ATS 48D62Q
37	55	130	130	ATS 48D75Q
45	75	152	152	ATS 48D88Q
55	90	191	191	ATS 48C11Q
75	110	242	242	ATS 48C14Q
90	132	294	294	ATS 48C17Q
110	160	364	364	ATS 48C21Q
132	220	433	433	ATS 48C25Q
160	250	554	554	ATS 48C32Q
220	315	710	710	ATS 48C41Q
250	355	831	831	ATS 48C48Q
(1)	400	1022	1022	ATS 48C59Q
315	500	1143	1143	ATS 48C66Q
355	630	1368	1368	ATS 48C79Q
(1)	710	1732	1732	ATS 48M10Q
500	(1)	2078	2078	ATS 48M12Q

La corriente nominal del motor In no debe superar la corriente máx. permanente en clase 10.
(1) Valor no indicado cuando no existe motor normalizado correspondiente.

Desclasificación de temperatura

La tabla anterior tiene en cuenta una utilización a una temperatura ambiente de 40 °C máx.
El ATS 48 puede utilizarse hasta una temperatura ambiente de 60 °C con la condición de aplicar a la corriente máx. permanente en clase 10 una desclasificación del 2% por grado por encima de 40 °C.
Ejemplo: ATS 48D32Q a 50 °C desclasificación de 10 x 2% = 20%, 55 A pasa a 55 x 0,8 = 44 A (corriente nominal máx. del motor).

Aplicación severa, red de 230 / 415 V, arrancador en el triángulo

Motor		Arrancador 230 / 415 V (+ 10% - 15%) - 50 / 60 Hz		
Potencia indicada en la placa del motor		Corriente máx. permanente en clase 20	Calibre ICL	Referencia del arrancador
230 V	400 V			
kW	**kW**	**A**	**A**	
5,5	11	22	29	ATS 48D17Q
7,5	15	29	38	ATS 48D22Q
9	18,5	38	55	ATS 48D32Q
15	22	55	66	ATS 48D38Q
18,5	30	66	81	ATS 48D47Q
22	45	81	107	ATS 48D62Q
30	55	107	130	ATS 48D75Q
37	55	130	152	ATS 48D88Q
45	75	152	191	ATS 48C11Q
55	90	191	242	ATS 48C14Q
75	110	242	294	ATS 48C17Q
90	132	294	364	ATS 48C21Q
110	160	364	433	ATS 48C25Q
132	220	433	554	ATS 48C32Q
160	250	554	710	ATS 48C41Q
220	315	710	831	ATS 48C48Q
250	355	831	1022	ATS 48C59Q
(1)	400	1022	1143	ATS 48C66Q
315	500	1143	1368	ATS 48C79Q
355	630	1368	1732	ATS 48M10Q
(1)	710	1732	2078	ATS 48M12Q

La corriente nominal del motor In no debe superar la corriente máx. permanente en clase 20.
(1) Valor no indicado cuando no existe motor normalizado correspondiente.

Desclasificación de temperatura

La tabla anterior tiene en cuenta una utilización a una temperatura ambiente de 40 °C máx.
El ATS 48 puede utilizarse hasta una temperatura ambiente de 60 °C con la condición de aplicar a la corriente máx. permanente en clase 20 una desclasificación del 2% por grado por encima de 40 °C.
Ejemplo: ATS 48D32Q a 50 °C desclasificación de 10 x 2% = 20%, 38 A pasa a 38 x 0,8 = 30,4 A (corriente nominal máx. del motor).

Aplicación estándar, red de 208 / 690 V, arrancador en línea

Motor							Arrancador 208 / 690 V (+ 10% - 15%) - 50 / 60 Hz		
Potencia indicada en la placa del motor							Corriente máx. permanente en clase 10	Calibre ICL	Referencia arrancador
208 V	230 V	440 V	460 V	500 V	575 V	690 V			
HP	**HP**	**kW**	**HP**	**kW**	**HP**	**kW**	**A**	**A**	
3	5	7,5	10	9	15	15	17	17	ATS 48D17Y
5	7,5	11	15	11	20	18,5	22	22	ATS 48D22Y
7,5	10	15	20	18,5	25	22	32	32	ATS 48D32Y
10	(1)	18,5	25	22	30	30	38	38	ATS 48D38Y
(1)	15	22	30	30	40	37	47	47	ATS 48D47Y
15	20	30	40	37	50	45	62	62	ATS 48D62Y
20	25	37	50	45	60	55	75	75	ATS 48D75Y
25	30	45	60	55	75	75	88	88	ATS 48D88Y
30	40	55	75	75	100	90	110	110	ATS 48C11Y
40	50	75	100	90	125	110	140	140	ATS 48C14Y
50	60	90	125	110	150	160	170	170	ATS 48C17Y
60	75	110	150	132	200	200	210	210	ATS 48C21Y
75	100	132	200	160	250	250	250	250	ATS 48C25Y
100	125	160	250	220	300	315	320	320	ATS 48C32Y
125	150	220	300	250	350	400	410	410	ATS 48C41Y
150	(1)	250	350	315	400	500	480	480	ATS 48C48Y
(1)	200	355	400	400	500	560	590	590	ATS 48C59Y
200	250	400	500	(1)	600	630	660	660	ATS 48C66Y
250	300	500	600	500	800	710	790	790	ATS 48C79Y
350	350	630	800	630	1000	900	1000	1000	ATS 48M10Y
400	450	710	1000	800	1200	(1)	1200	1200	ATS 48M12Y

La corriente nominal del motor In no debe superar la corriente máx. permanente en clase 10.
(1) Valor no indicado cuando no existe motor normalizado correspondiente.

Desclasificación de temperatura

La tabla anterior tiene en cuenta una utilización a una temperatura ambiente de 40 °C máx.
El ATS 48 puede utilizarse hasta una temperatura ambiente de 60 °C con la condición de aplicar a la corriente máx. permanente en clase 10 una desclasificación del 2% por grado por encima de 40 °C.
Ejemplo: ATS 48D32Y a 50 °C desclasificación de 10 x 2% = 20%, 32 A pasa a 32 x 0,8 = 25,6 A (corriente nominal máx. del motor).

Aplicación severa, red de 208 / 690 V, arrancador en línea

Motor							Arrancador 208 / 690 V (+ 10% - 15%) - 50 / 60 Hz		
Potencia indicada en la placa del motor							Corriente máx. permanente en clase 20	Calibre ICL	Referencia arrancador
208 V	230 V	440 V	460 V	500 V	575 V	690 V			
HP	**HP**	**kW**	**HP**	**kW**	**HP**	**kW**	**A**	**A**	
2	3	5,5	7,5	7,5	10	11	12	17	ATS 48D17Y
3	5	7,5	10	9	15	15	17	22	ATS 48D22Y
5	7,5	11	15	11	20	18,5	22	32	ATS 48D32Y
7,5	10	15	20	18,5	25	22	32	38	ATS 48D38Y
10	(1)	18,5	25	22	30	30	38	47	ATS 48D47Y
(1)	15	22	30	30	40	37	47	62	ATS 48D62Y
15	20	30	40	37	50	45	62	75	ATS 48D75Y
20	25	37	50	45	60	55	75	88	ATS 48D88Y
25	30	45	60	55	75	75	88	110	ATS 48C11Y
30	40	55	75	75	100	90	110	140	ATS 48C14Y
40	50	75	100	90	125	110	140	170	ATS 48C17Y
50	60	90	125	110	150	160	170	210	ATS 48C21Y
60	75	110	150	132	200	200	210	250	ATS 48C25Y
75	100	132	200	160	250	250	250	320	ATS 48C32Y
100	125	160	250	220	300	315	320	410	ATS 48C41Y
125	150	220	300	250	350	400	410	480	ATS 48C48Y
150	(1)	250	350	315	400	500	480	590	ATS 48C59Y
(1)	200	355	400	400	500	560	590	660	ATS 48C66Y
200	250	400	500	(1)	600	630	660	790	ATS 48C79Y
250	300	500	600	500	800	710	790	1000	ATS 48M10Y
350	350	630	800	630	1000	900	1000	1200	ATS 48M12Y

La corriente nominal del motor In no debe superar la corriente máx. permanente en clase 20.
(1) Valor no indicado cuando no existe motor normalizado correspondiente.

Desclasificación de temperatura

La tabla anterior tiene en cuenta una utilización a una temperatura ambiente de 40 °C máx.
El ATS 48 puede utilizarse hasta una temperatura ambiente de 60 °C con la condición de aplicar a la corriente máx. permanente en clase 20 una desclasificación del 2% por grado por encima de 40 °C.
Ejemplo: ATS 48D32Y a 50 °C desclasificación de 10 x 2% = 20%, 22 A pasa a 22 x 0,8 = 17,6 A (corriente nominal máx. del motor).

Dimensiones

ATS 48D17 • …C66 •

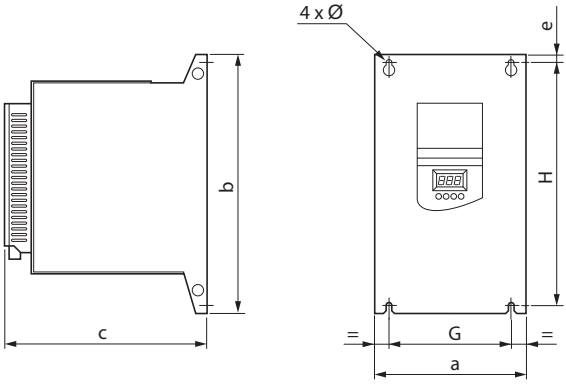

ATS 48	a mm	b mm	c mm	e mm	G mm	H mm	Ø mm	Peso kg
D17Q, D17Y D22Q, D22Y D32Q, D32Y D38Q, D38Y D47Q, D47Y	160	275	190	6,6	100	260	7	4,9
D62Q, D62Y D75Q, D75Y D88Q, D88Y C11Q, C11Y	190	290	235	10	150	270	7	8,3
C14Q, C14Y C17Q, C17Y	200	340	265	10	160	320	7	12,4
C21Q, C21Y C25Q, C25Y C32Q, C32Y	320	380	265	15	250	350	9	18,2
C41Q, C41Y C48Q, C48Y C59Q, C59Y C66Q, C66Y	400	670	300	20	300	610	9	51,4

Dimensiones

ATS 48C79 • …M12 •

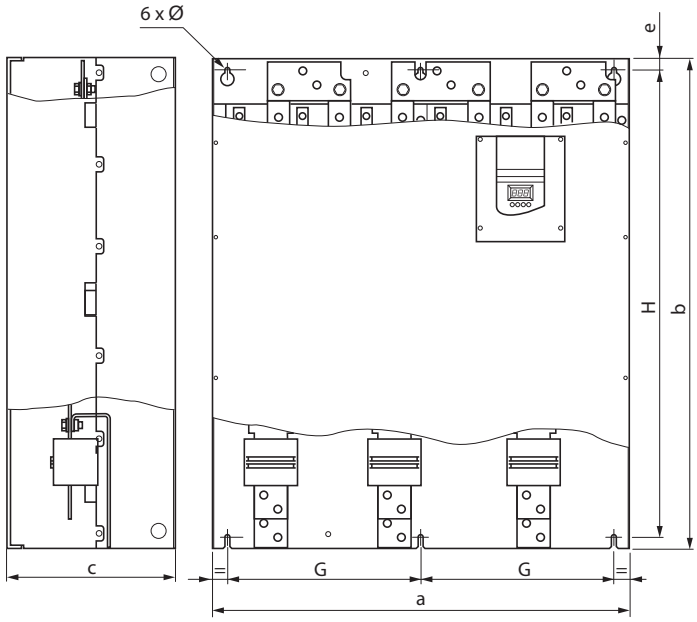

ATS 48	a mm	b mm	c mm	e mm	G mm	H mm	Ø mm	Peso kg
C79Q, C79Y M10Q, M10Y M12Q, M12Y	770	890	315	20	350	850	11	115

Precauciones de instalación

Instale el aparato en posición vertical, a ± 10°.

Evite colocarlo cerca de elementos que irradien calor, especialmente cuando éstos estén por debajo.

Deje espacio libre suficiente para garantizar la circulación del aire necesario para el enfriamiento, que se realiza por ventilación de abajo hacia arriba.

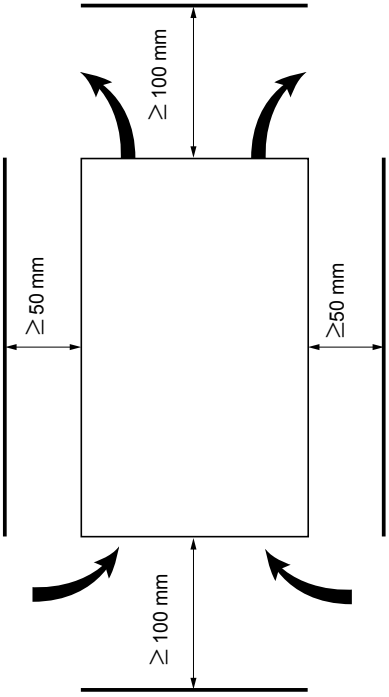

Asegúrese de que los líquidos, el polvo o los objetos conductores no caigan dentro del arrancador (grado de protección IP00 por la parte superior)

ESPAÑOL

Ventilación del arrancador

En los calibres provistos de un ventilador de refrigeración, éste se alimenta automáticamente en cuanto la temperatura del radiador alcanza 50 °C y pasa a fuera de tensión cuando la temperatura vuelve a bajar a 40°C.

Caudal de los ventiladores:

ATS 48 D32 • y D38 • : 14 m^3/hora
ATS 48 D47 • : 28 m^3/hora
ATS 48 D62 • a C11 • : 86 m^3/hora
ATS 48 C14 • y C17 • : 138 m^3/hora
ATS 48 C21 • a C32 • : 280 m^3/hora
ATS 48 C41 • a C66 • : 600 m^3/hora
ATS 48 C79 • a M12 • : 1.200 m^3/hora

Montaje en cofre o en armario

Cofre o armario metálico con grado de protección IP23

Respete las precauciones de montaje que se indican en la página anterior.

Con el fin de asegurar la buena circulación de aire en el arrancador:

- Prevea rejillas de ventilación
- Asegúrese de que la ventilación es suficiente. En caso contrario, instale una ventilación forzada con filtro si fuera necesario.

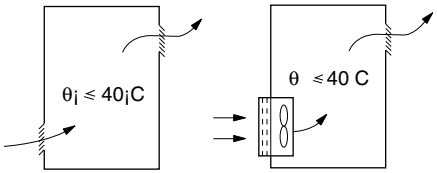

Potencia disipada por los arrancadores (sin by-pass) a su corriente nominal

Referencia del arrancador ATS 48	Potencia en W	Referencia del arrancador ATS 48	Potencia en W
D17Q, D17Y	59	C21Q, C21Y	580
D22Q, D22Y	74	C25Q, C25Y	695
D32Q, D32Y	104	C32Q, C32Y	902
D38Q, D38Y	116	C41Q, C41Y	1339
D47Q, D47Y	142	C48Q, C48Y	1386
D62Q, D62Y	201	C59Q, C59Y	1731
D75Q, D75Y	245	C66Q, C66Y	1958
D88Q, D88Y	290	C79Q, C79Y	2537
C11Q, C11Y	322	M10Q, M10Y	2865
C14Q, C14Y	391	M12Q, M12Y	3497
C17Q, C17Y	479		

Atención: Cuando los arrancadores están by-paseados, su potencia disipada es irrelevante (entre 15 y 30 W).

- Control del consumo (todos los calibres): 25 W sin ventilación
- Control del consumo con ventiladores en marcha:

Arranque progresivo	Consumo de potencia (W)	Potencia aparente (VA)
ATS 48D17● to C17●	30	80
ATS 48C21● to C32●	50	130
ATS 48C41● to M12●	80	240

ESPAÑOL

Borneros de potencia

Bornas	Funciones	Capacidad máxima de conexión Par de ajuste de las bornas					
		ATS 48 D17 • D22 • D32 • D38 • D47 •	ATS 48 D62 • D75 • D88 • C11 •	ATS 48 C14 • C17 •	ATS 48 C21 • C25 • C32 •	ATS 48 C41 • C48 • C59 • C66 •	ATS 48 C79 • M10 • M12 •
⏚	Tomas de tierra conectadas a tierra	10 mm^2 1,7 N.m	16 mm^2 3 N.m	120 mm^2 27 N.m	120 mm^2 27 N.m	240 mm^2 27 N.m	2 x 240 mm^2 27 N.m
		8 AWG 15 lb.in	4 AWG 26 lb.in	Barra de bus 238 lb.in	Barra de bus 238 lb.in	Barra de bus 238 lb.in	Barra de bus 238 lb.in
1/L1 3/L2 5/L3	Alimentación de potencia	16 mm^2 3 N.m	50 mm^2 10 N.m	95 mm^2 34 N.m	240 mm^2 34 N.m	2 x 240 mm^2 57 N.m	4 x 240 mm^2 57 N.m
		8 AWG 26 lb.in	2/0 AWG 88 lb.in	2/0 AWG 300 lb.in	Barra de bus 300 lb.in	Barra de bus 500 lb.in	Barra de bus 500 lb.in
2/T1 4/T2 6/T3	Salidas hacia el motor	16 mm^2 3 N.m	50 mm^2 10 N.m	95 mm^2 34 N.m	240 mm^2 34 N.m	2 x 240 mm^2 57 N.m	4 x 240 mm^2 57 N.m
		8 AWG 26 lb.in	2/0 AWG 88 lb.in	2/0 AWG 300 lb.in	Barra de bus 300 lb.in	Barra de bus 500 lb.in	Barra de bus 500 lb.in
A2 B2 C2	Corto-circuito del arrancador	16 mm^2 3 N.m	50 mm^2 10 N.m	95 mm^2 34 N.m	240 mm^2 34 N.m	2 x 240 mm^2 57 N.m	4 x 240 mm^2 57 N.m
		8 AWG 26 lb.in	2/0 AWG 88 lb.in	2/0 AWG 300 lb.in	Barra de bus 300 lb.in	Barra de bus 500 lb.in	Barra de bus 500 lb.in

Disposición de las bornas de potencia, ATS 48D17 • a C11 •

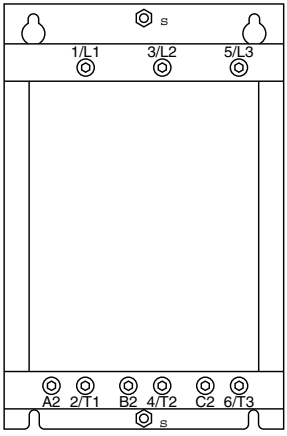

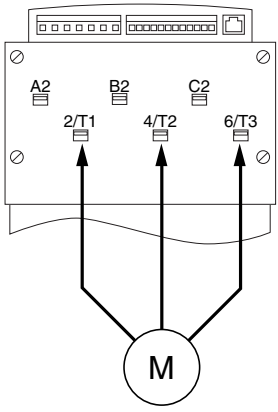

Motor para conectar a 2/T1, 4/T2, 6/T3

Disposición de las bornas de potencia, ATS 48C14 • y C17 •

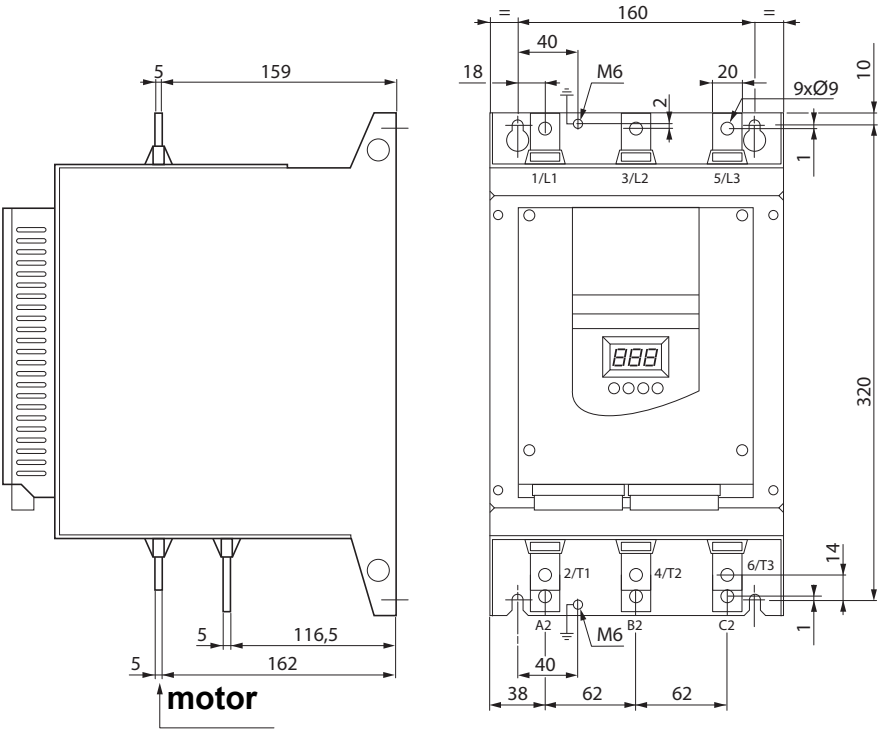

Disposición de las bornas de potencia, ATS 48C21 • a C32 •

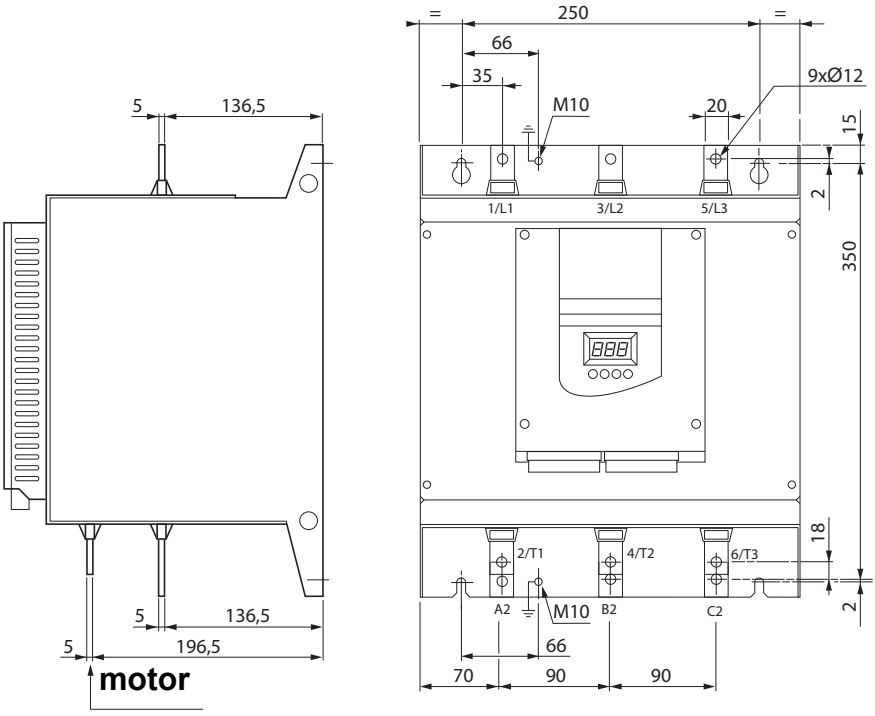

Disposición de las bornas de potencia, ATS 48C41 • a C66 •

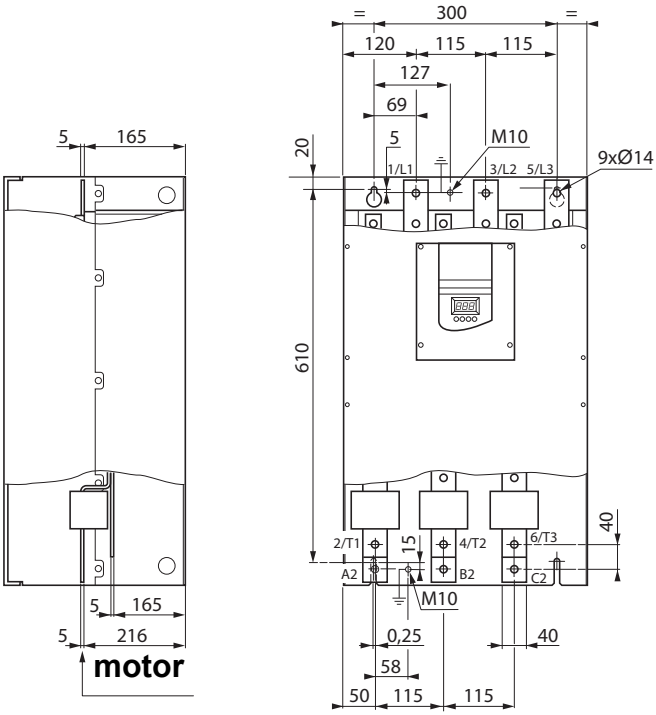

Disposición de las bornas de potencia, ATS 48C79 • a M12 •

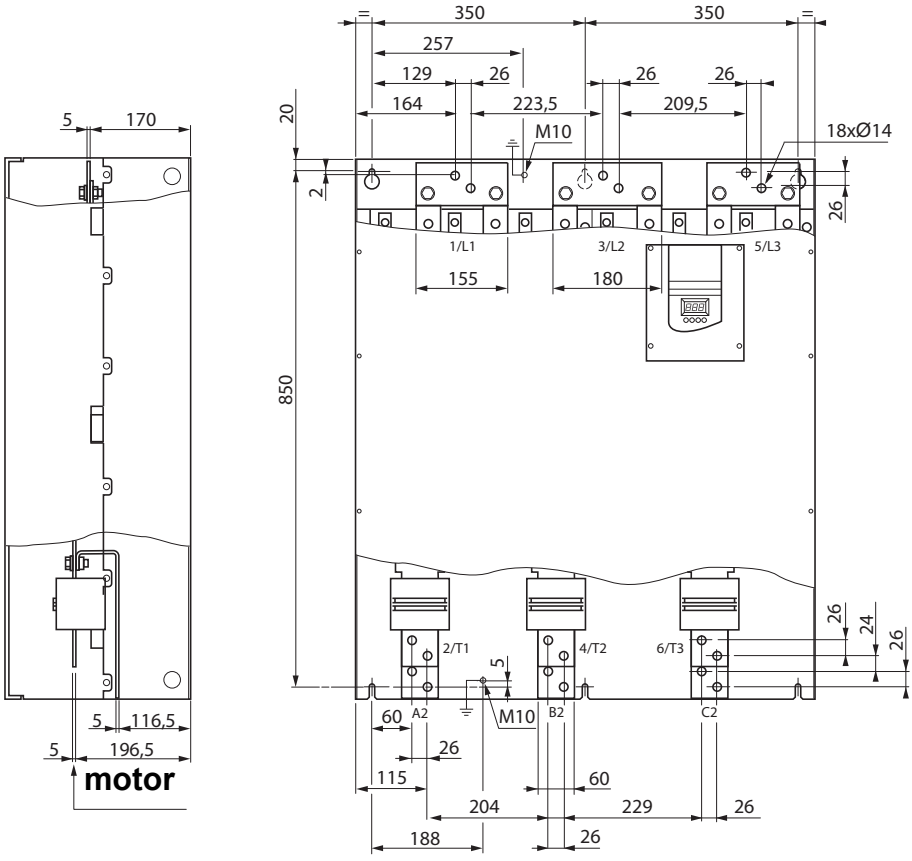

Borneros de control

Los borneros de control están provistos de conectores desconectables con decodificador.

Capacidad máxima de conexión : 2,5 mm2 (12 AWG)
Par de ajuste máximo : 0,4 N.m (3,5 lb.in)

En los arrancadores ATS 48C17 • a M12 •, para acceder a los borneros de control es necesario retirar la tapa de protección.

Características eléctricas

Bornas	Función	Características
CL1 CL2	Alimentación del control del Altistart	ATS 48 • • • Q: 220 a 415 V + 10% - 15%, 50 / 60 Hz ATS 48 • • • Y: 110 a 230 V + 10% - 15%, 50 / 60 Hz Consumo véase la página 269.
R1A R1C	Contacto (NA) del relé programable r1	Poder de conmutación mín. : • 10 mA para 6 V ⎓ Poder de conmutación máx. en carga inductiva (cos φ = 0,5 y L/R = 20 ms): • 1,8 A para 230 V ⎓ y 30 V ∿ Tensión máx. 400 V
R2A R2C	Contacto (NA) del relé de final de arranque r2	
R3A R3C	Contacto (NA) del relé programable r3	
STOP RUN LI3 LI4	Parada del arrancador (estado 0 = parada) Marcha del arrancador (estado 1 = marcha si STOP en estado 1) Entrada programable Entrada programable	4 entradas lógicas de 24 V con impedancia de 4,3 kΩ Umáx = 30 V, Imáx = 8 mA estado 1: U > 11 V - I > 5 mA estado 0: U < 5 V - I < 2 mA
24V	Alimentación de las entradas lógicas	+24V ± 25% aislada y protegida contra los by-pass y las sobrecargas; consumo máximo: 200 mA
LO+	Alimentación de las salidas lógicas	Para conectar al 24 V o a una fuente externa
LO1 LO2	Salidas lógicas programables	2 salidas de colector abierto, compatibles con autómatas de nivel 1, norma IEC 65A-68 • Alimentación +24 V (mín. 12 V máx. 30 V) • Corriente máx. de 200 mA por salida con una fuente externa
AO1	Salida analógica programable	Salida configurable a 0 - 20 mA o 4 - 20 mA • precisión ± 5% del valor máx., impedancia de carga máx. 500 Ω
COM	Común de las entradas/salidas	0 V
PTC1 PTC2	Entrada para sondas PTC	Resistencia total del circuito de la sonda 750 Ω a 25 °C (3 sondas de 250 Ω en serie, por ejemplo)
(RJ 45)	Toma para • terminal remoto • Power Suite • bus de comunicación	RS 485 Modbus

Disposición de las bornas de control

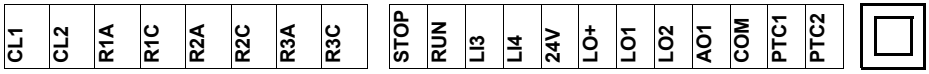

(RJ 45)

Precauciones de cableado

Potencia

Respete las secciones de los cables recomendadas por las normas.

El arrancador debe conectarse obligatoriamente a tierra para cumplir con las normas relativas a las corrientes de fuga. Cuando la normativa exija la instalación de una protección de cabecera de “dispositivo diferencial residual”, debe utilizarse un dispositivo de tipo A-Si (evita las activaciones inesperadas en la puesta en tensión). Compruebe la compatibilidad con los demás aparatos de protección. Si la instalación incluye más de un arrancador en la misma línea, conecte cada arrancador a tierra. En caso de que sea necesario, prevea una inductancia de línea (consulte el catálogo).

Aleje los cables de potencia de los circuitos con señales de bajo nivel de la instalación (detectores, autómatas programables, aparatos de medida, vídeo, teléfono).

Control

Separe los circuitos de control y los cables de potencia.

Funciones de las entradas lógicas RUN y STOP (Véase el esquema de aplicación véase la página 278)

Control 2 hilos

La marcha y la parada se controlan por el estado 1 (marcha) o 0 (parada), que se tiene en cuenta en las entradas RUN y STOP al mismo tiempo.

Cuando se produce una puesta en tensión o una reinicialización de fallo manual, el motor arranca de nuevo si está presente la orden RUN.

Control 3 hilos

La marcha y la parada están controladas por 2 entradas lógicas diferentes.
La parada se produce con la apertura (estado 0) de la entrada STOP.
El impulso en la entrada RUN permanece en la memoria hasta la apertura de la entrada STOP.

Cuando se produce una puesta en tensión o una reinicialización de fallo manual o tras una orden de parada, sólo se puede alimentar el motor una vez realizada una apertura previa (estado 0) y a continuación un nuevo impulso (estado 1) de la entrada RUN.

Esquema de aplicación

ATS 48: 1 sentido de marcha con contactor de línea, parada en rueda libre, coordinación de tipo 1

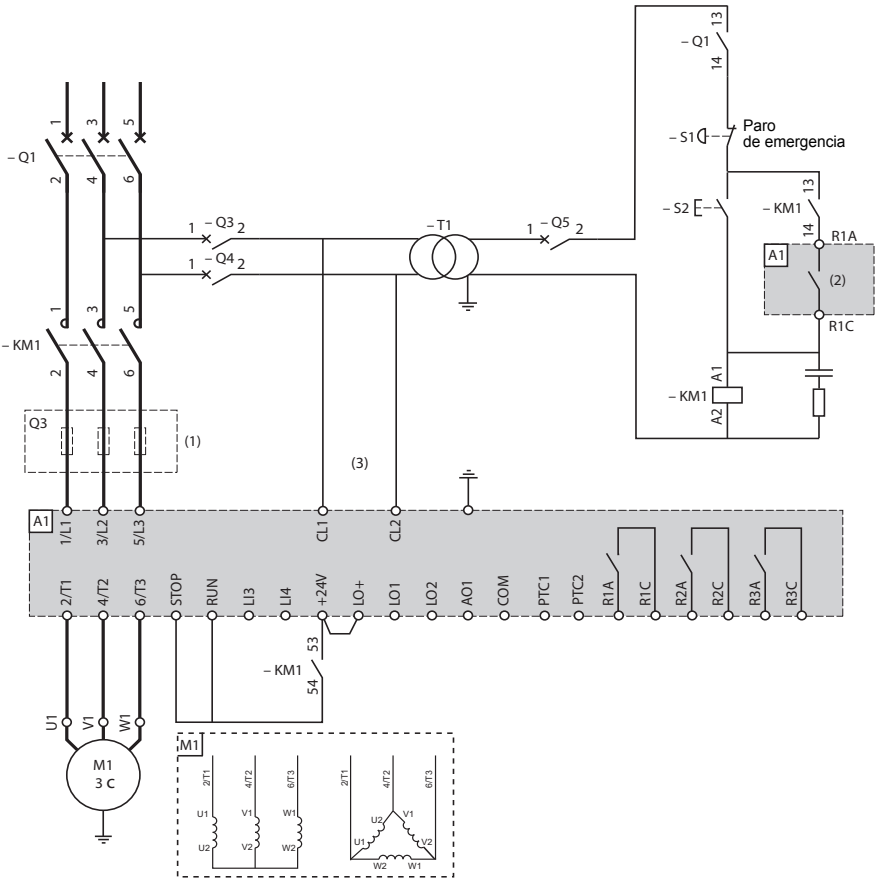

(1)Colocación de fusibles ultrarrápidos en caso de coordinación de tipo 2 (según IEC 60 947-4-2).
(2)Asignación del relé R1: relé de aislamiento (r1I). Véase “Características eléctricas”, página 275. Atención a los límites de empleo del contacto, relevar para los contactores de gran calibre.
(3)Insertar un transformador cuando la tensión de la red sea diferente a la admitida por el control del ATS 48. Véase “Características eléctricas”, página 275.

ESPAÑOL

ATS 48: 1 sentido de marcha con contactor de línea, by-pass, parada libre o controlada, coordinación de tipo 1

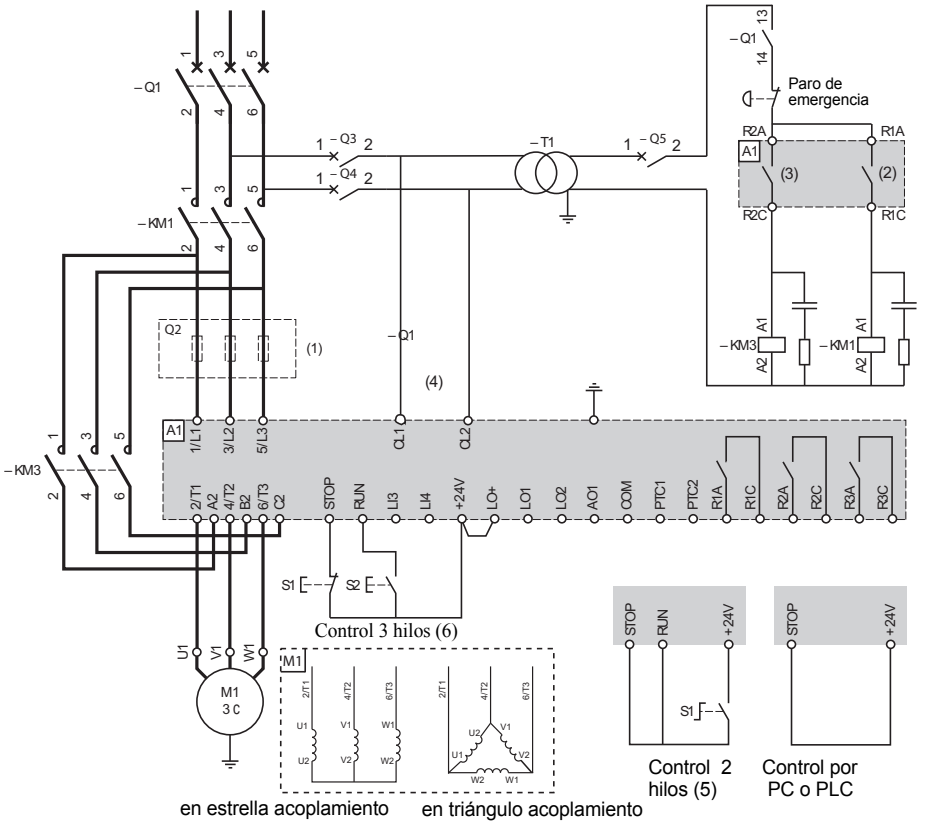

(1)Colocación de fusibles ultrarrápidos en caso de coordinación de tipo 2 (según IEC 60 947-4-2).
(2)Asignación del relé R1: relé de aislamiento (r1I). Atención a los límites de empleo del contacto, relevar para los contactores de gran calibre. Véase “Características eléctricas”, página 275.
(3)Atención a los límites de empleo del contacto, relevar para los contactores de gran calibre. Véase “Características eléctricas”, página 275.
(4)Insertar un transformador cuando la tensión de la red sea diferente a la admitida por el control del ATS 48. Véase “Características eléctricas”, página 275.
(5)Véase “Control 2 hilos”, página 276.
(6)Véase “Control 3 hilos”, página 276.

ESPAÑOL

ATS 48: 1 sentido de marcha, parada libre, coordinación de tipo 1, con contactor de línea, by-pass, acoplamiento en el triángulo del motor, ATS48•••Q o ATS48•••YS 316.

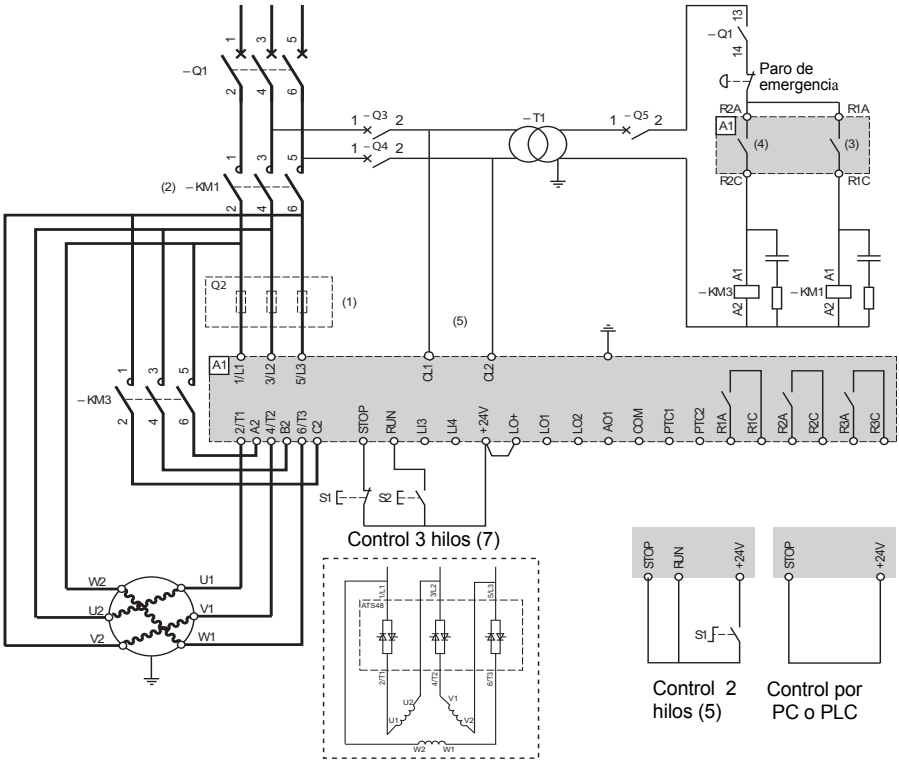

Acoplamiento en el devanado del triángulo del motor

Nota: Ajustar d lt para on (Consulte **"Menú Ajustes avanzados drC", página 304**)

(1)Colocación de fusibles ultrarrápidos en caso de coordinación de tipo 2 (según IEC 60 947-4-2).

(2)Utilización de KM1 obligatoria. Prever una protección térmica diferencial externa type Vigirex pour Compact NS80, bloc Vigi pour Compac NS 400 à 630, consulter la catalogue Merlin Gérin pour les calibres supérieurs.

(3)Asignación del relé R1: relé de aislamiento (r1I). Atención a los límites de empleo del contacto, relevar para los contactores de gran calibre. Véase "Características eléctricas", página 275.

(4)Atención a los límites de empleo del contacto, relevar para los contactores de gran calibre. Véase "Características eléctricas", página 275.

(5)Insertar un transformador cuando la tensión de la red sea diferente a la admitida por el control del ATS 48. Véase "Características eléctricas", página 275.

(6)Véase "Control 2 hilos", página 276.

(7)Véase "Control 3 hilos", página 276.

(8)Inductances de ligne éventuelles

Cuando se utiliza el contactor de by-pass, la detección del fallo "PHF" se puede alargar

ATS 48: 1 sentido de marcha, parada libre o controlada, contactor de línea, by-pass del motor, PV/GV con dos juegos de parámetros

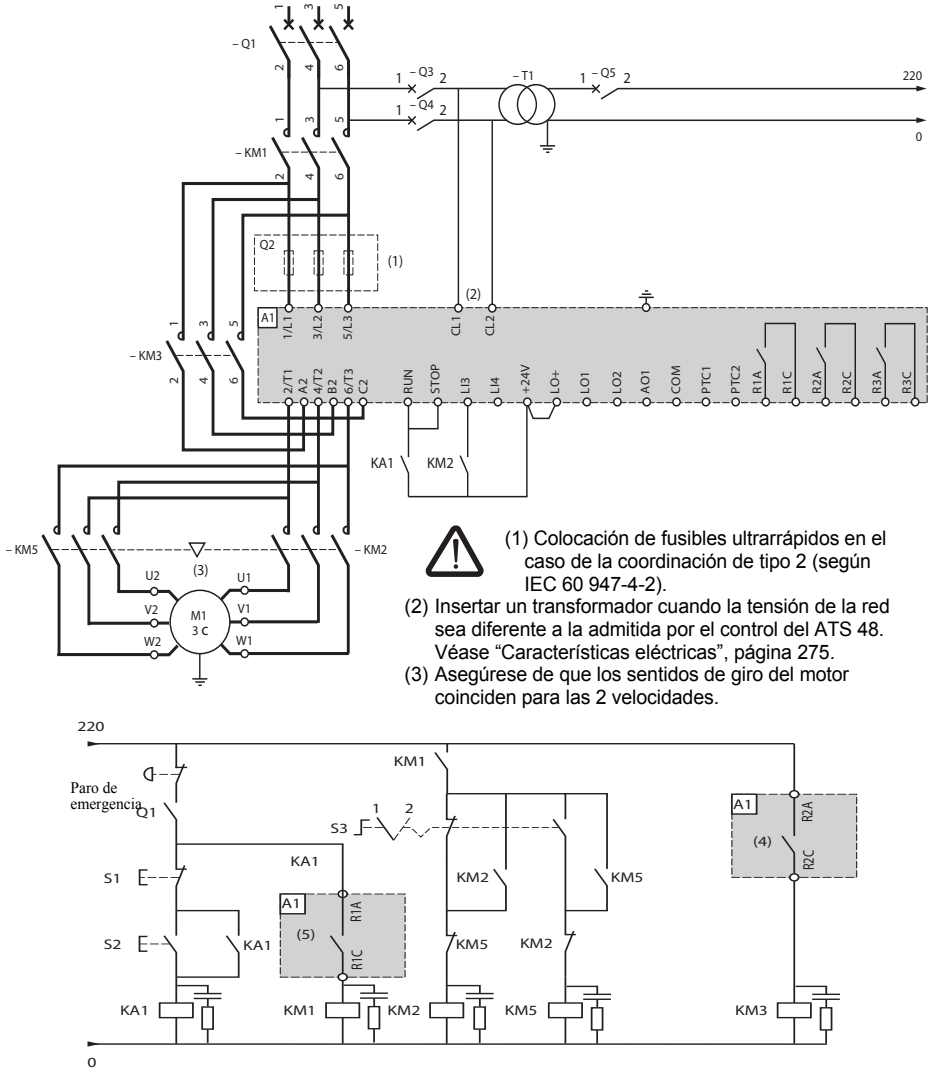

(1) Colocación de fusibles ultrarrápidos en el caso de la coordinación de tipo 2 (según IEC 60 947-4-2).

(2) Insertar un transformador cuando la tensión de la red sea diferente a la admitida por el control del ATS 48. Véase “Características eléctricas”, página 275.

(3) Asegúrese de que los sentidos de giro del motor coinciden para las 2 velocidades.

(4) Atención a los límites de empleo del contacto, relevar para los contactores de gran calibre. Véase “Características eléctricas”, página 275.

(5) Asignación del relé R1: relé de aislamiento (r1I). Atención a los límites de empleo del contacto, relevar para los contactores de gran calibre. Véase “Características eléctricas”, página 275.
LI3 = LIS (segundo juego de parámetros del motor)
S3: 1 = PV, 2 = GV

ATS 48: 1 sentido de marcha con contactor de línea, arranque y ralentización de varios motores en cascada con un solo Altistart

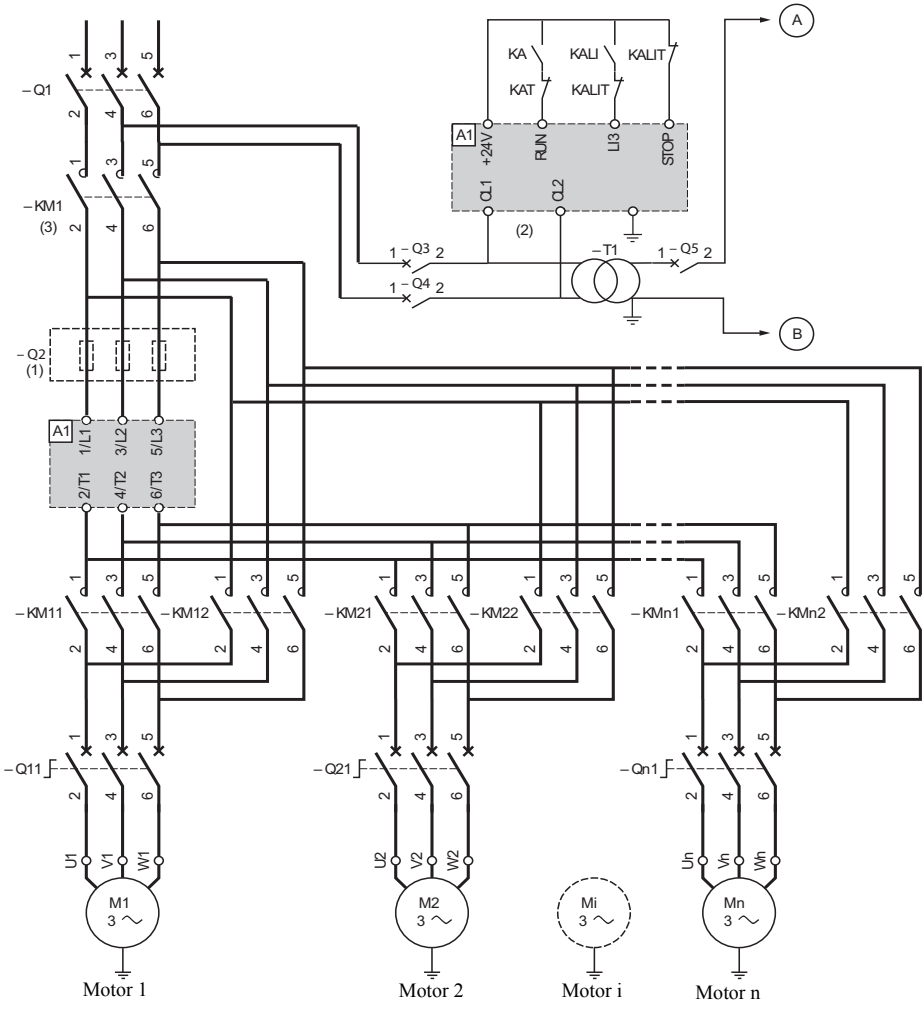

(1) Colocación de fusibles en caso de la coordinación de tipo 2 (según IEC 60 947-4-2).
(2) Insertar un transformador cuando la tensión de la red sea diferente a la admitida por el control del ATS 48. Véase “Características eléctricas”, página 275.
(3) KM1 debe dimensionarse en función de la potencia total de los motores.

Importante:
- Es preciso configurar una entrada lógica del ATS48 “en cascada” (LI3 = LIC). Véase “Activación de la función de cascada”, página 306.
- En caso de fallo, no es posible ralentizar ni frenar los motores en servicio.
- Ajustar la protección térmica de cada disyuntor Qn1 a la corriente nominal del motor.

Esquema de aplicación

ATS 48: 1 sentido de marcha con contactor de línea, arranque y ralentización de varios motores en cascada con un solo Altistart

Control motor 1

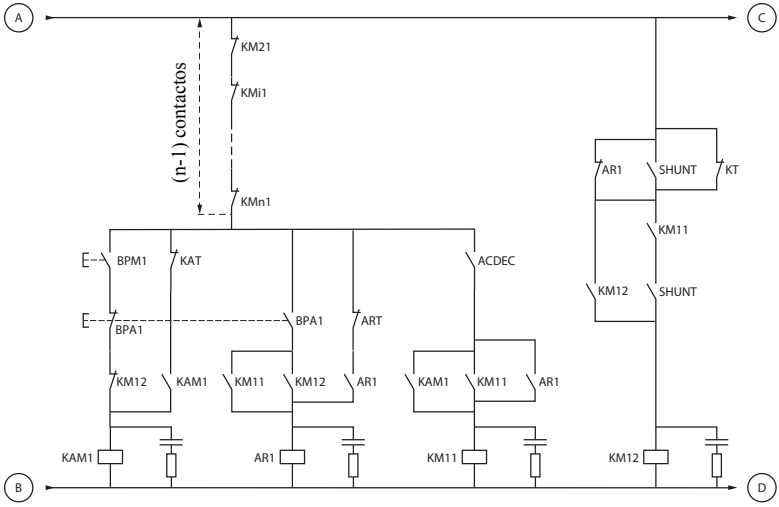

Control motor 2

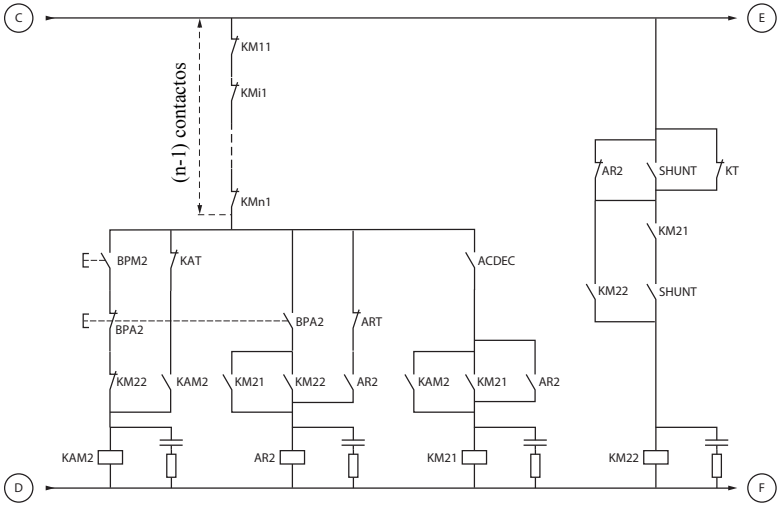

BPM1: botón “Marcha” motor 1
BPM2: botón “Marcha” motor 2

BPA1: botón “Parada” motor 1
BPA2: botón “Parada” motor 2

Esquema de aplicación

ATS 48: 1 sentido de marcha con contactor de línea, arranque y ralentización de varios motores en cascada con un solo Altistart

Control motor n

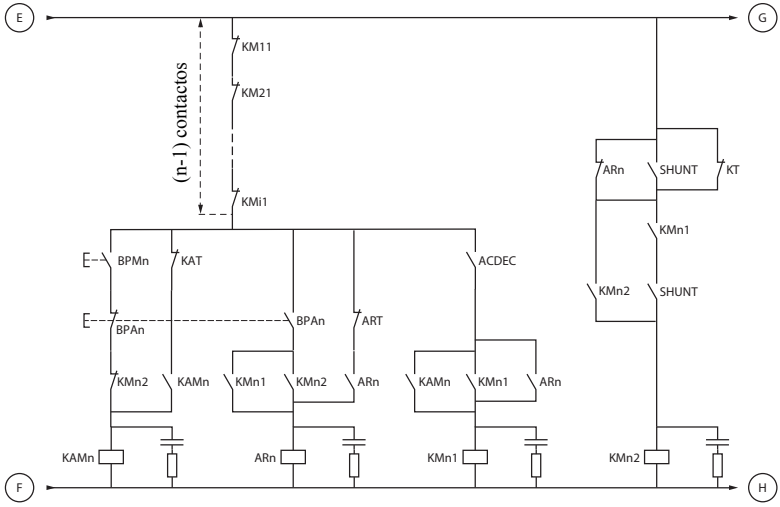

Control cascada

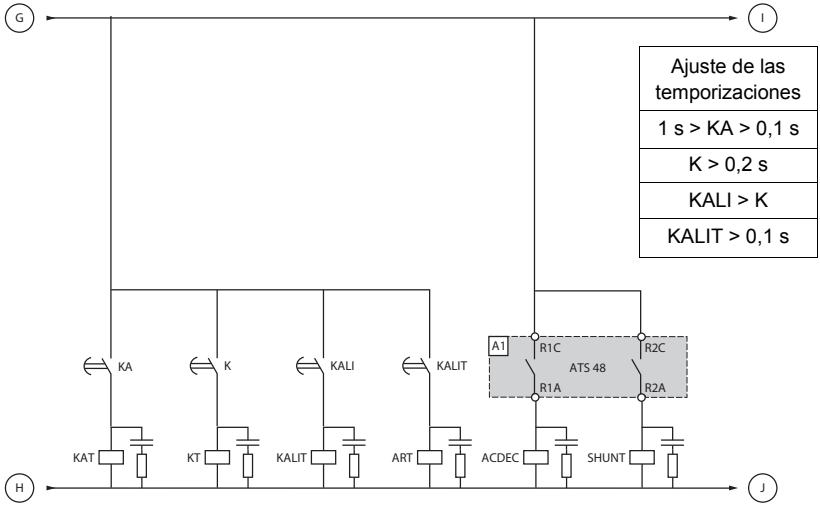

Ajuste de las temporizaciones
1 s > KA > 0,1 s
K > 0,2 s
KALI > K
KALIT > 0,1 s

BPMn: botón “Marcha” motor n
BPAn: botón “Parada” motor n

R1 debe configurarse como relé de aislamiento (r1 = r1I)

Entre dos ordenes de parada consecutivas, esperar al fin de la temporización KALIT

ESPAÑOL

ATS 48: 1 sentido de marcha con contactor de línea, arranque y ralentización de varios motores en cascada con un solo Altistart

Control cascada

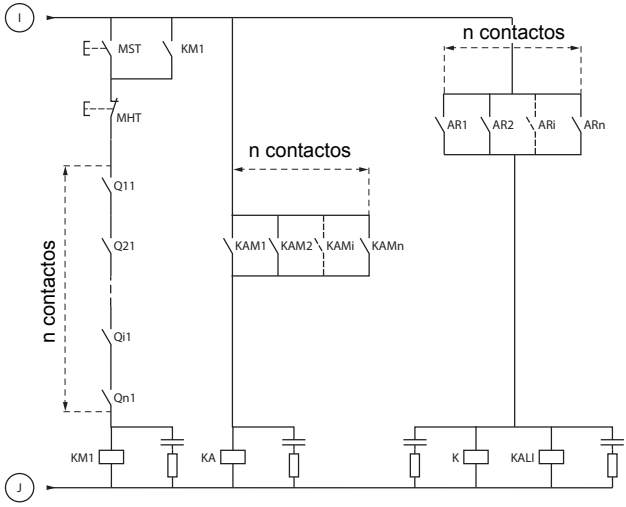

MST: botón “Marcha” general
MHT: botón “Parada” general

ATS 48: 1 sentido de marcha con contactor de línea, arranque y ralentización de varios motores en cascada con un solo Altistart

Explicación de la secuencia completa

Arranque con MST para hacer subir KM1 (contactor de línea)

1 - 2 - 3

Pulsar BPM1 para arrancar el motor 1. Para arrancar el motor 2, pulsar BPM2; pulsar BPMn para arrancar el motor n.
Cuando se acciona BPM1, KAM1 cierra y KM11 también porque ACDEC está cerrado (el ATS48 está en tensión con MST y KM1).
KA cierra porque KAM1 está cerrado. Después de un tiempo que se puede ajustar, KAT también cierra.

4 - 5

El ATS48 arranca el motor porque se ha producido una orden de marcha en RUN con KA y KAT.
KAM1 vuelve a caer por KAT.
KM11 permanece cerrado.

6 - 7

Al final del arranque, R2 del ATS48 cierra, SHUNT está cerrado, KM12 está cerrado por SHUNT y KM11 permanece cerrado.

8 - 9

Después de un breve instante, R2 vuelve a caer y R1 también (función de by-pass del arrancador).
KM11 se abre porque ACDEC está abierto.
El motor sigue alimentado por KM12.
ATS48 muestra un código de estado.

Para arrancar otro motor, se respetará la misma lógica. Para arrancar el motor n, utilice BPMn y para detener el motor n, utilice BPAn. Es posible arrancar y parar cualquier motor en cualquier orden.

Para parar el motor 1, pulse BPA1. AR1 se cierra

a - b - c - d

K y KALI están cerrados.
LI del ATS48 recibe una orden de KALI y KALIT (LI debe ajustarse al valor LIC).
R1 y R2 del ATS48 cierran (un impulso en R2 y R1 permanece cerrado hasta la parada completa del motor).

e

KM11 se cierra.
Después de un período que se puede ajustar, KT y KALIT suben.

f

El ATS48 recibe una orden de parada por KALIT.

g

KM12 vuelve a caer.
El ATS48 ralentiza el motor.

h

R1 del ATS48 se abre cuando el motor está totalmente parado.

i

KM11 se abre.
El ATS48 está listo para arrancar o parar otro motor.

ATS 48: 1 sentido de marcha con contactor de línea, arranque y ralentización de varios motores en cascada con un solo Altistart

Cronograma

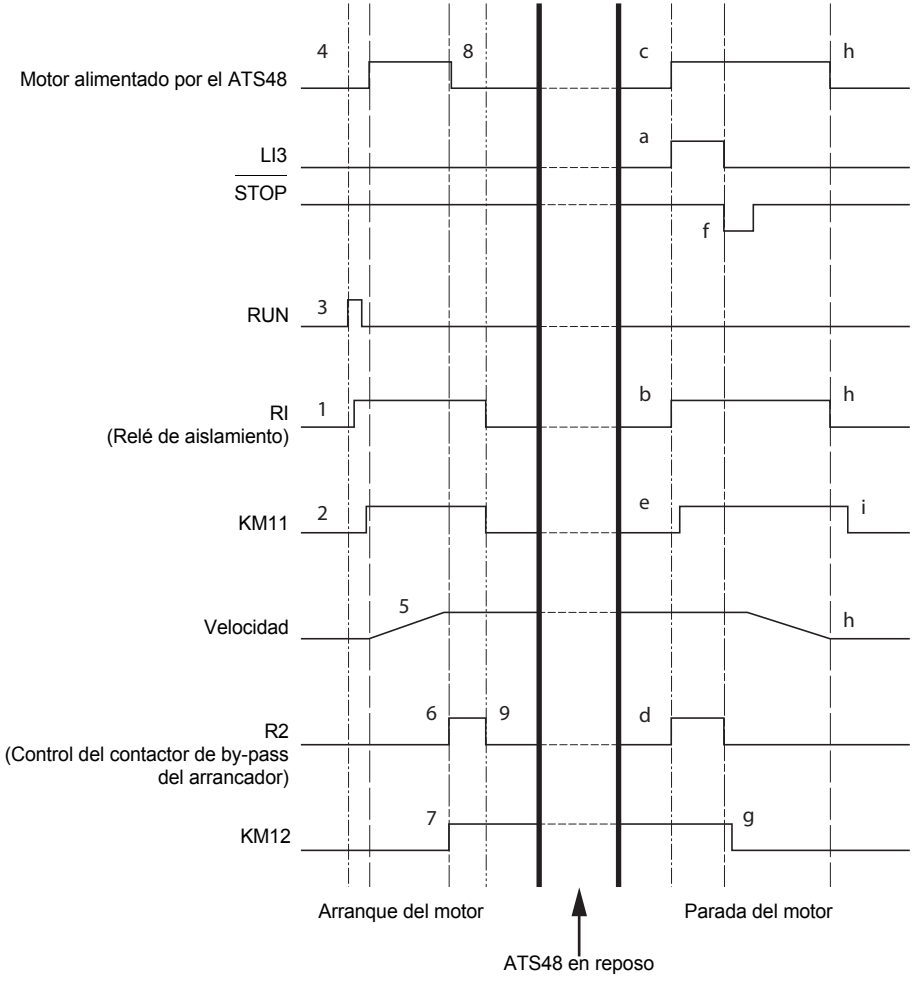

Protecciones térmicas

Protección térmica del arrancador

Protección térmica por sonda CTP fijada al radiador y calculando el calentamiento de los tiristores.

Protección térmica del motor

El arrancador calcula permanentemente el calentamiento del motor a partir de la corriente nominal ajustada In y la corriente realmente absorbida.

Los calentamientos pueden deberse a una sobrecarga débil o fuerte, de larga o corta duración.
Las curvas de disparo de las páginas siguientes se establecen en función de la relación entre la corriente de arranque Id y la corriente del motor (ajustable) In.

La norma IEC60947-4-2 define las clases de protección que proporcionan las capacidades de arranque del motor en frío y en caliente sin fallo térmico. Las diferentes clases de protección se indican para un estado FRÍO (corresponde a un estado térmico del motor estabilizado, fuera de tensión) y para un estado CALIENTE (corresponde a un estado térmico del motor estabilizado, con potencia nominal).

En la salida de fábrica, el arrancador tiene una clase de protección 10.
Esta clase de protección se puede modificar a partir del menú PrO.

La protección térmica que muestra el arrancador corresponde a la constante de tiempo fer.
- Una alarma de sobrecarga que avisa si el motor supera su umbral de calentamiento nominal (estado térmico del motor = 110%).
- Un fallo térmico que detiene el motor en caso de superarse el umbral crítico de calentamiento (estado térmico del motor = 125%).

En el caso de un arranque prolongado, el arrancador puede dispararse por fallo o alarma térmica a pesar de que el valor mostrado sea inferior al valor de disparo.

El fallo térmico puede señalarse mediante el relé R1 si no se ha inhibido la protección térmica.

Después de una parada del motor o de quitar tensión al arrancador, el cálculo del estado térmico continúa, aunque el control no esté alimentado. El control térmico del Altistart prohibe el rearranque del motor si su estado térmico es aún demasiado elevado.

En caso de emplearse un motor especial (a prueba de explosiones, sumergido, etc.), debe preverse una protección térmica por sondas PTC.

Protección térmica del motor

Curvas en frío

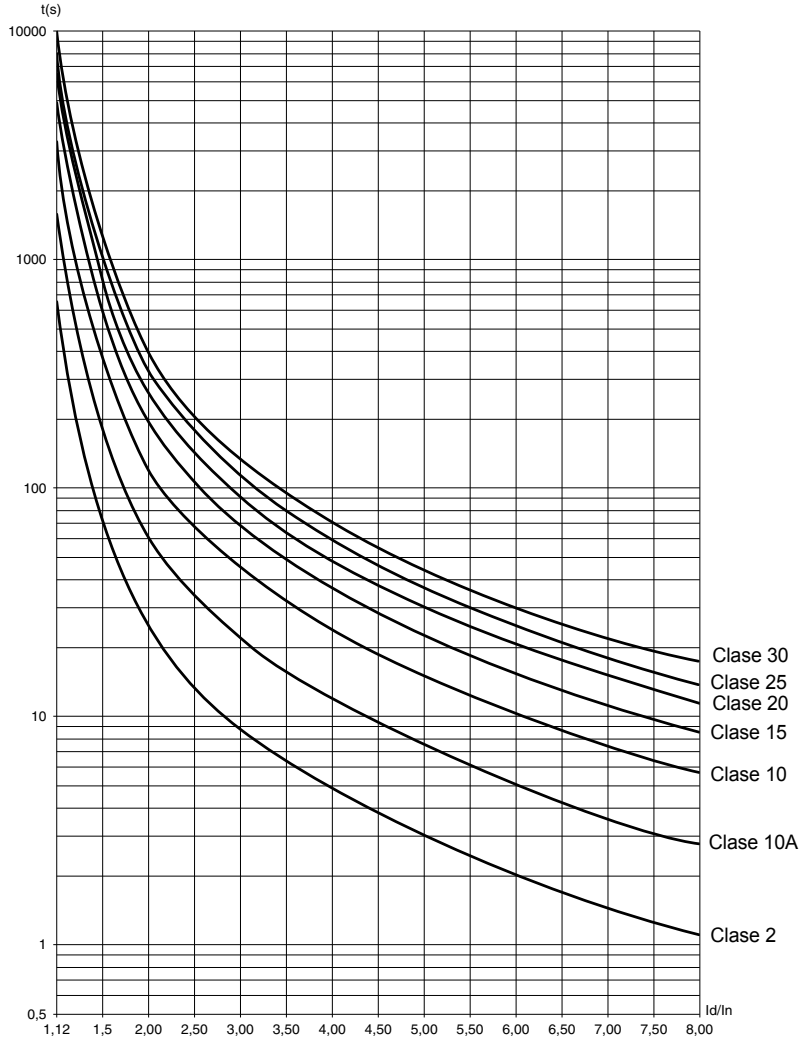

Tiempo de disparo para aplicación estándar (Clase 10)		Tiempo de disparo para aplicación severa (Clase 20)	
3 In	5 In	3,5 In	5 In
46 s	15 s	63 s	29 s

Protección térmica del motor

Curvas en caliente

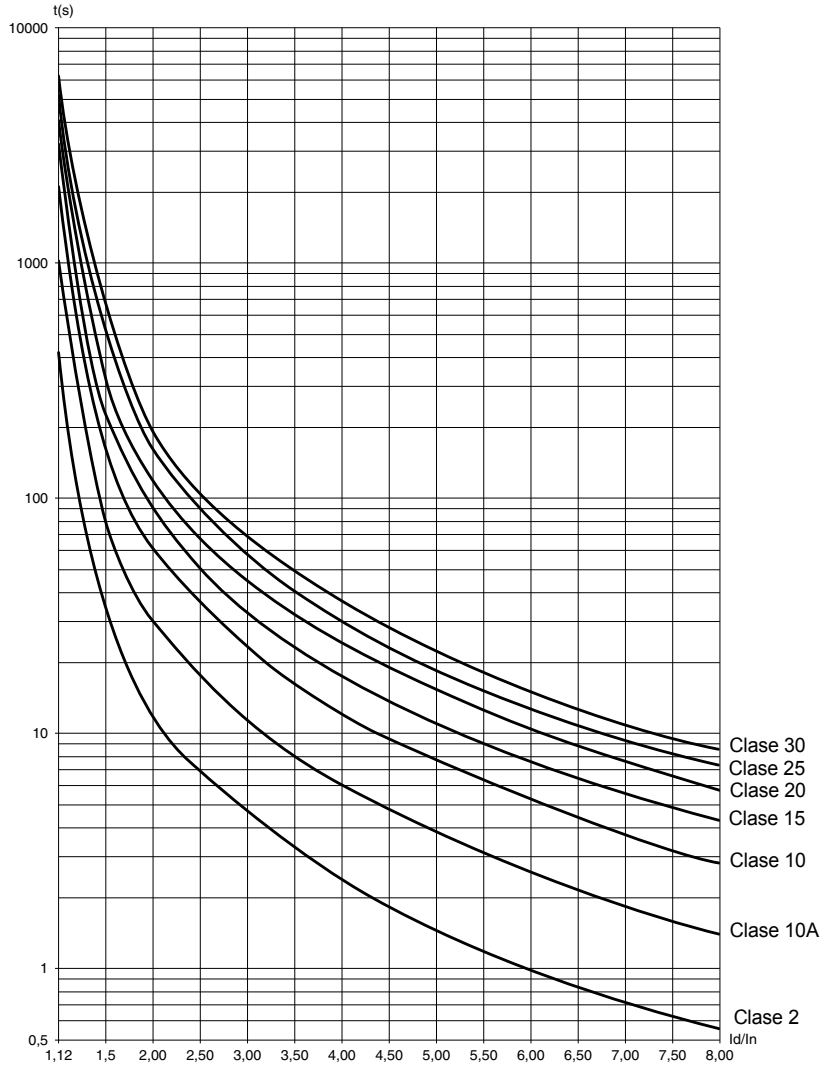

Tiempo de disparo para aplicación estándar (Clase 10)		Tiempo de disparo para aplicación severa (Clase 20)	
3 In	5 In	3,5 In	5 In
23 s	7,5 s	32 s	15 s

Protección térmica del motor por sondas PTC

Es posible conectar al bornero de la tarjeta de control sondas PTC integradas en el motor para medir su temperatura. El arrancador gestiona esta información analógica.

El tratamiento de la información “rebasamiento térmico de sonda PTC” puede utilizarse de dos formas:
- Parada por fallo cuando la señal está activa
- Alarma cuando la señal está activa. Esta alarma se puede ver en una palabra de estado del arrancador (enlace serie) o en una salida lógica configurable

Nota:
La protección por sondas PTC no desactiva la protección térmica del motor efectuada por cálculo: las 2 protecciones pueden existir al mismo tiempo.

Visualizador y programación

Funciones de las teclas y del visualizador

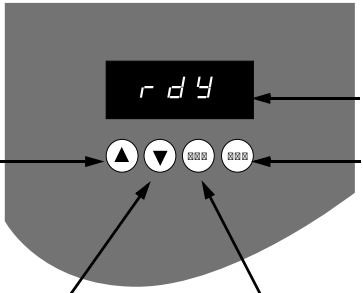

- 3 visualizadores de “7 segmentos”
- Para pasar al menú o al parámetro previo o para aumentar el valor mostrado
- Para entrar en un menú o en un parámetro o para registrar el parámetro o el valor mostrado
- Para pasar al menú o al parámetro siguiente o para disminuir el valor mostrado
- Para salir de un menú o un parámetro o para desechar el valor mostrado y volver al valor anterior grabado en la memoria

Al pulsar el botón (▲) o (▼) no se graba en memoria el valor elegido.

Grabación en memoria y registro de los valores mostrados: (ENT)

Al grabar un valor en la memoria, el visualizador parpadea.

Reglas de visualización

El principio de visualización de los números varía en función de la escala máxima del parámetro y su valor.

- Escala máx. 9990:
  - Valores 0,1 a 99,9 (ejemplos: 05.5 = 5,5 ; 55.0 = 55 ; 55.5 = 55,5)
  - Valores 100 a 999 (ejemplo: 555 = 555)
  - Valores 1000 a 9990 (ejemplo: 5.55 = 5550)
- Escala máx. 99900:
  - Valores 1 a 999 (ejemplos: 005 = 5 ; 055 = 55 ; 550 = 550)
  - Valores 1000 a 9990 (ejemplo: 5.55 = 5550)
  - Valores 10000 a 99900 (ejemplo: 55.5 = 55500)

Acceso a los menús

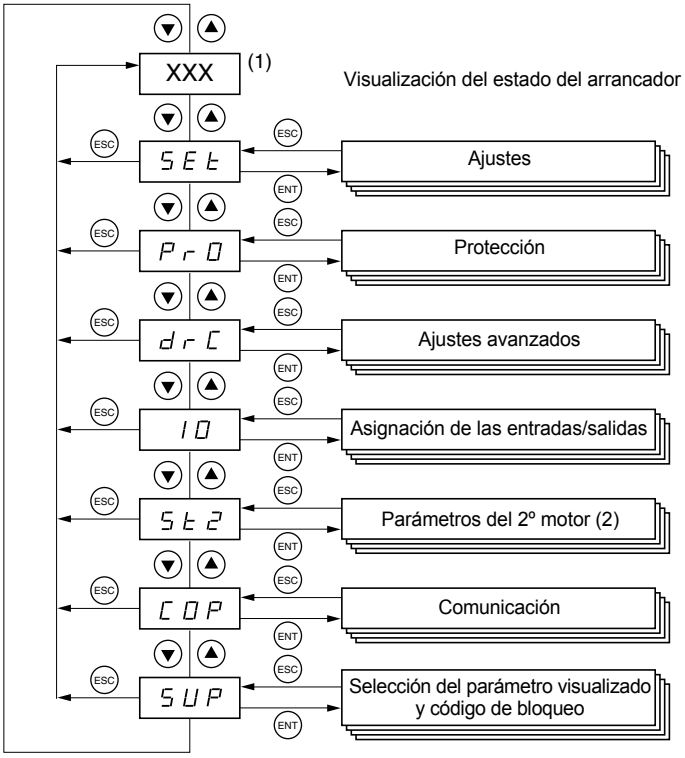

(1) La gestión del valor "XXX" mostrado se indica en la tabla que figura a continuación.
(2) El menú St2. sólo se puede ver si se ha configurado la función "segundo juego de parámetros del motor".

Acceso a los parámetros

Grabación en memoria y registro de los valores mostrados: (ENT)

Al grabar un valor en la memoria, el visualizador parpadea.

Ejemplo:

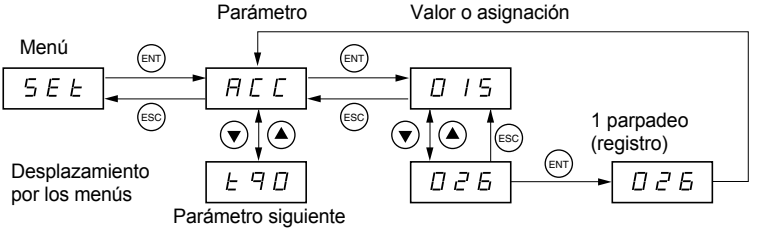

Visualización del estado del arrancador

El valor “XXX” mostrado sigue las reglas siguientes:

Valor mostrado	Condición
Código de fallo	Fallo en el arrancador
nLP rdY	Arrancador sin orden de marcha y: • Potencia no alimentada • Potencia alimentada
tbS	Temporización antes de arranque no transcurrida
HEA	Calentamiento del motor en curso
Parámetro de control elegido por el usuario (menú SUP). Ajuste de fábrica: corriente motor	Arrancador con orden de marcha
brL	Arrancador en frenado
Stb	Espera de una orden de control (RUN o STOP) en modo cascada

Cuando el arrancador está en limitación de corriente, el valor mostrado “XXX” parpadea.

Desde el momento en el que el arrancador presenta un fallo, muestra un código y sigue siendo posible modificar los parámetros.

Opción terminal remoto

El terminal remoto **VW3 G48101** se puede montar en la puerta del cofre o del armario; se suministra con una junta que permite un montaje con grado de estanqueidad IP65. Está provisto de un cable de 3 m de longitud con tomas y la comunicación se efectúa a través de la conexión RJ45 / modbus del arrancador (**véanse las instrucciones suministradas con el terminal**). Incluye la misma visualización y los mismos botones de programación que el Altistart 48, además de un conmutador de bloqueo de acceso a los menús.

Vista de la parte delantera:

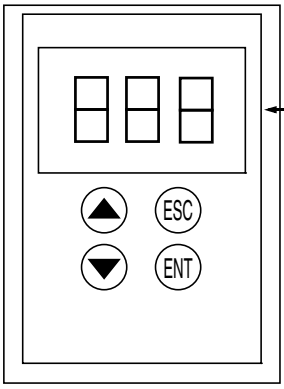

Vista de la parte trasera:

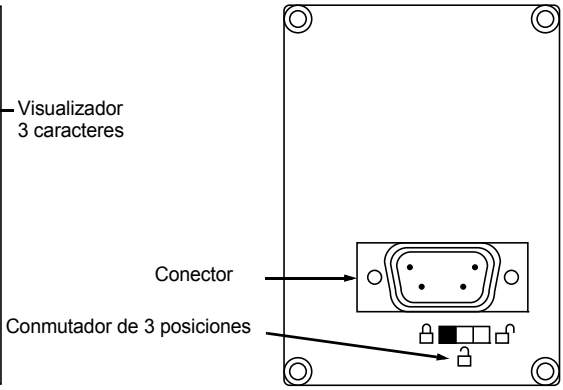

Gestión del conmutador del terminal remoto

El conmutador de 3 posiciones del terminal se utiliza como sigue:

- Posición bloqueada : sólo se puede acceder a los parámetros de control y no se puede modificar la selección del parámetro mostrado cuando el arrancador está en marcha.
- Posición semibloqueada : acceso limitado a los parámetros de los menús SEt, PrO y SUP.
- Posición desbloqueada : es posible acceder a todos los parámetros.

Las eventuales restricciones de visualización debidas al conmutador del terminal remoto siguen siendo aplicables al arrancador después de haberse desconectado, incluido después de quitar tensión al arrancador.

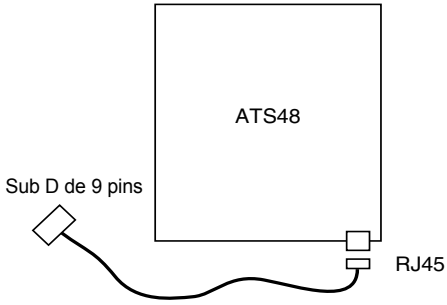

Menú Ajustes SEt

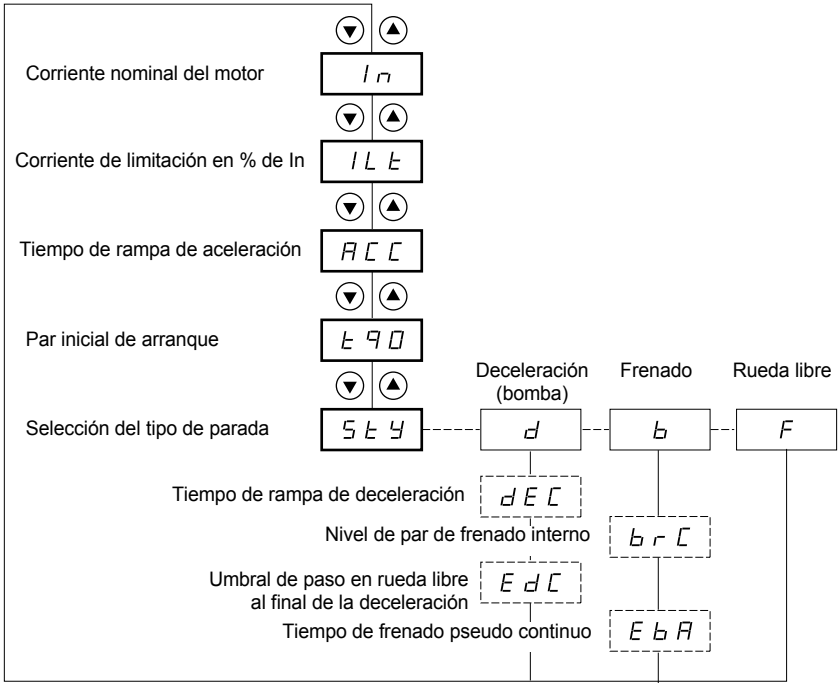

Parámetros en el menú

Selección posible

Parámetro que aparece según la selección

Para acceder a los parámetros, véase la página 292.

Los parámetros de ajuste sólo pueden modificarse con el motor parado.

Código	Descripción	Rango de ajuste	Ajuste de fábrica
In	**Corriente nominal del motor**	0,4 a 1,3 ICL	(1)
	Ajuste el valor de la corriente nominal del motor indicado en la placa de características, incluso en caso de acoplamiento del arrancador en el devanado del triángulo del motor (dLt en el menú PrO). Compruebe que esta corriente está comprendida entre 0,4 y 1,3 ICL (ICL: calibre del arrancador).		
ILt	**Corriente de limitación**	150 a 700% de In, limitado a 500% de ICL	400% de In
	La corriente de limitación ILt se expresa en % de In. Con la carga máxima, ILt se debe ajustar a un valor lo suficientemente alto como para permitir el arranque del motor. Si la aplicación requiere más de un 500% de IcL, se deberá sobredimensionar el arrancador. Está limitado al 500% de ICL (calibre del arrancador, véanse las tablas “Asociación arrancador - motor”, página 260. Corriente de limitación = ILt x In. Ejemplo 1: In = 22 A, ILt = 300%, corriente de limitación = 300% x 22 A = 66 A Ejemplo 2: ATS 48C21Q, con ICL = 210 A In = 195 A, ILt = 700%, corriente de limitación = 700% x 195 = 1365, limitado a 500% x 210 = 1.050 A		
ACC	**Tiempo de rampa de aceleración**	1 a 60 s	15 s
	Tiempo de crecimiento del par de arranque entre 0 y el par nominal Cn, es decir, la pendiente de la rampa de crecimiento de par. 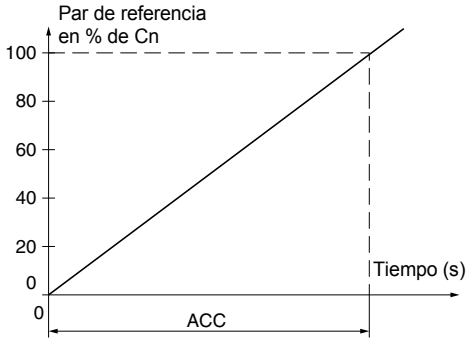 		

(1) Ajuste de fábrica de In correspondiente al valor usual de un motor normalizado de 4 polos en tensión 400 V y clase 10 (para ATS 48•••Q).
Ajuste de fábrica de In correspondiente al valor usual de un motor normalizado según NEC en tensión 460 V y clase 10 (para ATS 48•••Y).

Código	Descripción	Rango de ajuste	Ajuste de fábrica
tq0	**Par inicial de arranque**	0 a 100% de Cn	20%
	Ajuste del par inicial en las fases de arranque, varía de 0 a 100% del par nominal. El par de arranque inicial se debe ajustar a fin de producir el giro del motor tan pronto como se aplique la orden al motor. Si se ajusta a un valor demasiado bajo, el motor girará más tarde después de la señal "Run". 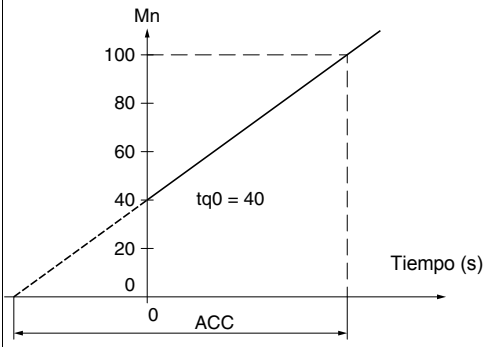 		
StY	**Selección del tipo de parada**	d-b-F	-F-
	Existen tres tipos de parada: **- d -**: Parada en deceleración por control de par. El arrancador aplica un par al motor con el fin de parar progresivamente según la rampa, evitando una parada en seco. Este tipo de parada permite reducir eficazmente los golpes de arriete en una bomba. **- b -**: Parada en frenado dinámico; el arrancador genera un par de frenado en el motor para garantizar la ralentización en caso de inercia importante. **- F -**: Parada en rueda libre, el arrancador no aplica ningún par al motor. **Nota** :Si el arrancador está conectado en el devanado del triángulo del motor, sólo la parada tipo F no está autorizada.		

Código	Descripción	Rango de ajuste	Ajuste de fábrica
dEC	**Tiempo de rampa de deceleración**	1 a 60 s	15 s
	Sólo se puede acceder a este parámetro si StY = -d-. Permite ajustar un intervalo de tiempo comprendido entre 1 y 60 s, para pasar del par estimado al par nulo (= pendiente de la rampa de reducción de par en una parada -d-). De esta forma se adapta la progresividad de la deceleración y se evitan choques hidráulicos en las aplicaciones de bombas, mediante la modificación de la pendiente de la referencia de par. 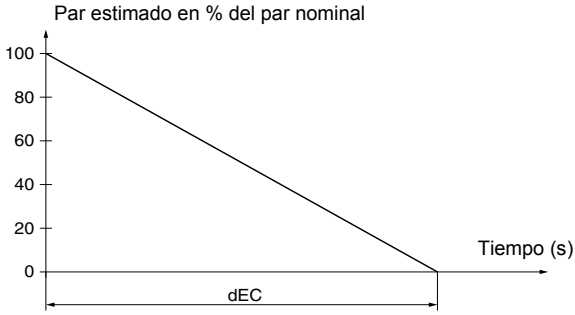 		
EdC	**Umbral de paso en rueda libre al final de la deceleración**	0 a 100%	20%
	Sólo se puede acceder a este parámetro si StY = -d- y si el parámetro CLP del menú accionamiento (drC) ha permanecido con el ajuste de fábrica (On). Permite ajustar el nivel del par final comprendido entre 0 y 100% del par estimado al principio de la deceleración. En las aplicaciones de tipo bomba, el control de la deceleración no se encuentra necesariamente por debajo de un nivel de carga ajustado por Edc. Si el par estimado al principio de la deceleración se encuentra por debajo de 20, es decir, 20% del par nominal, la deceleración controlada no se activa: paso en rueda libre. 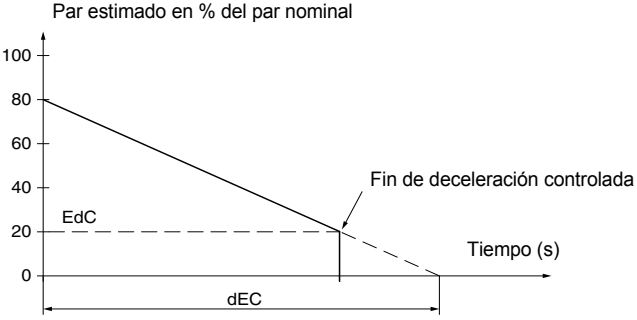 		

Código	Descripción	Rango de ajuste	Ajuste de fábrica
brC	**Nivel de par de frenado interno**	0 a 100%	50%
	Sólo se puede acceder a este parámetro si StY = -b-. En la parada de tipo -b-, permite ajustar la intensidad de frenado. El frenado está activo hasta el 20% de la velocidad nominal, la parada completa del motor se establece ajustando el tiempo de inyección de la corriente pseudo continua en el motor (en dos fases). Véase el parámetro EbA siguiente. 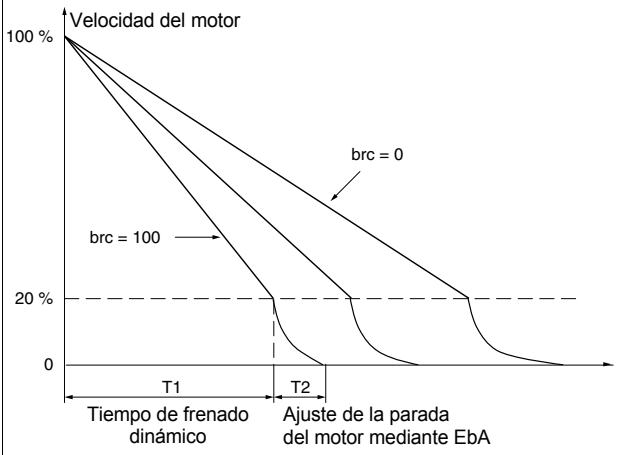 Tiempo de inyección pseudo continua: T2 = T1 x EbA Nota: brC no determina el tiempo T1. T1 es el tiempo en segundos que ha necesitado el motor para pasar del 100% de la velocidad nominal al 20% (por lo tanto, depende de las características del motor y de la aplicación).		
EbA	**Tiempo de frenado pseudo continuo**	20 a 100%	20%
	Sólo se puede acceder a este parámetro si StY = -b-. Para la parada de tipo -b-, ajuste del tiempo de inyección de corriente al final del frenado. Permite ajustar el tiempo de inyección de corriente. Ajustable del 20 al 100% del tiempo de frenado dinámico (T1). Ejemplo: Frenado dinámico = 10 s (T1) El tiempo de parada puede variar de 2 a 10 s (T2) EbA = 20 Corresponde a un tiempo de inyección de 2 s EbA = 100 Corresponde a un tiempo de inyección de 10 s Ajuste de fábrica: 20		

Menú Protección PrO

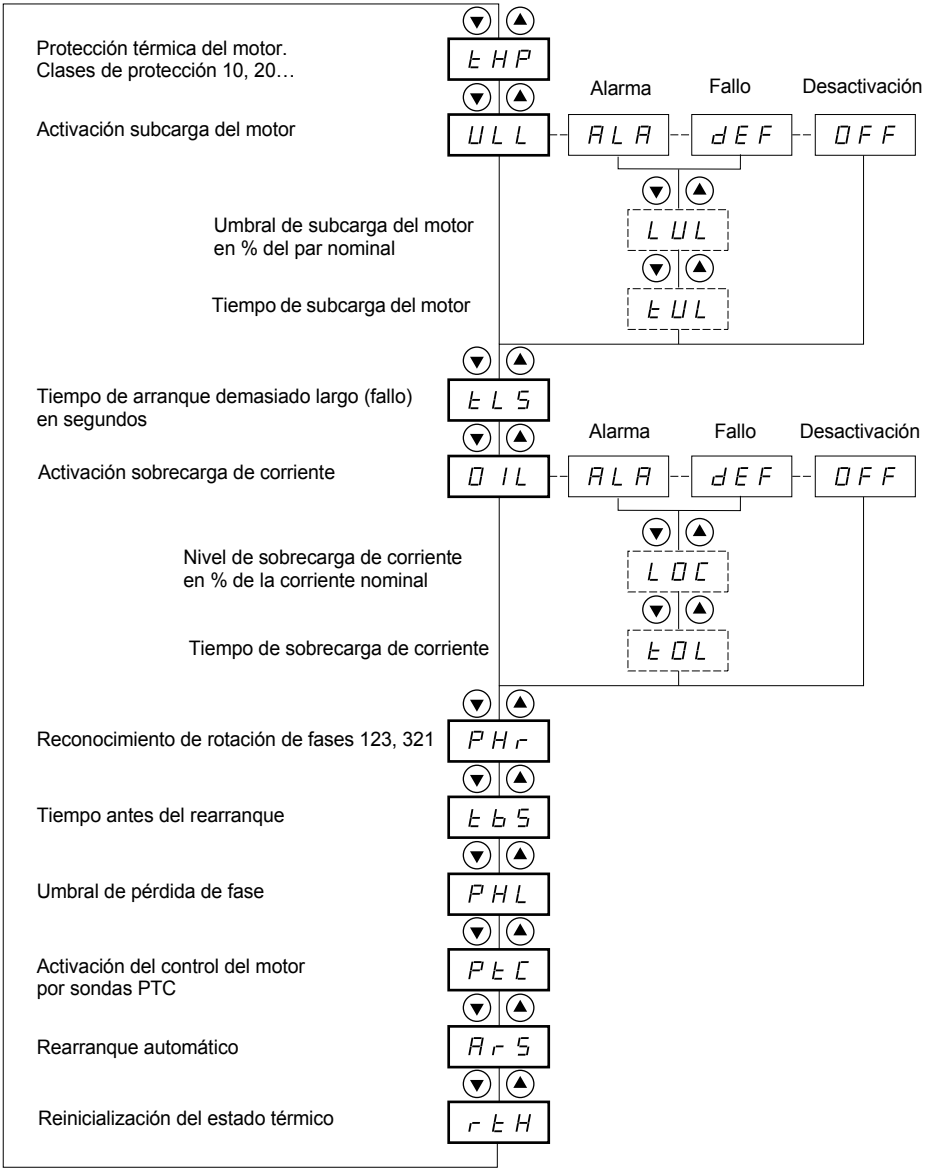

Parámetros en el menú

Selección posible

Parámetro que aparece según la selección

Para acceder a los parámetros, véase la página 292.

Menú Protección PrO

Los parámetros de protección sólo pueden modificarse en la parada.

Código	Descripción	Rango de ajuste	Ajuste de fábrica
tHP	**Protección térmica del motor**		10
	Véase “Protecciones térmicas”, página 287. 30: clase 30 25: clase 25 20: clase 20 (aplicación severa) 15: clase 15 10: clase 10 (aplicación estándar) 10A: clase 10A 2: en clase 2 OFF: sin protección		
ULL	**Activación subcarga del motor**		OFF
	En caso de un par motor inferior a un umbral ajustable LUL durante un tiempo superior a un valor ajustable tUL: - ALA: activación de una alarma (bit interno y salida lógica configurable) - dEF: bloqueo del arrancador y visualización del fallo ULF - OFF: sin protección 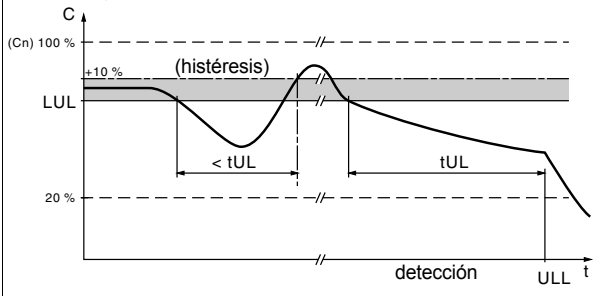		
LUL	**Umbral de subcarga del motor**	20% a 100% de Mn	60%
	Este parámetro no está disponible si ULL = OFF. LUL se puede ajustar del 20 al 100% del par nominal del motor.		
tUL	**Tiempo de subcarga del motor**	1 a 60 s	60 s
	Este parámetro no está disponible si ULL = OFF. La temporización tUL se activa desde que el par motor es inferior al umbral LUL y se reinicializa si el par pasa este umbral LUL de + 10% (histéresis).		
tLS	**Tiempo de arranque demasiado largo**	10 a 999 s u OFF	OFF
	Si el tiempo de ajuste supera el valor de tLS, el arrancador se bloquea y muestra el fallo StF. Las condiciones que determinan el final de un arranque son las siguientes: tensión de red aplicada al motor (ángulo de encendido mínimo) y corriente del motor inferior a 1,3 In. - OFF: sin protección		

La configuración de un control de alarma (ALA) notifica la presencia de un fallo pero no garantiza la protección directa de la instalación

ESPAÑOL

Menú Protección PrO

Código	Descripción	Rango de ajuste	Ajuste de fábrica
OIL	**Activación sobrecarga de corriente**		OFF
	Función activa únicamente en el régimen establecido. Si la corriente del motor supera el umbral ajustable LOC durante un tiempo superior a un valor ajustable tOL: - ALA: activación de una alarma (bit interno y salida lógica configurable) - dEF: bloqueo del arrancador y visualización del fallo OLC - OFF: sin protección 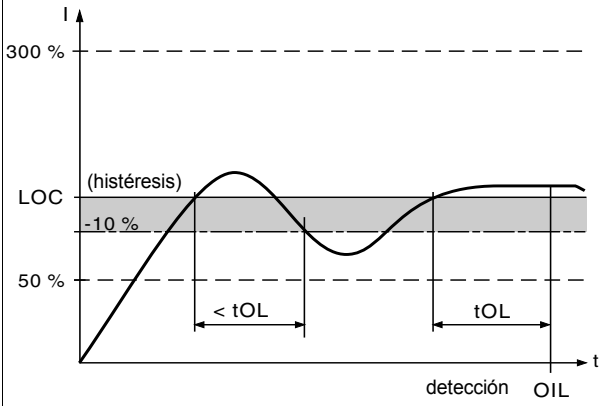		
LOC	**Umbral de sobrecarga de corriente**	50% a 300% de In	80%
	Este parámetro no está disponible si OIL = OFF. LOC se puede ajustar del 50% al 300% de la corriente nominal del motor.		
tOL	**Tiempo de sobrecarga de corriente**	0,1 a 60 s	10 s
	Este parámetro no está disponible si OIL = OFF. La temporización tOL se activa desde el momento en el que la corriente del motor es superior al umbral LOC y se reinicializa si la corriente vuelve a descender por debajo de dicho umbral de al menos un 10% (histéresis).		

La configuración de fábrica de un control de alarma (ALA) notifica la presencia de un fallo pero no garantiza la protección directa de la instalación

ESPAÑOL

Menú Protección PrO

Código	Descripción	Rango de ajuste	Ajuste de fábrica
PHr	**Protección contra la inversión de las fases de red**	321 o 123 o no	no
	Si las fases de la red no están en el orden configurado, el arrancador se bloquea y muestra el fallo PIF. - 321: sentido inverso (L3 - L2 - L1) - 123: sentido directo (L1 - L2 - L3) - no: sin control		
tbS	**Tiempo antes del rearranque**	0 a 999 s	2 s
	Evita arranques consecutivos demasiado próximos que puedan calentar excesivamente el motor. La temporización se dispara a partir del paso en rueda libre. En el control de 2 hilos, el rearranque se efectúa después de la temporización si la entrada de control RUN ha permanecido accionada. En el control de 3 hilos, el rearranque se efectúa después de la temporización si se da una nueva orden de control RUN (frente ascendente). El arrancador muestra “tbS” durante la temporización.		
PHL	**Umbral de pérdida de fase**	5 a 10%	10%
	Si la corriente del motor pasa a ser inferior a este umbral en una fase durante 0,5 s o en las tres fases durante 0,2 s, el arrancador se bloquea y muestra el fallo PHF. Ajustable entre el 5 y el 10% del calibre del arrancador ICL.		
PtC	**Activación del control del motor por sondas PTC**		OFF
	Las sondas PTC del motor deben conectarse a la entrada analógica adecuada. Esta protección es independiente de la protección térmica calculada (parámetro tHP); las dos protecciones se pueden utilizar conjuntamente. - ALA: activación de una alarma (bit interno y salida lógica asignable) - dEF: bloqueo del arrancador y visualización del fallo OtF - OFF: sin protección		
Ars	**Rearranque automático**	On - OFF	OFF
	Después del bloqueo por fallo, siempre que éste haya desaparecido y las demás condiciones de funcionamiento lo permitan. El rearranque se efectúa mediante una serie de intentos automáticos separados 60 s. Si el arranque no se produce a los 6 intentos, el proceso se abandona y el arrancador permanece bloqueado hasta que se apague y se vuelva a poner en tensión o mediante rearme manual (ver capítulo "Fallos - causas - soluciones" página 323). Los fallos que autorizan esta función son: PHF, FrF, CLF, USF. El relé de seguridad del arrancador permanece activado si la función también está activada. La orden de marcha debe mantenerse. Esta función sólo puede utilizarse con control 2 hilos. - OFFþ: función inactiva. - Onþ: función activa. **Asegúrese de que el rearranque automático no comporta riesgos humanos ni materiales**		
rtH	**Reinicialización del estado térmico del motor calculado por el arrancador**	no - YES	no
	- no: función inactiva - YES: función activa		

La configuración de fábrica de un control de alarma (ALA) notifica la presencia de un fallo pero no garantiza la protección directa de la instalación

ESPAÑOL

Menú Ajustes avanzados drC

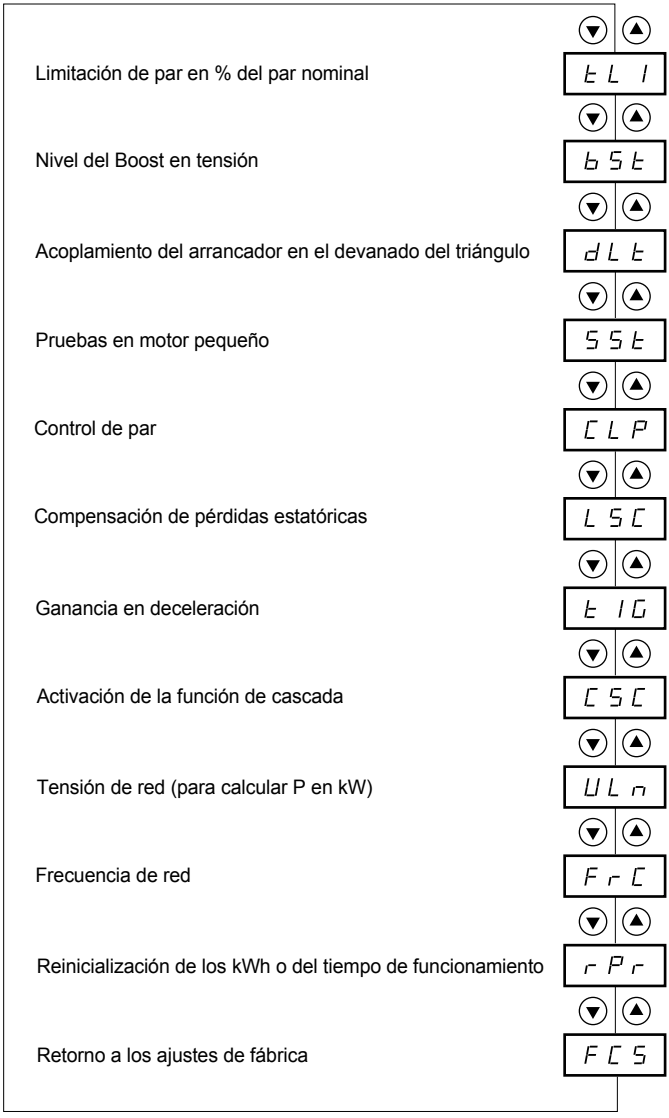

Parámetros en el menú

Menú Ajustes avanzados drC

Los parámetros de los ajustes avanzados sólo pueden modificarse en la parada.

Código	Descripción	Rango de ajuste	Ajuste de fábrica
tLI	**Limitación de par**	10 a 200% u OFF	OFF
	Permite limitar la referencia de par para evitar pasar al modo hipersíncrono en aplicaciones de fuerte inercia. Permite un arranque de par constante si tqO = tLI. - OFF: sin limitación - 10 a 200: ajuste de la limitación en % del par nominal		
bSt	**Nivel del Boost en tensión**	50 a 100% u OFF	OFF
	Posibilidad de aplicar una tensión ajustable durante 100 ms cuando aparece una orden de marcha. Cuando termina este intervalo de tiempo, el arrancador retoma una rampa de aceleración estándar a partir del valor de par inicial ajustado (tq0). Esta función permite superar un eventual par "de despegue" (fenómeno de adherencia en la parada o mecánica dura). - OFF: función inactiva - 50 a 100: ajuste en % de la tensión nominal del motor 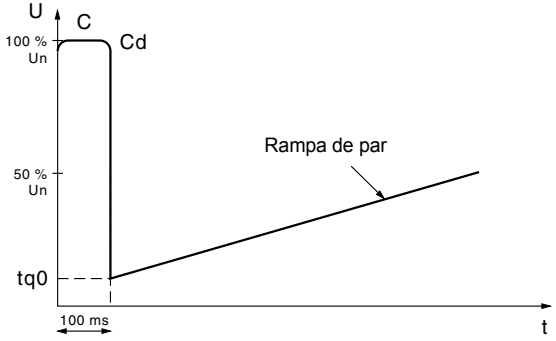 **En caso de sobreclasificación del arrancador (Im motor > Im ATS48), un valor muy elevado del parámetro bSt puede provocar un bloqueo del arrancador en OCF**		
dLt	**Acoplamiento del arrancador en el devanado del triángulo**	on - OFF	OFF
	Esta disposición permite realizar una sobreclasificación de 1,7 en potencia del arrancador, pero no permite frenado dinamica. - OFF: par normal en línea - On: acoplamiento en el devanado del triángulo del motor La corriente nominal del motor In sigue siendo la de la placa de características del motor, y la visualización de la corriente corresponde a la corriente de línea de la red de alimentación. El valor de la corriente nominal In (menú SEt) sigue siendo el valor que figura en la placa del motor para el acoplamiento del triángulo; el arrancador realiza por sí mismo la conversión para controlar la corriente en los devanados. **Sólo se puede acceder a este parámetro para los arrancadores ATS 48•••Q o ATS 48•••YS316.** **• Con esta función, no frenado dinámico.** **• Sin función de cascada** **• Sin calentamiento previo** **• Se debe respetar ell esquema de cableado de la página 279**		

ESPAÑOL

Código	Descripción	Rango de ajuste	Ajuste de fábrica
SSt	**Pruebas en motor pequeño**	On - OFF	OFF
	Para comprobar el arrancador en un entorno de prueba o de mantenimiento en un motor de potencia muy inferior al calibre del arrancador (en particular para los arrancadores de gran potencia). El parámetro de control de par CLP se desactiva automáticamente. - OFF: función inactiva - On: función activa • **SSt vuelve al estado OFF desde que se corta la tensión de control. En la siguiente puesta en tensión, el fallo PHF y el parámetro CLP recuperan su configuración inicial.** • **SST está dedicado únicamente al mantenimiento y a las pruebas del arrancador.**		
CLP	**Control de par** (tipo de control).	On - OFF	On
	- OFF: función inactiva - On: función activa En posición On, el arranque y la ralentización se realizan en rampa de par. En posición OFF, el arranque y la ralentización se realizan mediante una variación de tensión. Para las aplicaciones relativas a motores en paralelo en un mismo arrancador o un motor de muy baja potencia en relación con el calibre del arrancador (utilización de un motor subdimensionado para probar el arrancador), se recomienda el control de tensión (CLP = OFF).		
LSC	**Compensación de las pérdidas estatóricas**	0 a 90%	50%
	Parámetro activo en las fases de aceleración (y de deceleración si StY = -d-). En caso de oscilaciones de par, reduzca este parámetro progresivamente hasta que el funcionamiento sea correcto. Los fenómenos de oscilación se dan principalmente en los casos de acoplamiento del arrancador en el devanado del triángulo del motor y en el caso de motores de gran deslizamiento.		
tIG	**Ganancia de deceleración** (para control de par).	10 a 50%	40%
	Sólo se puede acceder a este parámetro si CLP = On y si el parámetro StY (menú ajustes SEt) = -d-. Permite eliminar las inestabilidades en la deceleración. Ajuste en más o en menos en función de las oscilaciones.		
CSC	**Activación de la función de cascada**	On - OFF	OFF
	Véase el esquema en la página 286. - On: función activa - OFF: función inactiva Sólo se puede acceder a este parámetro si el relé R1 se ha asignado previamente a la función “relé de aislamiento” y si las funciones “forzado de parada en rueda libre”, “acoplamiento del arrancador en el devanado del triángulo del motor” y “calentamiento previo” no están configuradas. Asignar una entrada LI = LIC. 255 motores como máximo.		
ULn	**Tensión de la red**	170 a 460 V (ATS48••Q) 180 a 790 V (ATS48••Y)	400 V (ATS48••Q) 460 V (ATS48••Y)
	Este parámetro sirve para calcular la potencia mostrada (parámetros LPr y LAP del menú SUP). La precisión de la visualización depende del ajuste correcto de este parámetro.		

Menú Ajustes avanzados drC

Código	Descripción	Rango de ajuste	Ajuste de fábrica
FrC	**Frecuencia de red**	50-60-AUt	AUt
	- 50: 50 Hz (tolerancia de control del fallo de frecuencia FrF = ± 20%). - 60: 60 Hz (tolerancia de control del fallo de frecuencia FrF = ± 20%). - AUt: reconocimiento automático de la frecuencia de la red por el arrancador con una tolerancia de control del fallo de frecuencia FrF = ± 5%. Se recomiendan las opciones 50 y 60 en caso de alimentación por grupos electrógenos, teniendo en cuenta su gran tolerancia.		
rPr	**Reinicialización de los kWh o del tiempo de funcionamiento**	no-APH-trE	no
	- no: función inactiva - APH: reinicialización de los kWh (1) - trE: reinicialización del tiempo de funcionamiento Debe confirmarse la orden de reinicialización mediante “ENT”. Las acciones de APH y trE son inmediatas; a continuación, el parámetro vuelve automáticamente a no.		
FCS	**Retorno a los ajustes de fábrica**	no - YES	no
	Permite restablecer todos los parámetros a su valor de “salida de fábrica”. - no: función inactiva - YES: función activa; requiere una pulsación prolongada (2 s aproximadamente) para que se tenga en cuenta y a continuación una confirmación mediante el parpadeo de la visualización. El retorno a no del parámetro FCS se realiza después automáticamente al pulsar ESC. **Este parámetro no se puede modificar a través del terminal remoto.**		

(1) La información "kWh consumida" solamente es visible con el software Powersuite o mediante Modbus (dirección W4074).

Menú Asignación de entradas / salidas IO

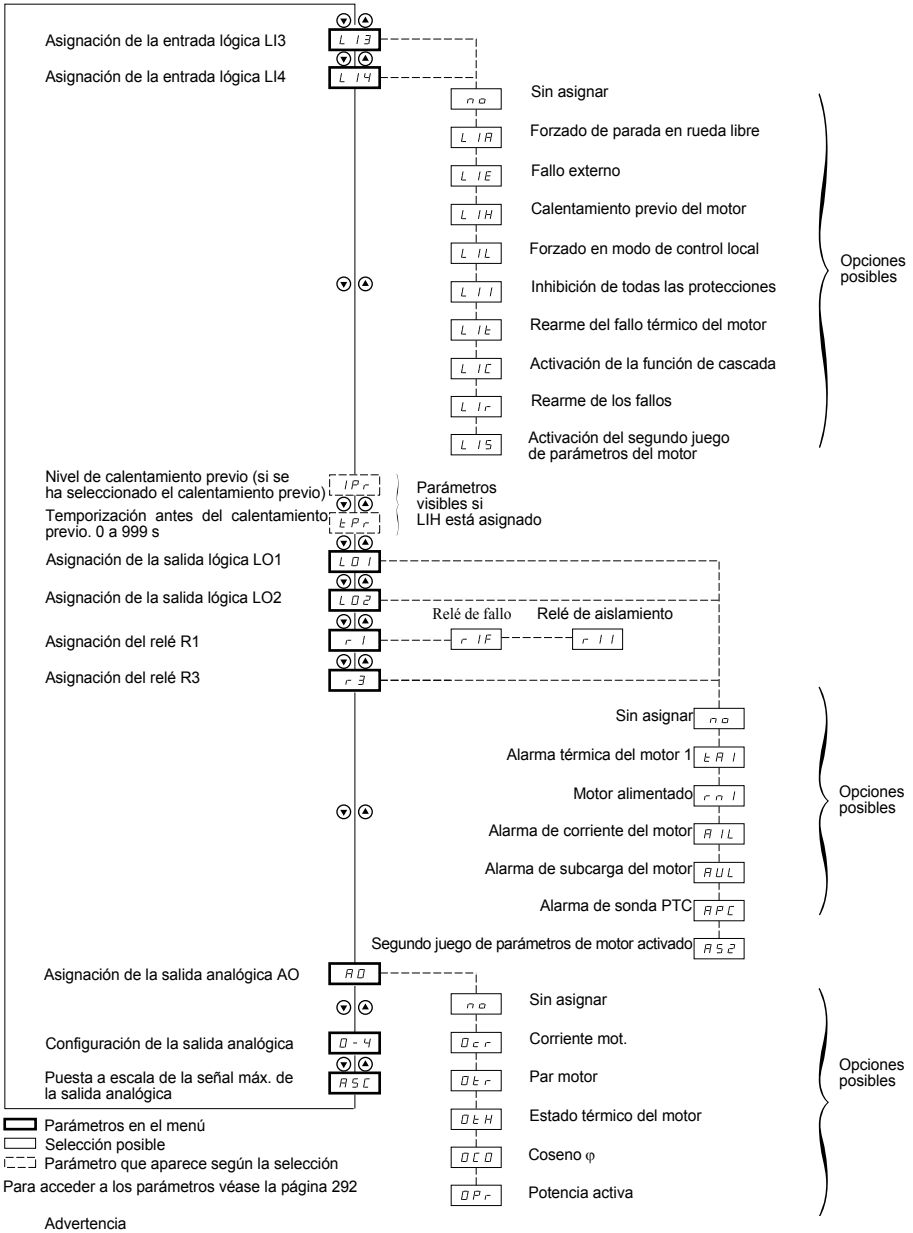

Para acceder a los parámetros véase la página 292

Advertencia

Entrada lógica RUN: no asignable
Entrada lógica STOP: no asignable
Control del contactor de by-pass del arrancador: no asignable (R2)

ESPAÑOL

Menú Asignación de entradas / salidas IO

Los parámetros de asignación de las entradas / salidas sólo pueden modificarse en la parada.

Código	Descripción	Rango de ajuste	Ajuste de fábrica
L I3 L I4	**Entradas lógicas**		LIA LIL

La función elegida está activa si la entrada está en tensión.
- no: sin asignar.
- LIA: forzado de parada en rueda libre desde que aparece una orden de STOP. Esta opción no aparece si el parámetro CSC del menú drC está en “On”. Fuerza la configuración de la parada en rueda libre pero no controla la parada.
- LIE: fallo externo. Permite al arrancador tener en cuenta un fallo de usuario externo (nivel, presión, etc.). El motor se para en rueda libre y el arrancador muestra EtF.
- LIH: (1) calentamiento previo del motor. Esta opción no aparece si el parámetro CSC del menú drC está en “On”. Permite proteger el motor del hielo o de las diferencias de temperatura que pueden provocar condensación. En la parada del motor, la corriente ajustable IPr lo atraviesa después de la temporización ajustable tPr, si la entrada está activada. Esta corriente calienta el motor sin conllevar la rotación. IPr y tbr deben estar ajustados (véase a continuación).

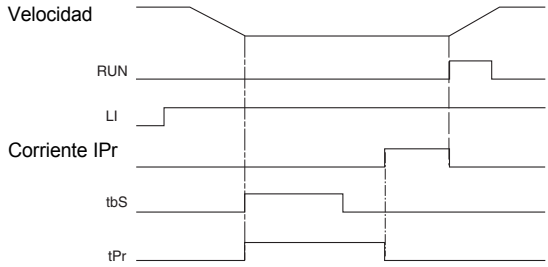

El calentamiento previo se establece cuando la entrada está en tensión y el motor está parado, una vez transcurridas las temporizaciones tPr y tbS (menú PrO). El calentamiento previo se detiene si la entrada está desactivada, si se da una orden de marcha o si se acciona la entrada STOP.
- LIL: forzado en modo de control local. En caso de utilizarse el enlace serie, permite pasar del modo de línea (control por enlace serie) al modo local (control por el bornero).
- LII: (1) inhibición de todas las protecciones. Atención: esta utilización conlleva la pérdida de la garantía del arrancador. Permite el funcionamiento forzado del arrancador en los casos de emergencia (extracción de humo, por ejemplo).
- LIt: rearme del fallo térmico del motor.
- LIC: activación de la función de cascada. En este caso, la protección térmica del motor se inhibe y el relé R1 debe configurarse como relé de aislamiento. Permite arrancar y decelerar varios motores idénticos seguidos con un solo arrancador (véase el esquema de aplicación).
- LIr: rearme de los fallos rearmables.
- LIS: activación del segundo juego de parámetros del motor. Permite arrancar y decelerar dos motores diferentes seguidos o un motor con dos configuraciones diferentes con un solo arrancador.

(1) Esta asignación requiere pulsar ENT durante 10 s para que se valide. (Confirmación mediante parpadeo de la visualización.)
Este parámetro no se puede modificar a través del terminal remoto.

ESPAÑOL

Código	Descripción	Rango de ajuste	Ajuste de fábrica
IPr	**Nivel de calentamiento previo**	0 a 100%	0%
	Este parámetro aparece después de asignar LI3 o LI4 a la función LIH: calentamiento previo del motor. Permite ajustar la corriente de calentamiento previo. Para ajustar el nivel de corriente del motor, utilizar un amperímetro (corriente eficaz) El parámetro In no tiene ningún efecto en la corriente IPr. **ATTENTIÓN** **RIESGO DE DAÑAR EL MOTOR** Si la frecuencia de la red es inestable. Es obligatorio usar un equipo externo para supervisar la frecuencia y desactivar la función de precalentamiento en caso de fluctuaciones. **Si no se siguen estas recomendaciones el equipo pueden producirse daños materiales.**		
tPr	**Temporización antes del calentamiento previo**	0 a 999 mn	5 mn
	Este parámetro aparece después de asignar LI3 o LI4 a la función LIH: calentamiento previo del motor. El calentamiento previo se activa cuando la entrada está en tensión, una vez transcurridas las temporizaciones tPr y tbS (menú PrO).		
LO1 LO2	**Salidas lógicas**		tAI rnI
	- no: sin asignar. - tAI: alarma térmica del motor. Véase página 287. - rnI: motor alimentado (informa de que puede haber corriente en el motor). - AIL: alarma de corriente del motor (umbral OIL y tiempo tOL del menú PrO superados). Véase "Función activa únicamente en el régimen establecido.", página 302. - AUL: alarma de subcarga del motor (umbral LUL y tiempo tUL del menú PrO superados). Véase página 301. - APC: alarma de la sonda PTC del motor. Véase "Activación del control del motor por sondas PTC", página 303. - AS2: segundo juego de parámetros de motor activado. Véase LIS "Entradas lógicas", página 309.		
r1	**Relé R1**		rIF
	- rIF: relé de fallo. El relé R1 se activa cuando el arrancador está en tensión (control CL1/CL2 como mínimo). El relé R1 se desactiva cuando aparece un fallo; el motor pasa a rueda libre. Véase el caso particular cuando la función de rearranque automático está activada y "Fallos - causas - soluciones", página 323a 328 - r1I: relé de aislamiento. El relé R1 está destinado a controlar el contactor de línea a partir de las órdenes de control RUN y STOP y a señalar fallos. El relé R1 se activa con una orden de marcha RUN (o de calentamiento previo). Se desactiva al final del frenado o de la deceleración, o al pasar a rueda libre después de una orden de parada STOP. También se desactiva cuando aparece un fallo; el motor pasa a rueda libre.		
r3	**Relé R3**		rnI
	- no: sin asignar. - tAI: alarma térmica del motor. Véase página 287. - rnI: motor alimentado (informa de que puede haber corriente en el motor). - AIL: alarma de corriente del motor (umbral OIL y tiempo tOL del menú PrO superados). Véase "Función activa únicamente en el régimen establecido.", página 302. - AUL: alarma de subcarga del motor (umbral LUL y tiempo tUL del menú PrO superados). Véase página 301. - APC: alarma de la sonda PTC del motor. Véase "Activación del control del motor por sondas PTC", página 303. - AS2: segundo juego de parámetros de motor activado. Véase LIS "Entradas lógicas", página 309.		

Relé R2 de final de arranque (no asignable)

El relé de final de arranque R2 se activa cuando el arrancador está en tensión, no presenta ningún fallo y ha terminado el arranque del motor. Se activa mediante solicitud de parada y por un fallo. Incluye un contacto (NA).

Se puede utilizar para permitir realizar by-pass del ATS 48 al final del arranque.

Código	Descripción	Rango de ajuste	Ajuste de fábrica
AO	**Salida analógica**		OCr
	- no: sin asignar - OCr: corriente motor - Otr: par motor - OtH: estado térmico del motor - OCO: coseno φ - OPr: potencia activa		
O4	**Configuración del tipo de señal generada por la salida AO**	020 - 420	020
	- 020: señal 0 - 20 mA - 420: señal 4 - 20 mA		
ASC	**Puesta a escala de la señal máx. de la salida analógica**	50 a 500%	200
	En porcentaje del valor nominal del parámetro configurado o de 1 para el coseno φ.		

Menú Parámetros del 2º motor St2

Los parámetros del 1º o 2º motor son seleccionados a partir de la entrada lógica (LIS). Por el contrario los parámetros motor seleccionados se toman en cuenta:

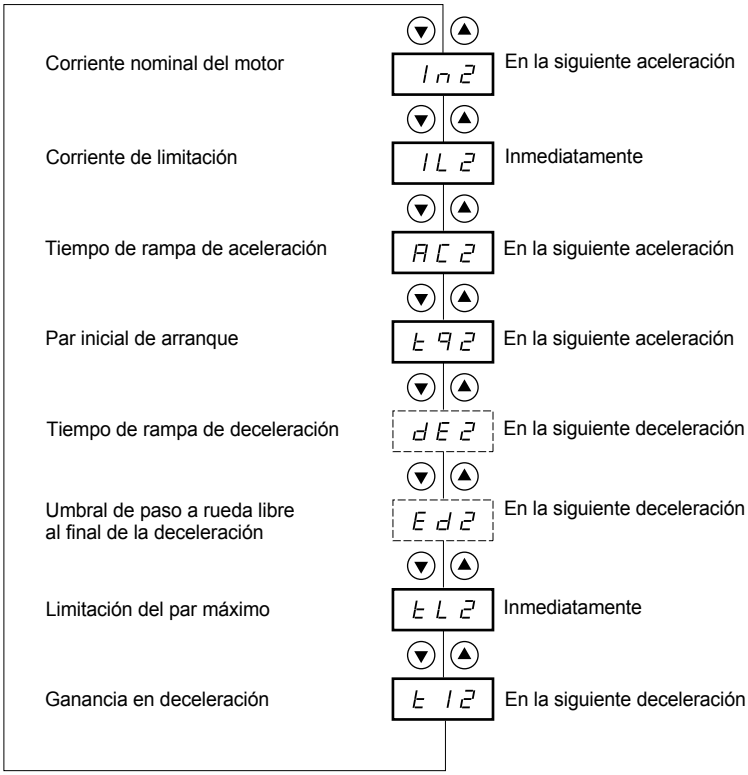

Parámetro en el menú

Parámetro que aparece según la selección y la afectación de StY en el menú SEt

Menú Parámetros del 2º motor St2

Este menú sólo se puede ver si se ha asignado una entrada lógica a la función de activación del segundo juego de parámetros del motor (LIS) en el menú Asignación de entradas / salidas I O.

Código	Descripción	Rango de ajuste	Ajuste de fábrica
In2	**Corriente nominal del motor**	0,4 a 1,3 ICL	(1)
	Ajuste el valor de la corriente nominal del motor indicado en la placa de características, incluso en caso de acoplamiento del arrancador en el devanado del triángulo del motor (PrO). Compruebe que esta corriente está comprendida entre 0,4 y 1,3 ICL (ICL: calibre del arrancador). Véase “Asociación arrancador - motor”, página 260.		
IL2	**Corriente de limitación**	150 a 700 % de In, limitado a 500 % de ICL	400 % de In
	La corriente de limitación IL2 se expresa en % de In2. Está limitado al 500% de ICL (calibre del arrancador, véanse las tablas “Asociación arrancador - motor”, página 260). Corriente de limitación = IL2 x In2 Ejemplo 1: In2 = 21 A, IL2 = 300%, corriente de limitación = 300% x 22 A = 66 A Ejemplo 2: ATS 48C21Q, con ICL = 210 A In2 = 195 A, IL2 = 700%, corriente de limitación = 700% x 195 = 1365, limitado a 500% x 210 = 1.050 A		
AC2	**Tiempo de rampa de aceleración**	1 a 60 s	15 s
	Tiempo de crecimiento del par de arranque entre 0 y el par nominal Cn, es decir, la pendiente de la rampa de crecimiento de par. 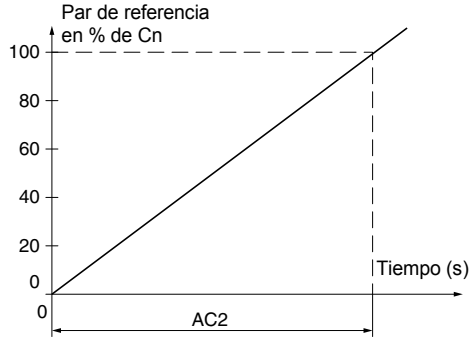 		

(1) Ajuste de fábrica de In2 correspondiente al valor usual de un motor normalizado de 4 polos en tensión 400 V y clase 10 (para ATS 48•••Q).
Ajuste de fábrica de In2 correspondiente al valor usual de un motor normalizado según NEC en tensión 460 V y clase 10 (para ATS 48•••Y).

Código	Descripción	Rango de ajuste	Ajuste de fábrica
tq2	**Par inicial de arranque**	0 a 100% de Mn	20%
	Ajuste del par inicial en las fases de arranque, varía de 0 a 100% del par nominal. 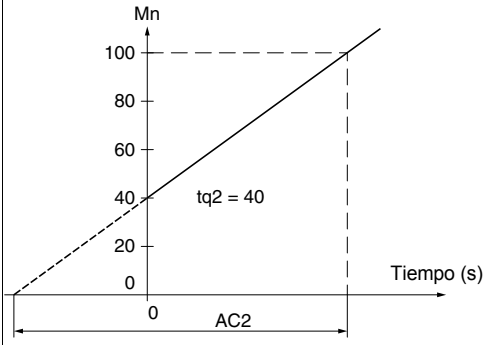 		
dE2	**Tiempo de rampa de deceleración**	1 a 60 s	15 s
	Sólo se puede acceder a este parámetro si StY = -d-. Permite ajustar un intervalo de tiempo comprendido entre 1 y 60 s, para pasar del par estimado al par nulo (= pendiente de la rampa de reducción de par en una parada -d-). De esta forma se adapta la progresividad de la deceleración y se evitan choques hidráulicos en las aplicaciones de bombas, mediante la modificación de la pendiente de la referencia de par. 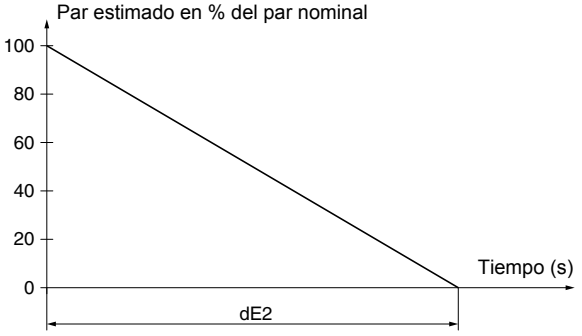 		

Código	Descripción	Rango de ajuste	Ajuste de fábrica
Ed2	**Umbral de paso en rueda libre al final de la deceleración**	0 a 100%	20%
	Sólo se puede acceder a este parámetro si StY = -d- y si el parámetro CLP del menú accionamiento (drC) ha permanecido con el ajuste de fábrica (On). Permite ajustar el nivel del par final comprendido entre 0 y 100% del par estimado al principio de la deceleración. En las aplicaciones de tipo bomba, el control de la deceleración no se encuentra necesariamente por debajo de un nivel de carga ajustado por Ed2. Si el par estimado al principio de la deceleración se encuentra por debajo de 20, es decir, 20% del par nominal, la deceleración controlada no se activa: paso en rueda libre. 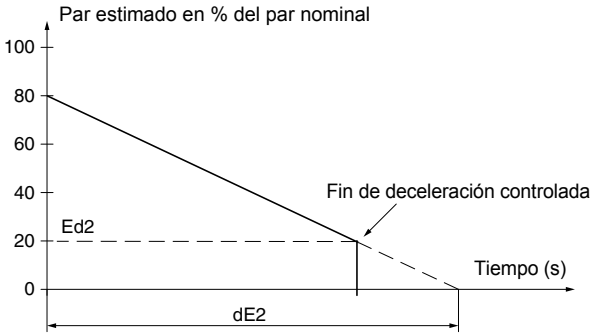 		
tL2	**Limitación del par máximo**	10 a 200% u OFF	OFF
	Permite limitar la referencia de par para evitar pasar al modo hipersíncrono en aplicaciones de fuerte inercia. Permite un arranque de par constante si tq2 = tL2. - OFF: sin limitación -10 a 200: ajuste de la limitación en % del par nominal		
tI2	**Ganancia de deceleración** (para control de par).	10 a 50%	40%
	Sólo se puede acceder a este parámetro si CLP = On y si el parámetro StY (menú ajustes SEt) = -d-. Permite eliminar las inestabilidades en la deceleración. Ajuste en más o en menos en función de las oscilaciones.		

Menú Comunicación COP

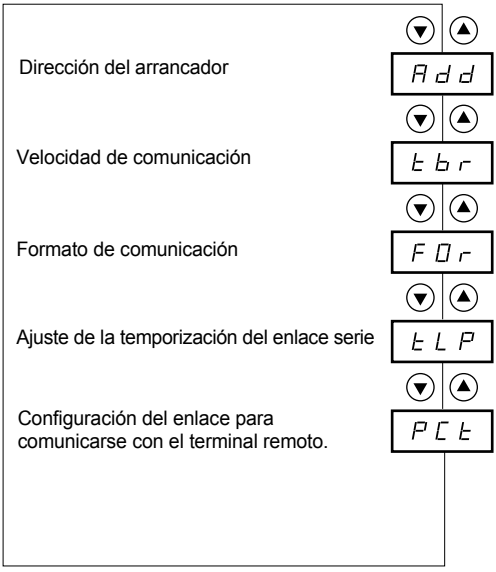

Parámetros en el menú

Menú Comunicación COP

Los parámetros del menú Comunicación sólo pueden modificarse en la parada.
El protocolo interno utilizado es Modbus.

Código	Descripción	Rango de ajuste	Ajuste de fábrica
Add	**Dirección del arrancador** por el enlace serie RS485.	0 a 31	0
tbr	**Velocidad de comunicación** en kilobits por segundo.	4,8 - 9,6 - 19,2	19,2
FOr	**Formato de comunicación.** 8o1: 8 bits de datos, paridad impar, 1 bit de parada 8E1: 8 bits de datos, paridad par, 1 bit de parada 8n1: 8 bits de datos, sin paridad, 1 bit de parada 8n2: 8 bits de datos, sin paridad, 2 bits de parada		8n1
tLP	**Ajuste de la temporización del enlace serie** (1)**.**	0,1 a 60 s	5 s
PCt	**Configuración del enlace serie para comunicarse con el terminal remoto.** On: función activa. Configura temporalmente el arrancador (tbr y FOr) para comunicarse con el terminal remoto, en caso que tbr y FOr no estén en valore de fábrica. OFF: función de configuración temporalmente inactiva. **PCt vuelve al estado OFF desde que se corta la tensión de control. En la siguiente puesta en tensión, los parámetros tbr y FOr recuperan su configuración inicial.**		OFF

(1) Asegúrese de que el tiempo ajustado es compatible con la seguridad de funcionamiento de la máquina

ESPAÑOL

Menú Supervisión SUP

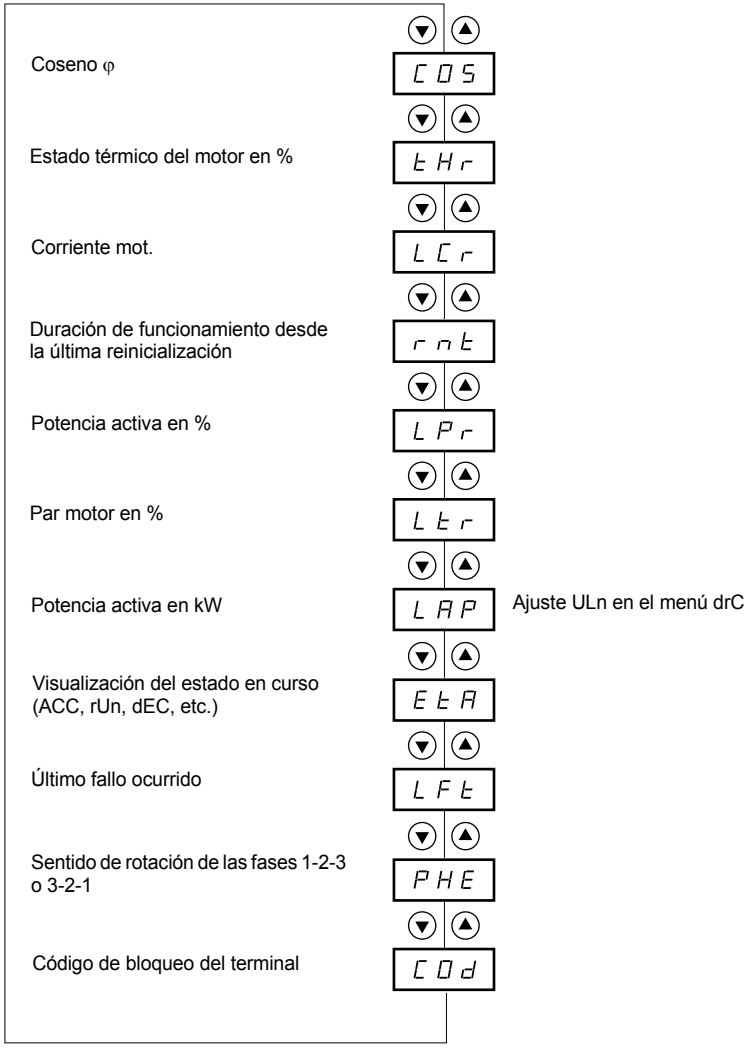

Parámetros en el menú

Menú Supervisión SUP

Es posible modificar el parámetro que se va a visualizar en parada o en funcionamiento.
En el ajuste de fábrica, la corriente del motor se visualiza (parámetro LCr).
La visualización elegida se registra:
- 1ª pulsación de la tecla ENT: la elección es provisional y se borrará la próxima vez que se deje el aparato sin tensión.
- 2ª pulsación de la tecla ENT durante 2 segundos: la visualización parpadea y la selección es definitiva salvo que se modifique.

Código	Parámetro	Unidad
COS	**Coseno** φ	0,01
tHr	**Estado térmico del motor** Varía de 0 a 125% 100% corresponde al estado térmico nominal para la corriente In ajustada.	%
LCr	**Corriente mot.** En amperios hasta 999 A (ejemplos: 01,5 = 1,5 A; 15,0 = 15 A; 150 = 150 A) En kilo-amperios a partir de 1.000 A (ejemplos: 1,50 = 1.500 A; 1,15 = 1.150 A)	A o kA
rnt	**Duración de funcionamiento** en horas desde la última reinicialización. En horas hasta 999 h (ejemplos: 001 = 1 h; 111 = 111 h) En kilo-horas de 1.000 a 65.535 (ejemplos: 1,11 = 1.110h; 11,1 = 11.100 h) Superadas las 65.535 h (65,5) la visualización se vuelve a poner a cero El tiempo de funcionamiento se cuenta cuando el motor no está parado, es decir, cuando se activan los tiristores (calentamiento, aceleración, régimen permanente, deceleración, frenado) y en régimen permanente by-pass. La reinicialización del contador horario puede realizarse en línea mediante la palabra de control y el terminal en la parada. En la puesta fuera de tensión del control, el contador horario se guarda en la memoria EEPROM.	h o kh
LPr	**Potencia activa** Varía de 0 a 255% 100% corresponde a la potencia en la corriente nominal y a plena tensión.	%
LTr	**Par motor** Varía de 0 a 255% 100% corresponde al par nominal.	%
LAP	**Potencia activa en kW** Este parámetro requiere configurar el valor exacto de la tensión de red ULn en el menú drC.	kW
ETA	**Visualización del estado en curso** - nLP: arrancador sin orden de marcha y potencia no alimentada - rdY: arrancador sin orden de marcha y potencia alimentada - tbS: temporización de arranque no transcurrida - ACC: aceleración en curso - dEC: deceleración en curso - rUn: marcha en régimen establecido - brL: frenado en curso - CLI: arrancador en limitación de corriente - nSt : forzado parada en rueda libre vía conexión serie	
LFt	**Último fallo aparecido** (véase la página 323). Cuando no se ha memorizado ningún fallo, el visualizador indica **nOF.** Cuando los defectos estén inhibidos aparece el mensaje**InH**.	
PHE	**Sentido de rotación de las fases** vistas desde el arrancador - 123: sentido directo (L1 - L2 - L3) - 321: sentido inverso (L3 - L2 - L1)	

Código	Parámetro
COd	**Código de bloqueo del terminal** Permite proteger la configuración del arrancador mediante un código de acceso. **Cuidado: Antes de introducir un código, no se olvide de anotarlo cuidadosamente** •**OFF**: ningún código bloquea el acceso - Para bloquear el acceso, componga un código (de 2 a 999) aumentando la visualización con ▲ y a continuación pulse ENT. Aparece “On” y se bloquea el acceso al parámetro. • **On**: un código bloquea el acceso (de 2 a 999) - **Para desbloquear el acceso**, componga el código aumentando la visualización con▲ y a continuación pulsando ENT. El código permanece mostrado y el acceso se desbloquea hasta la próxima puesta fuera de tensión. En la siguiente puesta en tensión, el acceso al parámetro vuelve a estar bloqueado. - **Si se introduce un código incorrecto**, la visualización vuelve a pasar a “On” y el acceso al parámetro sigue bloqueado. • **XXX**: el acceso al parámetro está desbloqueado (el código permanece mostrado). - **Para activar de nuevo el bloqueo con el mismo código**, con el acceso al parámetro desbloqueado, vuelva a “On” con la tecla ▼ y a continuación pulse ENT. Aparece “On” y se bloquea el acceso al parámetro. - **Para bloquear el acceso con un nuevo código**, con el acceso alparámetro desbloqueado, componga el nuevo código aumentando la visualización con ▲ o ▼ y pulsando ENT. Aparece “On” y se bloquea el acceso al parámetro. - **Para eliminar el bloqueo**, con el acceso al parámetro desbloqueado, vuelva a “OFF” con la tecla ▼ y a continuación pulse ENT. “OFF” permanece mostrado, el acceso al parámetro se desbloquea y el resto incluso después de la puesta fuera y en tensión.

ESPAÑOL

Cuando el acceso está bloqueado mediante un código, sólo se puede acceder a los parámetros de control y sólo se puede seleccionar provisionalmente el parámetro mostrado.

Tabla de compatibilidad

La elección de las funciones de aplicación puede ser limitada por la incompatibilidad de ciertas funciones entre ellas. Las funciones que no son listadas en esta tabla no tienen ninguna incompatibilidad.

Funciones	Parada en deceleración	Parada dinámica	Forzado parada en rueda libre	Protección térmica	Pérdida fase motor	Cableado en el devanado del triángulo del motor	Prueba con pequeño motor	Cascada	Precalentamiento
Parada en deceleración									
Parada dinámica									
Forzado parada en rueda libre									
Protección térmica									(2)
Pérdida fase motor									
Cableado en el devanado del triángulo del motor									
Prueba con pequeño motor									
Cascada									
Precalentamiento				(2)					

Funciones compatibles
Funciones incompatibles
Sin objeto

(1) Pérdida fase motor no detectada.

(2) Mientras el precalentamiento del motor, la protección térmica no está asegurada. Arreglar correctamente el corriente de precalentaminento IPr.

Mantenimiento

El Altistart 48 no necesita mantenimiento preventivo. No obstante, es aconsejable realizar las siguientes operaciones periódicamente:

- Compruebe el estado y los aprietes de las conexiones
- Asegúrese de que la temperatura cercana al aparato se mantiene a un nivel aceptable y que la ventilación es eficaz (duración de vida media de los ventiladores: de 3 a 5 años dependiendo de las condiciones de explotación)
- Quite el polvo del radiador en caso de que sea necesario

Asistencia al mantenimiento

Si detecta anomalías en la puesta en servicio o durante la explotación, compruebe en primer lugar que las recomendaciones relativas a las condiciones ambientales, el montaje y las conexiones se han respetado.

El primer fallo que se detecta queda grabado en memoria y aparece en la pantalla: el arrancador se bloquea y los relés R1 y R2 cambian de estado según su asignación.

Eliminación de fallos

Corte la alimentación de control del arrancador si se trata de un fallo no rearmable.
Espere a que se apague por completo el visualizador.
Busque la causa del fallo y elimínela.
Restablezca la alimentación: al hacerlo, se borra el fallo en caso de que haya desaparecido.

En algunos casos, se puede volver a arrancar automáticamente una vez desaparecido el fallo, siempre que esta función haya sido programada.

Menú Supervisión

Permite prever y encontrar las causas de los fallos mediante la visualización del estado del arrancador y de los valores actuales.

Repuestos y reparaciones

Consulte los servicios de Schneider Electric.

Fallos - causas - soluciones

Por regla general, cuando se produzca alguna anomalía al poner en marcha el arrancador, es preferible realizar un ajuste de fábrica y volver a realizar los ajustes por etapas.

Sin arranque ni visualización de fallos

- Sin visualización: compruebe la presencia de tensión en la alimentación de control CL1/CL2 (véase la página 275)
- Compruebe que el código mostrado no corresponde al estado normal del arrancador (véase la página 293)
- Compruebe la presencia de las órdenes de marcha RUN/STOP (véase la página 276)

Fallos no rearmables

Cuando aparece este tipo de fallo, el arrancador se bloquea y el motor pasa a rueda libre.

Señalización:
- Apertura del relé de final de arranque R2
- Apertura del relé R1 (después del bloqueo del arrancador)
- Parpadeo del código de fallo en el visualizador
- Memorización de los 5 últimos fallos, visibles con el software integrado PowerSuite

Condiciones de rearranque:
- Desaparición de las causas del fallo
- Corte y posterior restablecimiento de la alimentación de control

Fallo visualizado	Posible causa	Procedimiento, solución
InF	**Fallo interno**	Cortar y restablecer a continuación la alimentación de control. Si el fallo persiste, contacte con los servicios de Schneider Electric.
OCF	**Sobreintensidad:** • By-pass de impedancia en la salida del arrancador • By-pass interno • Contactor de by-pass pegado • Sobreclasificación arrancador	Quite tensión al arrancador. • Compruebe los cables de enlace y el aislamiento del motor • Compruebe los tiristores • Compruebe el contactor de by-pass (contacto pegado) • Verificar el valor del parámetro bSt en el menú drC, véase la página 305
PIF	**Inversión de fases** La rotación de las fases de la red no coincide con la selección efectuada por PHr en el menú Protección.	Invierta dos fases de la red o ajuste PHr = no
EEF	**Fallo de memoria interno**	Corte y restablezca a continuación la alimentación de control. Si el fallo persiste, contacte con los servicios de Schneider Electric.

Fallos rearmables inmediatamente en la desaparición de las causas

Cuando aparece este tipo de fallo, el arrancador se bloquea y el motor pasa a rueda libre.

Señalización:
- Apertura del relé de final de arranque R2.
- Apertura del relé R1 únicamente si está configurado como relé de aislamiento.
- Parpadeo del código de fallo en el visualizador mientras está presente el fallo.
- Memorización de los 5 últimos fallos, visibles con el software integrado PowerSuite.

Condiciones de rearranque:
- Desaparición de las causas del fallo.
- En el control de 2 hilos, es preciso que la orden de marcha se mantenga en la entrada RUN.
- En el control de 3 hilos, se necesita una nueva orden de marcha (frente ascendente) en la entrada RUN.

Fallo visualizado	Posible causa	Procedimiento, solución
CFF	**Configuración incorrecta** en la puesta en tensión.	• Vuelva a los ajustes de fábrica en el menú de accionamiento drC. • Configure de nuevo el arrancador.
CFI	**Configuración incorrecta** La configuración cargada en el arrancador mediante enlace serie no es coherente.	• Compruebe la configuración previamente cargada. • Cargue una configuración coherente.

Fallos rearmables manuellement que pueden ser objeto de rearranque automático (1)

Cuando aparece este tipo de fallo, el arrancador se bloquea y el motor pasa a rueda libre.

Señalización con rearranque automático:
- Apertura del relé de final de arranque R2
- Apertura del relé R1 únicamente si está configurado como relé de aislamiento. R1 permanece cerrado si está configurado como relé de fallo, véase la página 310
- Parpadeo del código de fallo en el visualizador mientras está presente el fallo
- Memorización de los 5 últimos fallos, visibles con el software integrado PowerSuite

Condiciones de rearranque para los fallos siguientes con rearranque automático (en control de 2 hilos únicamente):
- Desaparición de las causas del fallo
- Orden de marcha mantenida en la entrada RUN
- Se realizan 6 intentos de rearranque separados 60 segundos cada uno. A la sexta, si el fallo aún está presente, se debe rearmar manualmente (ver página siguiente) y el R1 se abre si está configurado como relé de fallo.

Fallo visualizado	Posible causa	Procedimiento, solución
FrF (2)	**Frecuencia de red sin tolerancia.** Este fallo se puede configurar en el menú Ajustes avanzados drC, parámetro FrC.	• Compruebe la red. • Compruebe que la configuración del parámetro FrC es compatible con la red utilizada (grupos electrógenos, por ejemplo).
PHF (3)	**Pérdida de una fase de red**	• Compruebe la red, la estabilidad de la frecuencia, la conexión del arrancador y todos los dispositivos situados entre la red y el arrancador (contactor, fusibles, disyuntor, etc.). • Si se usa el contactor de bypass, compruebe el mecanismo (desgaste, juego mecánico, lubricación, bloqueos...)
	Pérdida de una fase de motor Si la corriente del motor pasa a ser inferior al umbral ajustable PHL en una fase durante 0,5 s o en las tres fases durante 0,2 s. Este fallo se puede configurar en el menú de protección PrO, parámetro PHL.	• Compruebe la conexión del motor (bornas T1, T2, T3) y los aparatos de aislamiento eventualmente situados entre la red y el motor (contactores, disyuntores, etc.). • Compruebe el estado del motor. • Compruebe que la configuración del parámetro PHL es compatible con el motor utilizado.

(1) Si no se ha seleccionado la función de rearranque automático, véase la página 327 para la señalización y las condiciones de rearranque de estos fallos.
(2) Después de cada encendido de la alimentación de control, la detección de FRF se lleva a cabo solo en el primer encendido de la alimentación principal.
(3) En el siguiente encendido de la alimentación principal, una mala frecuencia generará también un fallo PHF de desincronización.

Fallos rearmables manuellement que pueden ser objeto de rearranque automático (1)

Condiciones de rearranque para los fallos siguientes:
- Desaparición de las causas del fallo
- Orden de marcha mantenida (control de 2 hilos únicamente)

Fallo visualizado	Posible causa	Procedimiento, solución
USF	**Fallo de alimentación de potencia** en una orden de marcha.	• Compruebe la tensión y el circuito de alimentación de potencia.
CLF	**Pérdida de alimentación de control**	• Corte superior a 200 ms en CL1/CL2

(1) Si no se ha seleccionado la función de rearranque automático, véase la página 327 para la señalización y las condiciones de rearranque de estos fallos.

Fallos rearmables manualmente uniquement

Cuando aparece este tipo de fallo, el arrancador se bloquea y el motor pasa a rueda libre.

Señalización:
- Apertura del relé de final de arranque R2.
- Apertura del relé R1.
- Parpadeo del código de fallo en el visualizador mientras está presente el fallo.
- Memorización de los 5 últimos fallos, visibles con el software integrado PowerSuite.

Condiciones de rearranque:
- Desaparición de las causas del fallo.
- Una orden de marcha (control de 2 o 3 hilos, requiere un frente ascendente en la entrada RUN) para rearmar el fallo (1).
- Otra orden de marcha (control de 2 o 3 hilos, requiere un frente ascendente en la entrada RUN) para rearmar el motor.

Fallo visualizado	Posible causa	Procedimiento, solución
SLF	**Fallo del enlace serie**	• Compruebe la conexión de la toma RS485.
EtF	**Fallo externo**	• Comprobar el fallo que se ha tenido en cuenta.
StF	**Arranque demasiado largo**	• Compruebe la mecánica (desgaste, resistencia mecánica, lubricación, obstáculos, etc.). • Compruebe el valor del ajuste tLS en el menú PrO página 301. • Compruebe el dimensionamiento arrancador-motor en relación con las necesidades mecánicas.
OLC	**Sobrecarga de corriente**	• Compruebe la mecánica (desgaste, resistencia mecánica, lubricación, obstáculos, etc.). • Compruebe el valor de los parámetros LOC y tOL en el menú PrO página 302.
OLF	**Fallo térmico del motor**	• Compruebe la mecánica (desgaste, resistencia mecánica, lubricación, obstáculos, etc.). • Compruebe el dimensionamiento arrancador-motor en relación con las necesidades mecánicas. • Compruebe el valor del parámetro tHP en el menú PrO página 301 y el del parámetro In en el menú SEt página 296. • Compruebe que el aislamiento eléctrico del motor es correcto. • Espere a que se enfríe el motor antes de volver a arrancar.
OHF	**Fallo térmico del arrancador**	• Compruebe la mecánica (desgaste, resistencia mecánica, lubricación, obstáculos, etc.). • Compruebe el dimensionamiento del arrancador en relación con el motor y las necesidades mecánicas. • Compruebe si el ventilador funciona correctamente (en caso de que el ATS48 utilizado esté equipado con él), si el aire circula libremente y si el radiador está limpio. Asegúrese de que respeta las precauciones de montaje. • Espere a que se enfríe el motor del ATS48 antes de volver a arrancar.

(1) El rearme por una orden de marcha está inactivo si LI se ha asignado a la función “rearme de fallo (LIr)”.

Fallos rearmables manualmente uniquement

Fallo visualizado	Posible causa	Procedimiento, solución
OtF	**Fallo térmico del motor detectado por las sondas PTC**	• Compruebe la mecánica (desgaste, resistencia mecánica, lubricación, obstáculos, etc.). • Compruebe el dimensionamiento arrancador-motor en relación con las necesidades mecánicas. • Compruebe el valor del parámetro PtC en el menú PrO página 303. • Espere a que se enfríe el motor antes de volver a arrancar.
ULF	**Subcarga del motor**	• Compruebe el circuito hidráulico. • Compruebe el valor de los parámetros LUL y tUL en el menú de protección PrO página 301.
LrF	**Rotor bloqueado** en régimen permanente. Este fallo está activo únicamente en régimen permanente con contactor de by-pass del arrancador. Se detecta si la corriente en una fase es superior o igual a 5 In durante más de 0,2 s.	• Compruebe la mecánica (desgaste, resistencia mecánica, lubricación, obstáculos, etc.).
Err1	Con el terminal de puerta: valore incorrecots de tbr y For	• Configurar tbr = 19,2 y FOr = 8n1o PCt = véase la página 317

Rearme de los fallos por una entrada lógica

Si se ha configurado una entrada lógica LI en “Rearme del fallo térmico del motor” o en “Rearme de los fallos rearmables”, es preciso:
- Pulsar la entrada lógica LI
- En el control de 2 hilos, el motor vuelve a arrancar si la orden de marcha se mantiene en la entrada RUN
- En el control de 3 hilos, el motor vuelve a arrancar con una nueva orden de marcha (frente ascendente) en la entrada RUN

Tablas de memorización configuración/ajustes

Arrancador ATS 48.....
n° identificación cliente eventual.....
Código de acceso eventual.....

Menú Ajustes SEt

Código	Ajuste de fábrica	Ajuste cliente	Código	Ajuste de fábrica	Ajuste cliente
In	(1)		dEC	15 s	
ILt	400%		EdC	20%	
ACC	15 s		brC	50%	
t90	20%		EbA	20%	
StY	-F-				

Los parámetros sombreados aparecen si se han configurado las funciones correspondientes.

Menú Protección PrO

Código	Ajuste de fábrica	Ajuste cliente	Código	Ajuste de fábrica	Ajuste cliente
tHP	10		tOL	10,0	
ULL	OFF		PHr	no	
LUL	60%		tbS	2 s	
tUL	60%		PHL	10%	
tLS	OFF		PtC	OFF	
OIL	OFF		ArS	OFF	
LOC	80%		rtH	no	

Los parámetros sombreados aparecen si se han configurado las funciones correspondientes.

(1) Depende del calibre del arrancador.

Tablas de memorización configuración/ajustes

Menú Ajustes avanzados drC

Código	Ajuste de fábrica	Ajuste cliente	Código	Ajuste de fábrica	Ajuste cliente
tL1	OFF		LSC	50%	
bSt	OFF		tIG	40%	
dLt	OFF		CSC	OFF	
SSt	OFF		ULn	(1)	
CLP	On		FrC	AUt	

Los parámetros sombreados aparecen si se han configurado las funciones correspondientes.

Menú Asignación de entradas / salidas IO

Código	Ajuste de fábrica	Ajuste cliente	Código	Ajuste de fábrica	Ajuste cliente
LI3	LIA		r1	r1I	
LI4	LIL		r3	rn1	
IPr	0%		AO	OCr	
tPr	5 mn		O4	020	
LO1	tA1		ASC	200	
LO2	rn1				

Los parámetros sombreados aparecen si se han configurado las funciones correspondientes.

(1) -ATS 48•••Q: 400 V
-ATS 48•••Y: 460 V

ESPAÑOL

Tablas de memorización configuración/ajustes

Menú Parámetros del 2º motor St2

Este menú sólo se puede ver si se ha asignado una entrada lógica a la función de activación del segundo juego de parámetros del motor (LIS) en el menú Asignación de entradas / salidas I O.

Código	Ajuste de fábrica	Ajuste cliente	Código	Ajuste de fábrica	Ajuste cliente
In2	(1)		dE2	15 s	
IL2	400%		Ed2	20%	
AC2	15 s		tL2	OFF	
t92	20%		t I2	40%	

Menú Comunicación COP

Código	Ajuste de fábrica	Ajuste cliente	Código	Ajuste de fábrica	Ajuste cliente
Add	0		tLP	5 s	
tbr	19,2 kBits / s		PCt	OFF	
FOr	8n1				

(1) Depende del calibre del arrancador.

In generale qualsiasi intervento, sia sulla parte elettrica che su quella meccanica dell'impianto o della macchina, deve essere preceduto dall'interruzione dell'alimentazione controllo (CL1 - CL2) e potenza (1/L1 - 3/L2 - 5/L3) dell'Altistart 48.
In fase d'impiego il motore può essere fermato interrompendo gli ordini di marcia anche con l'avviatore sotto tensione. Se per la sicurezza del personale è necessario impedire qualsiasi riavviamento intempestivo questo blocco elettronico è insufficiente: prevedere un dispositivo di interruzione sul circuito di potenza.

L'avviatore è dotato di dispositivi di sicurezza che in caso di funzionamento difettoso possono comandare l'arresto dell'avviatore e del motore. Quest'ultimo può fermarsi anche in seguito a blocco meccanico. Altre cause di arresto possono essere rappresentate dalle variazioni di tensione e dalle interruzioni di alimentazione.
L'eliminazione delle cause di arresto può determinare un riavviamento pericoloso per alcune macchine o impianti, in particolare per quelle che devono essere conformi alle normative specifiche in materia di sicurezza.
È quindi importante che in questi casi l'utente si premunisca contro la possibilità di riavviamenti utilizzando un rilevatore di bassa velocità che provoca, in caso di arresto non programmato del motore, l'interruzione dell'alimentazione dell'avviatore.

I prodotti e i materiali presentati in questo manuale sono suscettibili di evoluzioni o modifiche in qualsiasi momento, sia per quanto concerne gli aspetti tecnici che le modalità d'impiego. La loro descrizione non può pertanto rivestire in alcun caso un aspetto contrattuale.

L'installazione e la messa in opera dell'avviatore devono essere effettuate in conformità con le norme internazionali IEC le norme nazionali vigenti nel Paese d'impiego. L'installatore è responsabile della messa in conformità dell'apparecchio e del rispetto, per quanto riguarda la Comunità Europea, della direttiva EMC.
Il rispetto dei requisiti essenziali della direttiva EMC è condizionato all'applicazione di quanto specificato nel presente manuale d'impiego.

L'Altistartþ48 deve essere considerato un componente, dal momento che in base alle direttive europee (direttiva macchine e direttiva compatibilità elettromagnetica) non si tratta né di una macchina né di un'apparecchiatura pronta all'impiego. La responsabilità di garantire la conformità della macchina a queste norme è a carico dell'utente finale.

Sommario

Le fasi della messa in opera 334
Configurazione di base 336
Consigli preliminari 337
Caratteristiche tecniche 338
Consigli di impiego 339
Associazione avviatore-motore 342
Dimensioni di ingombro 348
Consigli di montaggio 350
Montaggio in cassetta o armadio 351
Morsettiere potenza 352
Morsettiere controllo 357
Cablaggio / Comandi RUN - STOP 358
Schema di applicazione 359
Protezioni termiche 369
Display e programmazione 373
Opzione terminale remotato 376
Menu Regolazioni SEt 377
Menu Protezione PrO 382
Menu Regolazioni avanzate drC 386
Menu Configurazione degli ingressi/uscite IO 390
Menu Parametri 2° motore St2 394
Menu Comunicazione COP 398
Menu Parametro visualizzato SUP 400
Tabella di compatibilità 403
Manutenzione 404
Difetti - cause - procedure d'intervento 405
Tabelle di memorizzazione configurazione/regolazioni 411

1 - Ricevimento del Altistart 48

- Assicurarsi che il riferimento dell'avviatore riportato sull'etichetta sia conforme a quanto indicato sulla bolla di consegna e sull'ordine
- Aprire l'imballo e verificare che l'Altistart 48 non sia stato danneggiato durante il trasporto

.

⚠ AVVERTENZA

AVVIATORE PROGRESSIVO DANNEGGIATO

Non usare o installare l'avviatore o qualunque suo accessorio se apparentemente danneggiato.
La mancata osservanza di queste istruzioni può causare danni all'apparecchiatura.

2 - Montaggio del variatore in posizione verticale

- Installare l'Altistart 48 seguendo i consigli riportati **a pagina 350 e pagina 351.**

3 - Collegare all'Altistart 48:

- Collegare l'avviatore statico a terra.
- La rete di alimentazione controllo (CL1 - CL2), assicurandosi che sia fuori tensione
- La rete di alimentazione potenza (1/L1 - 3/L2 - 5/L3), assicurandosi che sia fuori tensione
- Il motore (2/T1 - 4/T2 - 6/T3) assicurandosi che gli avvolgimenti motore siano collegati secondo la tensione della rete di alimentazione

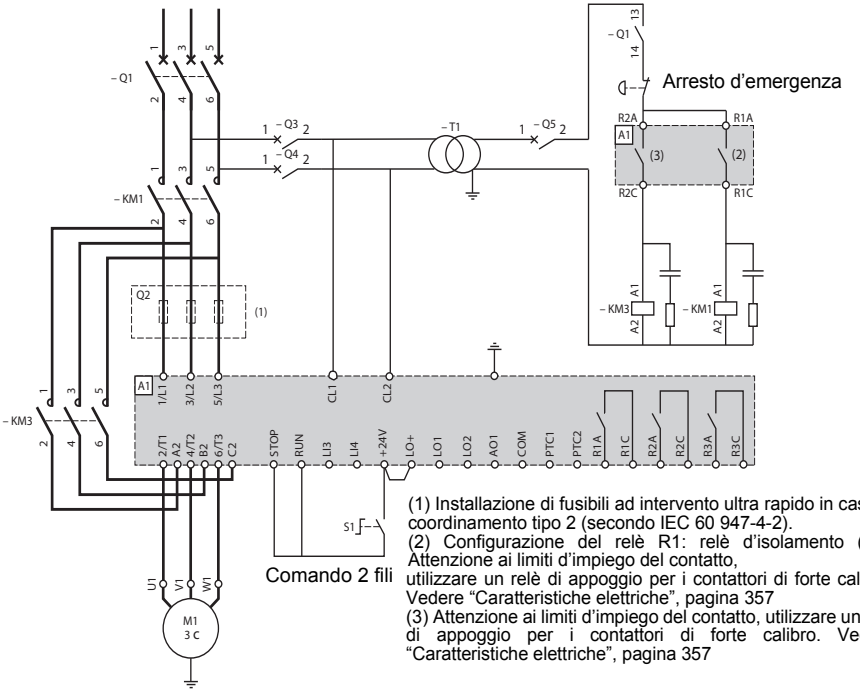

(1) Installazione di fusibili ad intervento ultra rapido in caso di coordinamento tipo 2 (secondo IEC 60 947-4-2).
(2) Configurazione del relè R1: relè d'isolamento (r1l). Attenzione ai limiti d'impiego del contatto, utilizzare un relè di appoggio per i contattori di forte calibro. Vedere "Caratteristiche elettriche", pagina 357
(3) Attenzione ai limiti d'impiego del contatto, utilizzare un relè di appoggio per i contattori di forte calibro. Vedere "Caratteristiche elettriche", pagina 357

Nota: Per schemi di collegamento, vedere **pagina 359** a **pagina 363**

In caso di un impiego dell'ATS48●●●Q o ATS48●●●YS316 con collegamento a triangolo del motore seguire iconsigli riportati a **pagina 340**, **pagina 341** e schemi **pagina 361**.

ITALIANO

4 - Mettere sotto tensione la parte controllo (CL1-CL2)

- Accensione senza i componenti di alimentazione e senza il comando di marcia.
- Controllare che S1 è aperto.
- Chiudere: Q1, poi Q3, poi Q4.
- Il display dell'avviatore visualizza: nLP (per segnalare che la parte potenza è fuori tensione)

.

ATTENZIONE

RISCHIO DI DANNI ALL'AVVIATORE

- Controllare l'alimentazione su CL1 - CL2:
  ATS48●●●Q: 220 - 415 V AC
  ATS48●●●Y: 110 - 230 V AC

Il mancato rispetto di queste istruzioni può provocare danni alle apparecchiature

5 - Regolare In Corrente nominale motore

- Regolare il valore della corrente nominale motore indicata sulla targa motore,

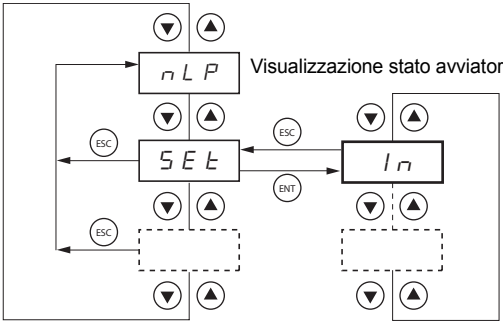

6 - Mettere sotto tensione la parte potenza (1/L1 - 3/L2 - 5/L3)

- Accendere: Q5.
- Il display dell'avviatore visualizza: rdY (per segnalare che l'avviatore è sotto tensione e pronto).

7 - Avvio del motore

- Premere S1, per avviare il motore.

8 - Informazioni sulla risoluzione dei problemi

- Vedere Difetti - cause - procedure d'intervento **pagina 405**

ATTENZIONE

PERICOLO DI SURRISCALDAMENTO DEL MOTORE

L'avviatore ATS 48 è preconfigurato di base per poter avviare un motore in un'applicazione standard che non richiede funzioni specifiche con classe di protezione motore: classe 10.
La modifica delle regolazioni resta possibile seguendo il metodo di accesso ai parametri, **pagina 374.**
In tutti i casi il parametro In deve essere regolato al valore di corrente indicato sulla targa motore.
Il mancato rispetto di queste istruzioni può provocare danni alle apparecchiature

Preregolazioni

L'Altistart 48 è preregolato di base per le condizioni d'impiego più comuni e frequenti:

- Utilizzo dell'ATS 48 sulla rete di alimentazione del motore (e non inserito nel "triangolo" degli avvolgimenti del motore)

- Corrente nominale motore In:
  - ATS 48 •••Q: preregolata per un motore standard 400 volt 4 poli
  - ATS 48 •••Y: preregolata alla corrente NEC, motore 460 volt

- Corrente di limitazione (ILt): 400% della corrente In del motore

- Rampa di accelerazione (ACC): 15 secondi

- Coppia inziale all'avviamento (tq0): 20% della coppia nominale

- Arresto (StY): Arresto ruota libera (-F-)

- Protezione termica motore (tHP): curva di protezione classe 10

- Visualizzazione: rdY (Avviatore pronto) con tensioni potenza e controllo presenti, corrente motore in funzionamento

- Ingressi logici:
  - LI1: STOP
  - LI2: RUN
  - LI3: Forzatura arresto ruota libera (LIA)
  - LI4: Forzatura modo locale (LIL)

- Uscite logiche:
  - LO1: Allarme termico motore (tA1)
  - LO2: Motore alimentato (rnI)

- Uscite relè:
  - R1: Relè di difetto (r1I)
  - R2: Relè di by-pass a fine avviamento
  - R3: Motore alimentato (rnI)

- Uscita analogica:
  - AO: Corrente motore (OCr, 0 - 20 mA)

- Parametri di comunicazione:
  - Collegato tramite collegamento seriale, l'indirizzo logico dell'avviatore è (Add) = « 0 »
  - Velocità di trasmissione (tbr): 19200 bit al secondo
  - Formato di comunicazione (FOr): 8 bit, senza parità, 1 bit di stop (8n1)

Se i valori sopra indicati sono compatibili con l'applicazione l'avviatore può essere utilizzato senza modifica delle regolazioni.

Manutenzione e immagazzinaggio

Per assicurare la protezione dell'avviatore prima della sua installazione si consiglia di spostare e immagazzinare l'apparecchio nel suo imballo originale.

Installazione

La gamma Altistart 48 comprende 6 taglie diverse, di pesi e dimensioni differenti.

Gli avviatori di piccole dimensioni possono essere estratti dal loro imballo originale e installati senza l'impiego di particolari sistemi per la movimentazione.

Al contrario gli avviatori di grandi dimensioni richiedono l'utilizzo di un sistema per la movimentazione e a questo scopo sono dotati di appositi ganci. Rispettare quanto indicato nell'illustrazione qui di seguito riportata:

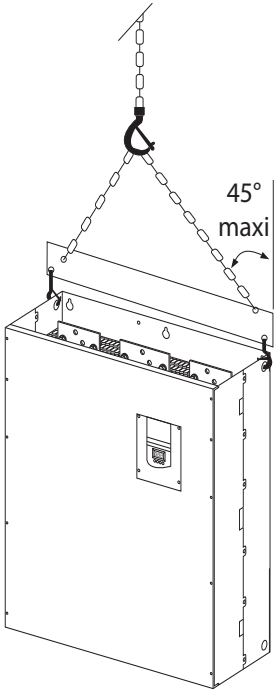

Non maneggiare in alcun caso l'avviatore dalle barre potenza

Caratteristiche tecniche

Caratteristiche generali

Grado di protezione	• IP20 per ATS 48D17• a C11• • IP00 per ATS 48C14• a M12• (1)
Tenuta alle vibrazioni	Secondo IEC 68-2-6: • 1,5 mm cresta da 2 a 13 Hz • 1 gn da 13 a 200 Hz
Tenuta agli urti	Secondo IEC 68-2-27: • 15 gn, 11 ms
Inquinamento ambientale max	Gradoþ3 secondo IEC 947-4-2.
Umidità relativa max	93 % senza condensa né gocciolamento, secondo IEC 68-2-3
Temperatura ambiente vicino all'apparecchio	Per immagazzinaggio: da - 25 °C a +70 °C Per funzionamento: • da - 10 °C a + 40 °C senza declassamento • fino a + 60 °C declassando la corrente del 2 % per °C oltre i 40 °C
Altitudine massima d'impiego	1000 m senza declassamento (oltre i 1000 m declassare la corrente dello 2 % ogni 100 m aggiuntivi)
Posizione di funzionamento	Verticale a ± 10 °

(1) Gli avviatori ATS 48 con grado di protezione IP00 devono essere dotati di una barriera di protezione per garantire la sicurezza delle persone contro i contatti elettrici.

Consigli di impiego

Coppia disponibile

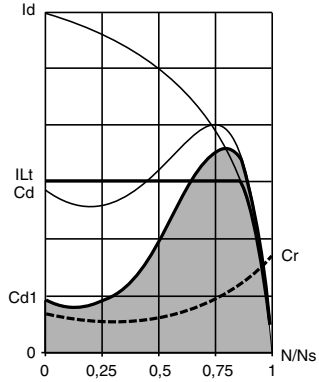

Le curve Cd e Id rappresentano l'avviamento di un motore asincrono su rete.

La curva Cd1 mostra l'evoluzione della coppia disponibile con un ATS 48, in funzione della corrente di limitazione ILt.
La progressività dell'avviamento si ottiene controllando la coppia di accelerazione durante questa evoluzione.

Cr: coppia resistente, che deve essere sempre inferiore alla coppia Cd1.

Scelta dell'avviatore-rallentatore

Un servizio motore S1 corrisponde ad un avviamento seguito da un funzionamento a carico costante che consente il raggiungimento dell'equlibrio termico.
Un servizio motore S4 corrisponde ad un ciclo comprendente un avviamento, un funzionamento a carico costante ed un tempo di riposo. Questo ciclo è caratterizzato da un fattore di marcia.

L'Altistart 48 deve essere scelto in funzione del tipo di applicazione "standard" o "severa" e della potenza nominale del motore. Le applicazioni "standard" o "severa" definiscono i valori limite di corrente e di ciclo per i servizi motore S1 e S4.

Attenzione: non utilizzare l'Altistart 48 a monte di utenze diverse dai motori (non utilizzare mai trasformatori o resistenze). Non collegare condensatori di compensazione del fattore di potenza ai morsetti di un motore comandato da un Altistart 48

Applicazione standard

Esempio: pompa centrifuga.
In applicazione standard l'Altistart 48 è dimensionato per rispondere a:
- in servizio S1: un avviamento a 4 In per 23 secondi o un avviamento a 3 In per 46 secondi, partendo dallo stato a freddo.
- in servizio S4: un fattore di marcia del 50 % e 10 avviamenti all'ora, con 3 In per 23 secondi o 4 In per 12 secondi o un ciclo termico equivalente.

In questo caso la protezione termica motore deve essere in classe 10.

Applicazione severa

Esempio: frantumatore.
In applicazione severa l'Altistart 48 è dimensionato per rispondere ad un servizio S4 con un fattore di marcia del 50 % e 5 avviamenti all'ora, a 4 In per 23 secondi o un ciclo termico equivalente.
In questo caso la protezione termica motore deve essere in classe 20. La corrente **In non deve restare alla preregolazione di base**, ma essere regolata al valore riportato sulla targa motore.

Nota: è possibile surclassare l'avviatore scegliendo ad esempio un ATS 48D17Q per un motore 11 kW - 400V in servizio motore S4.
Per fare questo by-passare l'Altistart a fine avviamento. Questo consente 10 avviamenti all'ora a 3 In per 23 secondi al massimo o equivalente con protezione termica motore in classe 10.

Altistart 48 gamma Q (230-415 V) collegato in linea con il motore o nell'avvolgimento a triangolo del motore

Altistart 48 collegato sulla linea di alimentazione del motore

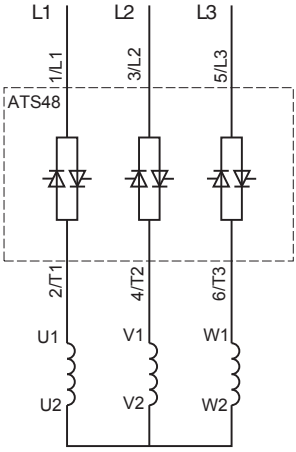

Il collegamento motore dipende dalla tensione di alimentazione, **qui a stella**

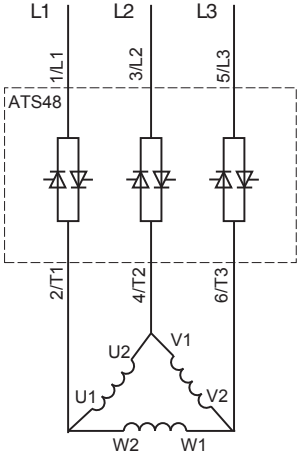

Il collegamento motore dipende dalla tensione di alimentazione,
qui a triangolo

Altistart 48 collegato nell'avvolgimento a triangolo del motore in serie con ogni avvolgimento

Gli avviatori ATS48●●●Q o ATS48●●●YS316 associati a motori collegati a triangolo possono essere inseriti in serie negli avvolgimenti del motore. In tal modo sono sottoposti ad una corrente inferiore alla corrente in linea in un rapporto √3, cosa che consente di utilizzare un avviatore di calibro inferiore.

Questa configurazione può essere impostata nel menu Regolazioni avanzate (dLt = On).
Le regolazioni della corrente nominale e della corrente di limitazione, così come la corrente visualizzata in funzionamento restano i valori in linea, evitandone il calcolo all'utilizzatore.

LIl montaggio dell'Altistart 48 collegato sull'avvolgimento a triangolo del motore è possibile solo per gli avviatori ATS48●●●Q o ATS48●●●YS316. Questo tipo di montaggio:
- no frenatura dinamica
- è incompatibile con la funzione avviamento in cascata
- è incompatibile con la funzione preriscaldamento

Vedere le tabelle a pagina 342 per definire l'associazione avviatore-motore.

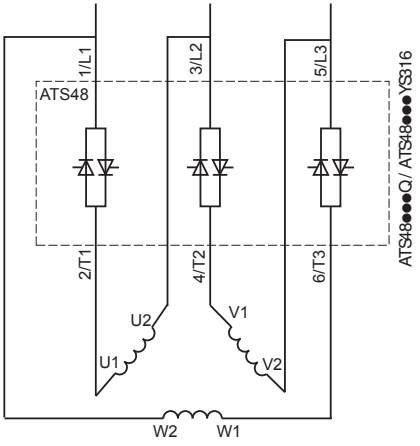

Collegamento nell'avvolgimento a triangolo del motore

Esempio:
Prendiamo in considerazione un motore 400 V da 110 kW con una corrente di linea di 195 A (corrente indicata per il collegamento a triangolo).
La corrente in ciascun avvolgimento è uguale a 195/1,7 ovvero 114 A.
Si sceglierà l'avviatore con corrente nominale massima permanente subito al di sopra di questo valore di corrente ovvero il calibro 140 A (ATS48C14Q per un'applicazione standard).
Per evitare questo calcolo utilizzare le tabelle a pagina 344 e 345 che indicano direttamente il calibro dell'avviatore corrispondente alla potenza motore in funzione del tipo di applicazione.

Applicazione in servizio standard, rete 230 / 415 V, avviatore sulla linea

Motore		Avviatore 230 / 415 V (+ 10 % - 15 %) - 50 / 60 Hz		
Potenza motorer		Corrente max permanente in classe 10	Calibro ICL	Riferimento avviatore
230 V	400 V			
kW	**kW**	**A**	**A**	
4	7,5	17	17	ATS 48D17Q
5,5	11	22	22	ATS 48D22Q
7,5	15	32	32	ATS 48D32Q
9	18,5	38	38	ATS 48D38Q
11	22	47	47	ATS 48D47Q
15	30	62	62	ATS 48D62Q
18,5	37	75	75	ATS 48D75Q
22	45	88	88	ATS 48D88Q
30	55	110	110	ATS 48C11Q
37	75	140	140	ATS 48C14Q
45	90	170	170	ATS 48C17Q
55	110	210	210	ATS 48C21Q
75	132	250	250	ATS 48C25Q
90	160	320	320	ATS 48C32Q
110	220	410	410	ATS 48C41Q
132	250	480	480	ATS 48C48Q
160	315	590	590	ATS 48C59Q
(1)	355	660	660	ATS 48C66Q
220	400	790	790	ATS 48C79Q
250	500	1000	1000	ATS 48M10Q
355	630	1200	1200	ATS 48M12Q

La corrente nominale motore In non deve superare la corrente max permanente in classe 10.
(1) Valore non indicato dal momento che non esiste un motore normalizzato corrispondente.

Declassamento in temperatura

La tabella sopra riportata tiene conto di un impiego ad una temperatura ambiente di 40 °C max.
L'ATS 48 può essere utilizzato fino ad una temperatura ambiente di 60 °C a condizione che venga applicato alla corrente max permanente in classe 10 un declassamento del 2 % per grado al di sopra dei 40 °C.
Esempio: ATS 48D32Q a 50 °C declassamento di 10 x 2 % = 20 %, 32 A passa a 32 x 0,8 = 25,6 A (corrente nominale motore max).

Applicazione in servizio severo, rete 230 / 415 V, avviatore sulla linea

Motore		Avviatore 230 / 415 V (+ 10 % - 15 %) - 50 / 60 Hz		
Potenza motore		Corrente max permanente in classe 20	Calibro ICL	Riferimento avviatore
230 V	400 V			
kW	**kW**	**A**	**A**	
3	5,5	12	17	ATS 48D17Q
4	7,5	17	22	ATS 48D22Q
5,5	11	22	32	ATS 48D32Q
7,5	15	32	38	ATS 48D38Q
9	18,5	38	47	ATS 48D47Q
11	22	47	62	ATS 48D62Q
15	30	62	75	ATS 48D75Q
18,5	37	75	88	ATS 48D88Q
22	45	88	110	ATS 48C11Q
30	55	110	140	ATS 48C14Q
37	75	140	170	ATS 48C17Q
45	90	170	210	ATS 48C21Q
55	110	210	250	ATS 48C25Q
75	132	250	320	ATS 48C32Q
90	160	320	410	ATS 48C41Q
110	220	410	480	ATS 48C48Q
132	250	480	590	ATS 48C59Q
160	315	590	660	ATS 48C66Q
(1)	355	660	790	ATS 48C79Q
220	400	790	1000	ATS 48M10Q
250	500	1000	1200	ATS 48M12Q

La corrente nominale motore In non deve superare la corrente max permanente in classe 20.
(1) Valore non indicato dal momento che non esiste un motore normalizzato corrispondente.

Declassamento in temperatura

La tabella sopra riportata tiene conto di un impiego ad una temperatura ambiente di 40 °C max.
L'ATS 48 può essere utilizzato fino ad una temperatura ambiente di 60 °C a condizione che venga applicato alla corrente max permanente in classe 20 un declassamento del 2 % per grado al di sopra dei 40 °C.
Esempio: ATS 48D32Q a 50 °C declassamento di 10 x 2 % = 20 %, 22 A passa a 22 x 0,8 = 17,6 A (corrente nominale motore max)

Applicazione in servizio standard, rete 230 / 415 V, avviatore nel triangolo

Motore		Avviatori 230 / 415 V (+ 10 % - 15 %) - 50 / 60 Hz		
Potenza motore		Corrente max permanente in classe 10	Calibreo ICL	Riferimento avviatore
230 V	400 V			
kW	**kW**	**A**	**A**	
7,5	15	29	29	ATS 48D17Q
9	18,5	38	38	ATS 48D22Q
15	22	55	55	ATS 48D32Q
18,5	30	66	66	ATS 48D38Q
22	45	81	81	ATS 48D47Q
30	55	107	107	ATS 48D62Q
37	55	130	130	ATS 48D75Q
45	75	152	152	ATS 48D88Q
55	90	191	191	ATS 48C11Q
75	110	242	242	ATS 48C14Q
90	132	294	294	ATS 48C17Q
110	160	364	364	ATS 48C21Q
132	220	433	433	ATS 48C25Q
160	250	554	554	ATS 48C32Q
220	315	710	710	ATS 48C41Q
250	355	831	831	ATS 48C48Q
(1)	400	1022	1022	ATS 48C59Q
315	500	1143	1143	ATS 48C66Q
355	630	1368	1368	ATS 48C79Q
(1)	710	1732	1732	ATS 48M10Q
500	(1)	2078	2078	ATS 48M12Q

La corrente nominale motore In non deve superare la corrente max permanente in classe 10.
(1) Valore non indicato dal momento che non esiste un motore normalizzato corrispondente.

Declassamento in temperatura

La tabella sopra riportata tiene conto di un impiego ad una temperatura ambiente di 40 °C max.
L'ATS 48 può essere utilizzato fino ad una temperatura ambiente di 60 °C a condizione che venga applicato alla corrente max permanente in classe 10 un declassamento del 2 % per grado al di sopra dei 40 °C.
Esempio: ATS 48D32Q a 50 °C declassamento di 10 x 2 % = 20 %, 55 A passa a 55 x 0,8 = 44 A (corrente nominale motore max)

Applicazione in servizio severo, rete 230 / 415 V, avviatore nel triangolo

Motore		Avviatore 230 / 415 V (+ 10 % - 15 %) - 50 / 60 Hz		
Potenza motore		Corrente max permanente in classe 20	Calibro ICL	Riferimento avviatore
230 V	400 V			
kW	**kW**	**A**	**A**	
5,5	11	22	29	ATS 48D17Q
7,5	15	29	38	ATS 48D22Q
9	18,5	38	55	ATS 48D32Q
15	22	55	66	ATS 48D38Q
18,5	30	66	81	ATS 48D47Q
22	45	81	107	ATS 48D62Q
30	55	107	130	ATS 48D75Q
37	55	130	152	ATS 48D88Q
45	75	152	191	ATS 48C11Q
55	90	191	242	ATS 48C14Q
75	110	242	294	ATS 48C17Q
90	132	294	364	ATS 48C21Q
110	160	364	433	ATS 48C25Q
132	220	433	554	ATS 48C32Q
160	250	554	710	ATS 48C41Q
220	315	710	831	ATS 48C48Q
250	355	831	1022	ATS 48C59Q
(1)	400	1022	1143	ATS 48C66Q
315	500	1143	1368	ATS 48C79Q
355	630	1368	1732	ATS 48M10Q
(1)	710	1732	2078	ATS 48M12Q

La corrente nominale motore In non deve superare la corrente max permanente in classe 20.
(1) Valore non indicato dal momento che non esiste un motore normalizzato corrispondente.

Declassamento in temperatura

La tabella sopra riportata tiene conto di un impiego ad una temperatura ambiente di 40 °C max.
L'ATS 48 può essere utilizzato fino ad una temperatura ambiente di 60 °C a condizione che venga applicato alla corrente max permanente in classe 20 un declassamento del 2 % per grado al di sopra dei 40 °C.
Esempio: ATS 48D32Q a 50 °C declassamento di 10 x 2 % = 20 %, 38 A passa a 38 x 0,8 = 30,4 A (corrente nominale motore max).

Applicazione in servizio standard, rete 208 / 690 V, avviatore sulla linea

Motore							Avviatore 208 / 690 V (+ 10 % - 15 %) - 50 / 60 Hz		
Potenza motore							Correntet max permanente in classe 10	Calibro ICL	Riferimento avviatore
208 V	230 V	440 V	460 V	500 V	575 V	690 V			
HP	**HP**	**kW**	**HP**	**kW**	**HP**	**kW**	**A**	**A**	
3	5	7,5	10	9	15	15	17	17	ATS 48D17Y
5	7,5	11	15	11	20	18,5	22	22	ATS 48D22Y
7,5	10	15	20	18,5	25	22	32	32	ATS 48D32Y
10	(1)	18,5	25	22	30	30	38	38	ATS 48D38Y
(1)	15	22	30	30	40	37	47	47	ATS 48D47Y
15	20	30	40	37	50	45	62	62	ATS 48D62Y
20	25	37	50	45	60	55	75	75	ATS 48D75Y
25	30	45	60	55	75	75	88	88	ATS 48D88Y
30	40	55	75	75	100	90	110	110	ATS 48C11Y
40	50	75	100	90	125	110	140	140	ATS 48C14Y
50	60	90	125	110	150	160	170	170	ATS 48C17Y
60	75	110	150	132	200	200	210	210	ATS 48C21Y
75	100	132	200	160	250	250	250	250	ATS 48C25Y
100	125	160	250	220	300	315	320	320	ATS 48C32Y
125	150	220	300	250	350	400	410	410	ATS 48C41Y
150	(1)	250	350	315	400	500	480	480	ATS 48C48Y
(1)	200	355	400	400	500	560	590	590	ATS 48C59Y
200	250	400	500	(1)	600	630	660	660	ATS 48C66Y
250	300	500	600	500	800	710	790	790	ATS 48C79Y
350	350	630	800	630	1000	900	1000	1000	ATS 48M10Y
400	450	710	1000	800	1200	(1)	1200	1200	ATS 48M12Y

La corrente nominale motore In non deve superare la corrente max permanente in classe 10.
(1) Valore non indicato dal momento che non esiste un motore normalizzato corrispondente.

Declassamento in temperatura

La tabella sopra riportata tiene conto di un impiego ad una temperatura ambiente di 40 °C max.
L'ATS 48 può essere utilizzato fino ad una temperatura ambiente di 60 °C a condizione che venga applicato alla corrente max permanente in classe 10 un declassamento del 2 % per grado al di sopra dei 40 °C.
Esempio: ATS 48D32Y a 50 °C declassamento di 10 x 2 % = 20 %, 32 A passa a 32 x 0,8 = 25,6 A (corrente nominale motore max).

Applicazione in servizio severo, rete 208 / 690 V, avviatore sulla linea

Motore							Avviatore 208 / 690 V (+ 10 % - 15 %) - 50 / 60 Hz		
Potenza motore							Corrente max permanente in classe 20	Calibro ICL	Riferimento avviatore
208 V	230 V	440 V	460 V	500 V	575 V	690 V			
HP	**HP**	**kW**	**HP**	**kW**	**HP**	**kW**	**A**	**A**	
2	3	5,5	7,5	7,5	10	11	12	17	ATS 48D17Y
3	5	7,5	10	9	15	15	17	22	ATS 48D22Y
5	7,5	11	15	11	20	18,5	22	32	ATS 48D32Y
7,5	10	15	20	18,5	25	22	32	38	ATS 48D38Y
10	(1)	18,5	25	22	30	30	38	47	ATS 48D47Y
(1)	15	22	30	30	40	37	47	62	ATS 48D62Y
15	20	30	40	37	50	45	62	75	ATS 48D75Y
20	25	37	50	45	60	55	75	88	ATS 48D88Y
25	30	45	60	55	75	75	88	110	ATS 48C11Y
30	40	55	75	75	100	90	110	140	ATS 48C14Y
40	50	75	100	90	125	110	140	170	ATS 48C17Y
50	60	90	125	110	150	160	170	210	ATS 48C21Y
60	75	110	150	132	200	200	210	250	ATS 48C25Y
75	100	132	200	160	250	250	250	320	ATS 48C32Y
100	125	160	250	220	300	315	320	410	ATS 48C41Y
125	150	220	300	250	350	400	410	480	ATS 48C48Y
150	(1)	250	350	315	400	500	480	590	ATS 48C59Y
(1)	200	355	400	400	500	560	590	660	ATS 48C66Y
200	250	400	500	(1)	600	630	660	790	ATS 48C79Y
250	300	500	600	500	800	710	790	1000	ATS 48M10Y
350	350	630	800	630	1000	900	1000	1200	ATS 48M12Y

La corrente nominale motore In non deve superare la corrente max permanente in classe 20.
(1) Valore non indicato dal momento che non esiste un motore normalizzato corrispondente.

Declassamento in temperatura

La tabella sopra riportata tiene conto di un impiego ad una temperatura ambiente di 40 °C max.
L'ATS 48 può essere utilizzato fino ad una temperatura ambiente di 60 °C a condizione che venga applicato alla corrente max permanente in classe 20 un declassamento del 2 % per grado al di sopra dei 40 °C.
Esempio: ATS 48D32Y a 50 °C declassamento di 10 x 2 % = 20 %, 22 A passa a 22 x 0,8 = 17,6 A (corrente nominale motore max).

Dimensioni di ingombro

ATS 48D17 • …C66 •

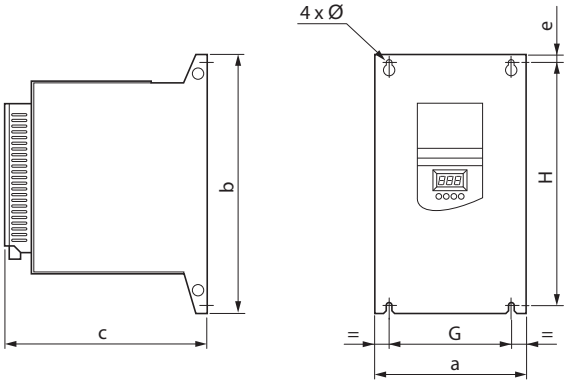

ATS 48	a mm	b mm	c mm	e mm	G mm	H mm	Ø mm	Masse kg
D17Q, D17Y D22Q, D22Y D32Q, D32Y D38Q, D38Y D47Q, D47Y	160	275	190	6,6	100	260	7	4,9
D62Q, D62Y D75Q, D75Y D88Q, D88Y C11Q, C11Y	190	290	235	10	150	270	7	8,3
C14Q, C14Y C17Q, C17Y	200	340	265	10	160	320	7	12,4
C21Q, C21Y C25Q, C25Y C32Q, C32Y	320	380	265	15	250	350	9	18,2
C41Q, C41Y C48Q, C48Y C59Q, C59Y C66Q, C66Y	400	670	300	20	300	610	9	51,4

Dimensioni di ingombro

ATS 48C79 • …M12 •

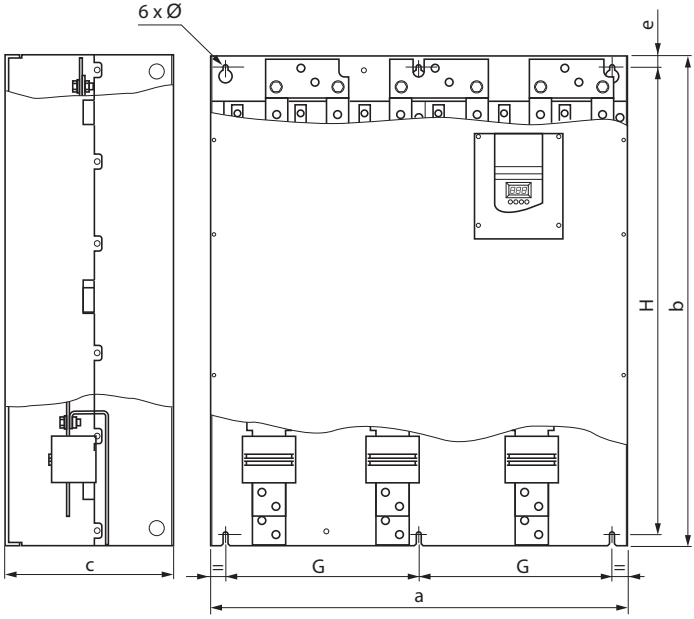

ATS 48	a mm	b mm	c mm	e mm	G mm	H mm	Ø mm	Masse kg
C79Q, C79Y M10Q, M10Y M12Q, M12Y	770	890	315	20	350	850	11	115

Consigli di montaggio

Installare l'apparecchio in posizione verticale, ± 10°.

Evitare di collocare l'avviatore vicino a fonti di calore.

Lasciare attorno all'apparecchio uno spazio libero sufficiente a consentire la circolazione dell'aria necessaria al raffreddamento, che avviene mediante ventilazione dal basso verso l'alto.

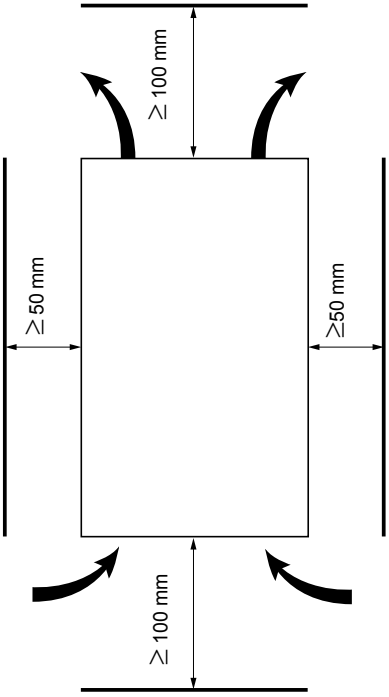

Controllare che all'interno dell'avviatore non penetrino liquidi, polveri od oggetti conduttori (grado di protezione IP00 dalla parte superiore)

Ventilazione dell'avviatore

Negli avviatori dotati di ventilatore di raffreddamento questo viene alimentato automaticamente quando la temperatura del radiatore raggiunge i 50 °C, mentre viene messo fuori tensione quando la temperatura scende nuovamente a 40 °C.

Portata dei ventilatori:

ATS 48 D32 • e D38 •	: 14 m^3/ora
ATS 48 D47 •	: 28 m^3/ora
Da ATS 48 D62 • a C11 •	: 86 m^3/ora
Da ATS 48 C14 • e C17 •	: 138 m^3/ora
Da ATS 48 C21 • a C32 •	: 280 m^3/ora
Da ATS 48 C41 • a C66 •	: 600 m^3/ora
Da ATS 48 C79 • a M12 •	: 1200 m^3/ora

Montaggio in cassetta o armadio

Cassetta o armadio metallico con grado di protezione IP23

Rispettare i consigli di montaggio indicati nella pagina precedente.

Per garantire una buona circolazione dell'aria all'interno dell'avviatore:

- prevedere delle bocchette di ventilazione,
- assicurarsi che la ventilazione sia sufficiente, altrimenti prevedere una ventilazione forzata con filtro.

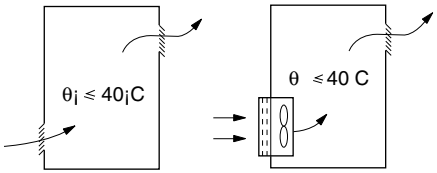

Potenza dissipata dagli avviatori, senza by-pass, alla corrente nominale corrispondente

Riferimento avviatore ATS 48	Potenza in W	Riferimento avviatore ATS 48	Potenza in W
D17Q, D17Y	59	C21Q, C21Y	580
D22Q, D22Y	74	C25Q, C25Y	695
D32Q, D32Y	104	C32Q, C32Y	902
D38Q, D38Y	116	C41Q, C41Y	1339
D47Q, D47Y	142	C48Q, C48Y	1386
D62Q, D62Y	201	C59Q, C59Y	1731
D75Q, D75Y	245	C66Q, C66Y	1958
D88Q, D88Y	290	C79Q, C79Y	2537
C11Q, C11Y	322	M10Q, M10Y	2865
C14Q, C14Y	391	M12Q, M12Y	3497
C17Q, C17Y	479		

Nota: Quando gli avviatori sono in by-pass la potenza dissipata è irrilevante (tra 15 e 30 W).

- Assorbimento parte controllo (tutti i calibri): 25 W senza ventilatori
- Assorbimento controllo con ventilatori:

Avviamentoprogressivo	Assorbimento (W)	Potenza apparente (VA)
ATS 48D17● to C17●	30	80
ATS 48C21● to C32●	50	130
ATS 48C41● to M12●	80	240

Morsettiere potenza

Morsetti	Funzioni	Capacità max di collegamento Coppia di serraggio dei morsetti					
		ATS 48 D17 • D22 • D32 • D38 • D47 •	ATS 48 D62 • D75 • D88 • C11 •	ATS 48 C14 • C17 •	ATS 48 C21 • C25 • C32 •	ATS 48 C41 • C48 • C59 • C66 •	ATS 48 C79 • M10 • M12 •
⏚	Prese di terra collegate alla terra	10 mm^2 1,7 N.m	16 mm^2 3 N.m	120 mm^2 27 N.m	120 mm^2 27 N.m	240 mm^2 27 N.m	2x240 mm^2 27 N.m
		8 AWG 15 lb.in	4 AWG 26 lb.in	Bus Bar 238 lb.in	Bus Bar 238 lb.in	Bus Bar 238 lb.in	Bus Bar 238 lb.in
1/L1 3/L2 5/L3	Alimentazione potenza	16 mm^2 3 N.m	50 mm^2 10 N.m	95 mm^2 34 N.m	240 mm^2 34 N.m	2x240 mm^2 57 N.m	4x240 mm^2 57 N.m
		8 AWG 26 lb.in	2/0 AWG 88 lb.in	2/0 AWG 300 lb.in	Bus Bar 300 lb.in	Bus Bar 500 lb.in	Bus Bar 500 lb.in
2/T1 4/T2 6/T3	Uscite verso il motore	16 mm^2 3 N.m	50 mm^2 10 N.m	95 mm^2 34 N.m	240 mm^2 34 N.m	2x240 mm^2 57 N.m	4x240 mm^2 57 N.m
		8 AWG 26 lb.in	2/0 AWG 88 lb.in	2/0 AWG 300 lb.in	Bus Bar 300 lb.in	Bus Bar 500 lb.in	Bus Bar 500 lb.in
A2 B2 C2	By-pass avviatorer	16 mm^2 3 N.m	50 mm^2 10 N.m	95 mm^2 34 N.m	240 mm^2 34 N.m	2x240 mm^2 57 N.m	4x240 mm^2 57 N.m
		8 AWG 26 lb.in	2/0 AWG 88 lb.in	2/0 AWG 300 lb.in	Bus Bar 300 lb.in	Bus Bar 500 lb.in	Bus Bar 500 lb.in

Disposizione dei morsetti potenza, da ATS 48D17 • a C11 •

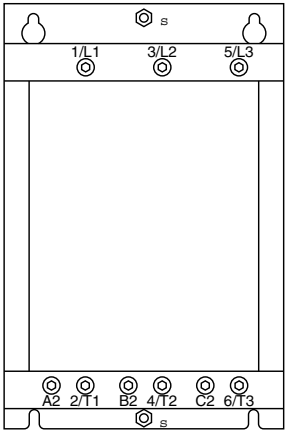

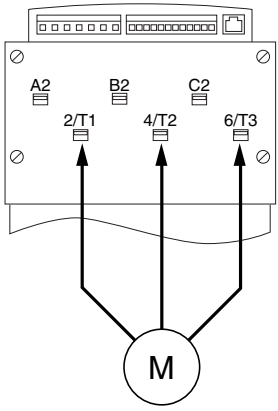

Motore da collegare in 2/T1, 4/T2, 6/T3

Disposizione dei morsetti potenza, ATS 48C14 • e C17 •

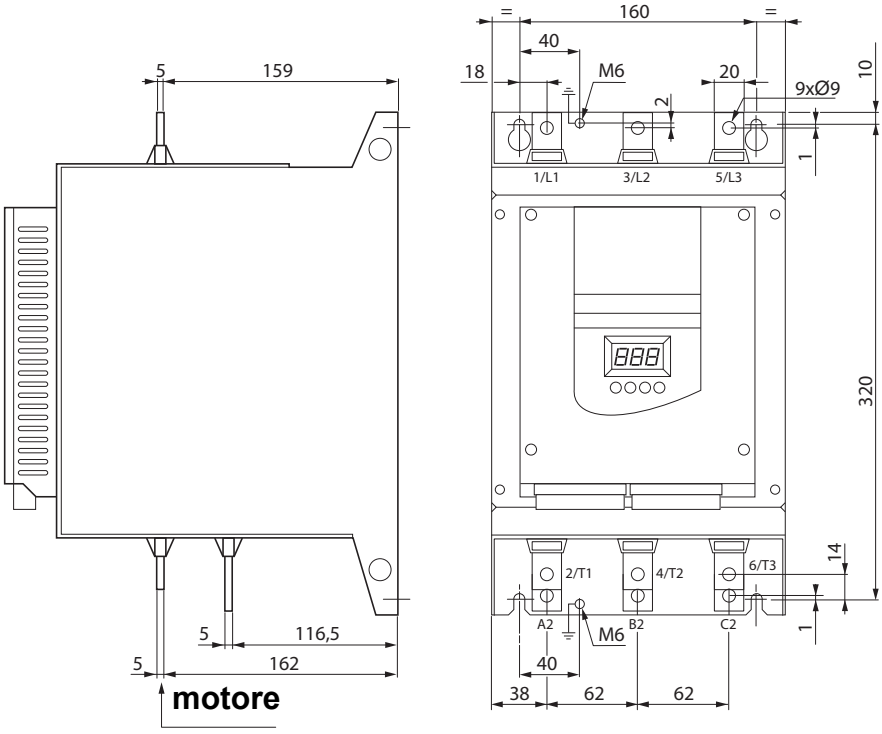

Morsettiere potenza

Disposizione dei morsetti potenza, da ATS 48C21 • a C32 •

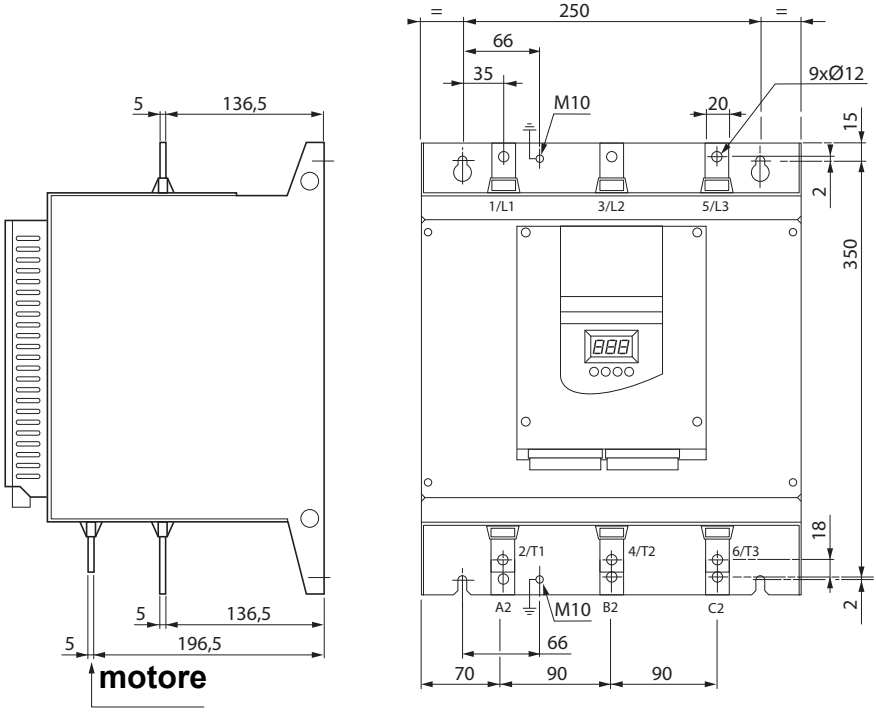

ITALIANO

Disposizione dei morsetti potenza, da ATS 48C41 • a C66 •

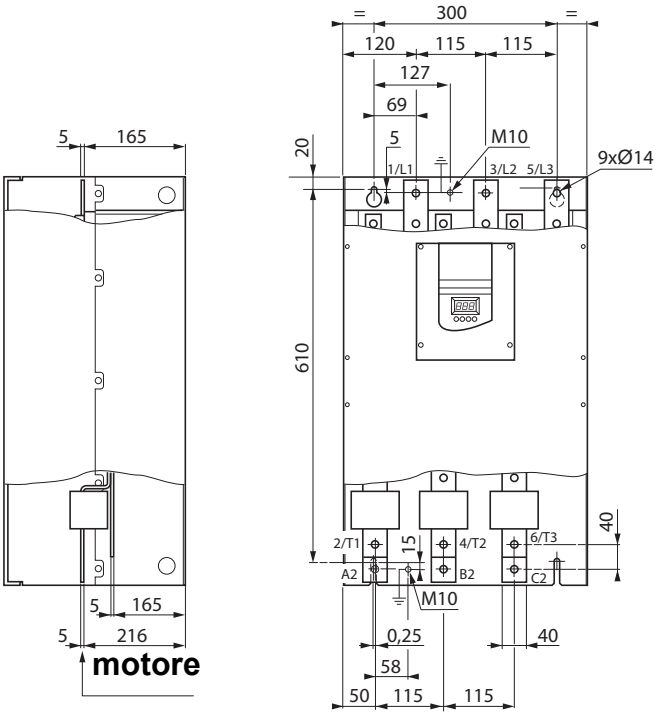

Disposizione dei morsetti potenza, da ATS 48C79 • a M12 •

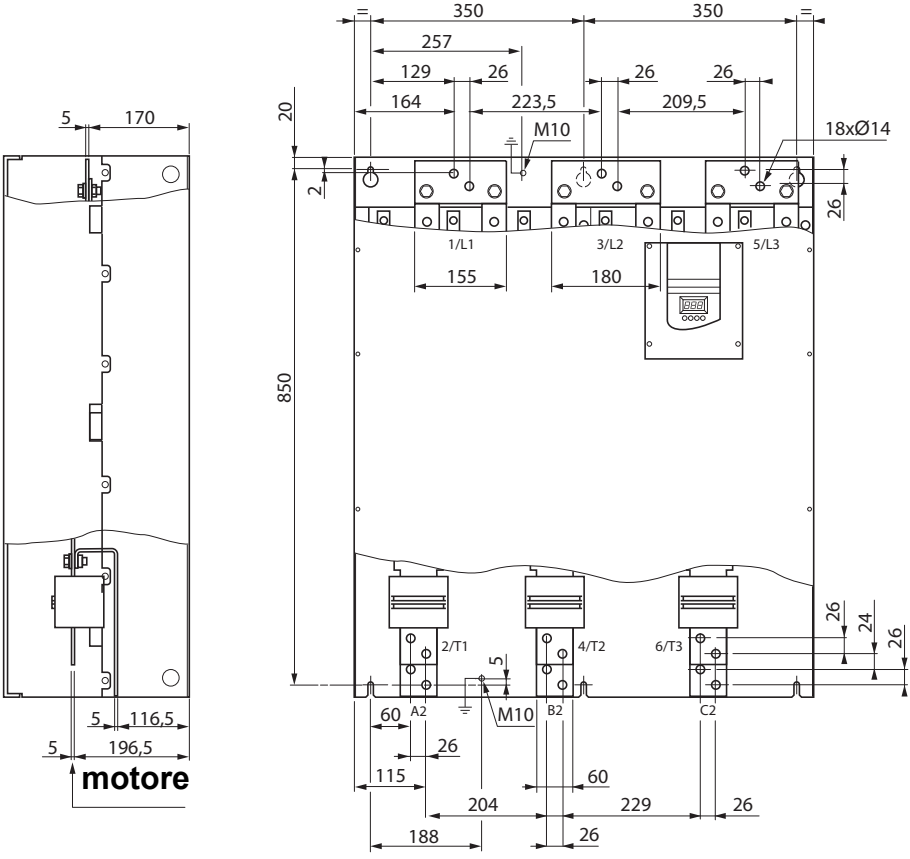

Morsettiere controllo

Le morsettiere controllo sono dotate di connettori estraibili con dispositivo meccanico antierrore

Capacità max di collegamento : 2,5 mm2 (12 AWG)
Coppia di serraggio max : 0,4 N.m (3,5 lb.in)

Per gli avviatori da ATS 48C17 • a M12 •, l'accesso alle morsettiere di controllo è possibile solo dopo la rimozione del coperchio di protezione

Caratteristiche elettriche

Morsetti	Funzioni	Caratteristiche
CL1 CL2	Alimentazione del controllo del l'Altistart	ATS 48 • • • Q : 220 a 415 V + 10% - 15%, 50 / 60 Hz ATS 48 • • • Y : 110 a 230 V + 10% - 15%, 50 / 60 Hz Assorbimento vedere pagina 351
R1A R1C	Contatto a chiusura (NO) del relè programmabile r1	Potere di commutazione min: • 10 mA per 6 V ⎓ Potere di commutazione max su carico induttivo (cos φ = 0,5 e L/R = 20 ms): • 1,8 A per 230 V ⎓ e 30 V ∿ Tensione max 400 V
R2A R2C	Contatto a chiusura (NO) del relè di fine avviamento r2	
R3A R3C	Contatto in chiusura (NO) del relè programmabile r3	
STOP RUN LI3 LI4	Arresto avviatore (stato 0 = arresto) Marcia avviatore (stato 1 = marcia si STOP a 1) Ingresso programmabile Ingresso programmabile	4 ingressi logici 24 V impedenza 4,3kΩ Umax = 30 V, Imax = 8 mA stato 1 : U > 11 V - I > 5 mA stato 0 : U < 5 V - I < 2 mA
24V	Alimentazione degli ingressi logici	+ 24 V ± 25% isolata e protetta e contro i cortocircuiti e i sovraccarichi; portata massima: 200 mA
LO+	Alimentazione delle uscite logiche	Da collegare ai 24 V o ad un'alimentazione esterna
LO1 LO2	Uscite logiche programmabili	2 uscite collettore aperto, compatibili controllore livello 1, norma IEC 65A-68 • Alimentazione +24 V (min 12 V max 30 V) • Corrente max 200 mA per uscita con alimentazione esterna
AO1	Uscita analogica programmabile	Uscita configurabile a 0 - 20 mA o 4 - 20 mA • precisione ± 5 % del valore max, impedenza di carico max 500 Ω
COM	Comune degli ingressi/uscite	0 V
PTC1 PTC2	Ingresso per sonde PTC	Resistenza totale del circuito sonda 750 Ω a 25 °C (3 sonde da 250 Ω in serie per esempio)
(RJ 45)	Presa per • terminale remotato • Power Suite • Bus di comunicazione	RS 485 Modbus

Disposizione dei morsetti controllo

CL1	CL2	R1A	R1C	R2A	R2C	R3A	R3C

STOP	RUN	LI3	LI4	24V	LO+	LO1	LO2	AO1	COM	PTC1	PTC2

(RJ 45)

Cablaggio / Comandi RUN - STOP

Consigli di cablaggio

Potenza

Rispettare le sezioni dei cavi previsti dalle normative vigenti.

L'avviatore deve essere obbligatoriamente collegato alla terra per poter essere conforme con le specifiche relative alle correnti di fuga. Quando le norme d'installazione richiedono una protezione a monte mediante "dispositivo differenziale" è necessario utilizzare un dispositivo di tipo A-Si (evita gli sganciamenti intempestivi alla messa sotto tensione). Verificare la compatibilità con gli altri dispositivi di protezione. Se l'installazione prevede più avviatori sulla stessa linea collegare la terra di ciascun avviatore separatamente. Se necessario prevedere un'induttanza di linea (consultare il catalogo).

Separare i cavi potenza da quelli di segnale a basso livello sull'impianto (trasduttori, controllori programmabili, dispositivi di misura, video, telefono).

Comando

Separare i circuiti di comando e i cavi di potenza.

Funzioni degli ingressi logici RUN e STOP (vedere schema di applicazione a pagina 360)

Comando 2 fili

La marcia e l'arresto sono comandati dallo stato 1þ(marcia) o 0 (arresto), che viene rilevato nello stesso tempo sugli ingressi RUN e STOP.

Alla messa sotto tensione o in seguito a reset manuale del difetto il motore riavvia se è presente l'ordine RUN .

Comando 3 fili

La marcia e l'arresto sono comandati da 2 ingressi logici diversi.
L'arresto si ottiene all'apertura (stato 0) dell'ingresso STOP.
L'impulso sull'ingresso RUN viene memorizzato fino all'apertura dell'ingresso STOP.

Alla messa sotto tensione, in caso di reset manuale del difetto o in seguito ad un comando di arresto, il motore può essere alimentato solo in seguito ad un'apertura (stato 0) e ad un nuovo impulso (stato 1) dell'ingresso RUN.

ATS 48: 1 senso di marcia con contattore di linea, arresto ruota libera, coordinamento tipo 1

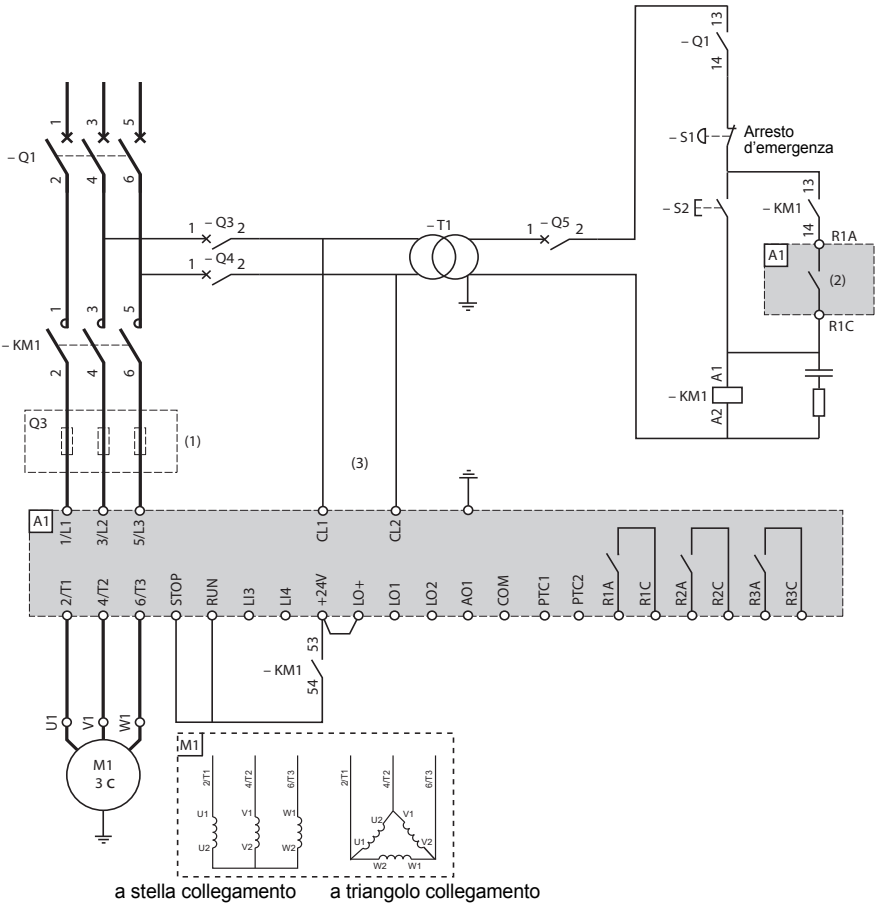

(2)Installazione di fusibili ad intervento ultra rapido in caso di coordinamento tipo 2 (secondo IEC 60 947-4-2).

(3)Configurazione del relè R1: relè d'isolamento (r1I). Vedere "Caratteristiche elettriche", pagina 357. Attenzione ai limiti d'impiego del contatto, utilizzare un relè di appoggio per i contattori di forte calibro.

(4)Inserire un trasformatore quando la tensione della rete è diversa da quella ammessa dal controllo dell'ATS 48. Vedere "Caratteristiche elettriche", pagina 357.

ATS 48: 1 senso di marcia con contattore di linea, by-pass, arresto ruota libera o controllato, coordinamento tipo 1

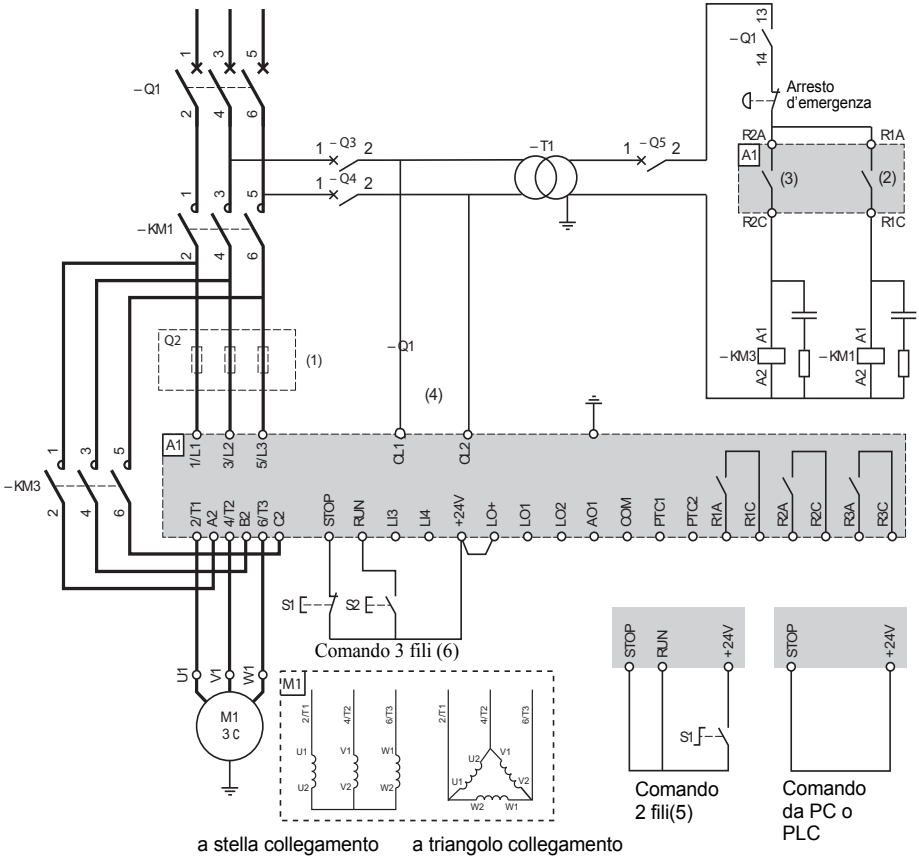

(1) Installazione di fusibili ad intervento ultra rapido in caso di coordinamento tipo 2 (secondo IEC 60 947-4-2).
(2) Configurazione del relè R1: relè d'isolamento (r1I). Attenzione ai limiti d'impiego del contatto, utilizzare un relè di appoggio per i contattori di forte calibro. Vedere "Caratteristiche elettriche", pagina 357.
(3) Attenzione ai limiti d'impiego del contatto, utilizzare un relè di appoggio per i contattori di forte calibro. Vedere "Caratteristiche elettriche", pagina 357.
(4) Inserire un trasformatore quando la tensione della rete è diversa da quella ammessa dal controllo dell'ATS 48. Vedere "Caratteristiche elettriche", pagina 357.
(5) Vedere "Comando 2 fili", pagina 358.
(6) Vedere "Comando 3 fili", pagina 358.

ATS 48: 1 senso di marcia, arresto ruota libera , coordinamento tipo 1, con contattore di linea, by-pass, collegamento a triangolo, ATS 48•••Q o ATS 48•••YS 316.

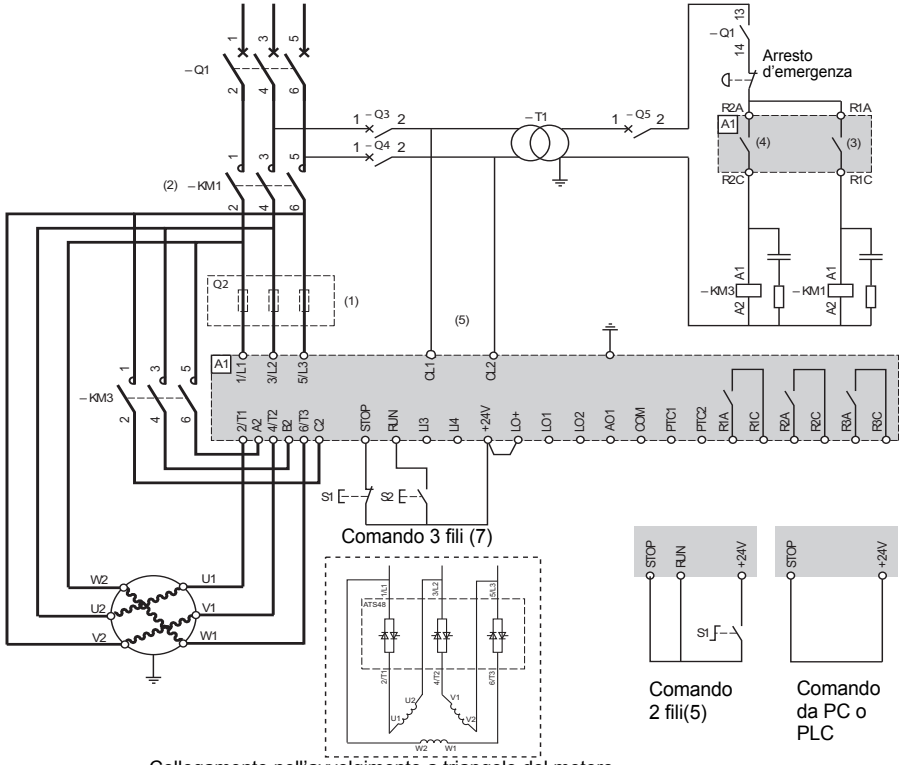

Collegamento nell'avvolgimento a triangolo del motore

Nota: Regolare *dIt* per *on* (vedere **"Menu Regolazioni avanzate drC", pagina 386**)

(1)Installazione di fusibili ad intervento ultra rapido in caso di coordinamento tipo 2 (secondo IEC 60 947-4-2).

(2)Utilizzo di KM1 obbligatorio. Prevedere una protezione termica differenziale esterna type Vigirex pour Compact NS80, bloc Vigi pour Compact NS400 à 630, consulter le ctalogue Merlin Gérin pour les calibres supérieurs.

(3)Configurazione del relè R1: relè d'isolamento (r1I). Attenzione ai limiti d'impiego del Contatto, modificarli per i contattori di forte calibro. Vedere "Caratteristiche elettriche", pagina 357.

(4)Attenzione ai limiti d'impiego del Contatto, utilizzare un relè di appoggio per i contattori di forte calibro. Vedere "Caratteristiche elettriche", pagina 357.

(5)Inserire un trasformatore quando la tensione della rete è diversa da quella ammessa dal controllo dell'ATS 48. Vedere "Caratteristiche elettriche", pagina 357.

(6)Vedere "Comando 2 fili", pagina 358.

(7)Vedere "Comando 3 fili", pagina 358.

(8)Inductances de ligne éventuelles

Quando viene utilizzato il contattore di by-pass il rilevamento del difetto "PHF" può richiedere più tempo

ATS 48: 1 senso di marcia, arresto ruota libera o controllato, contattore di linea, by-pass motore, PV/GV (piccola velocità/grande velocità) con due set di parametri

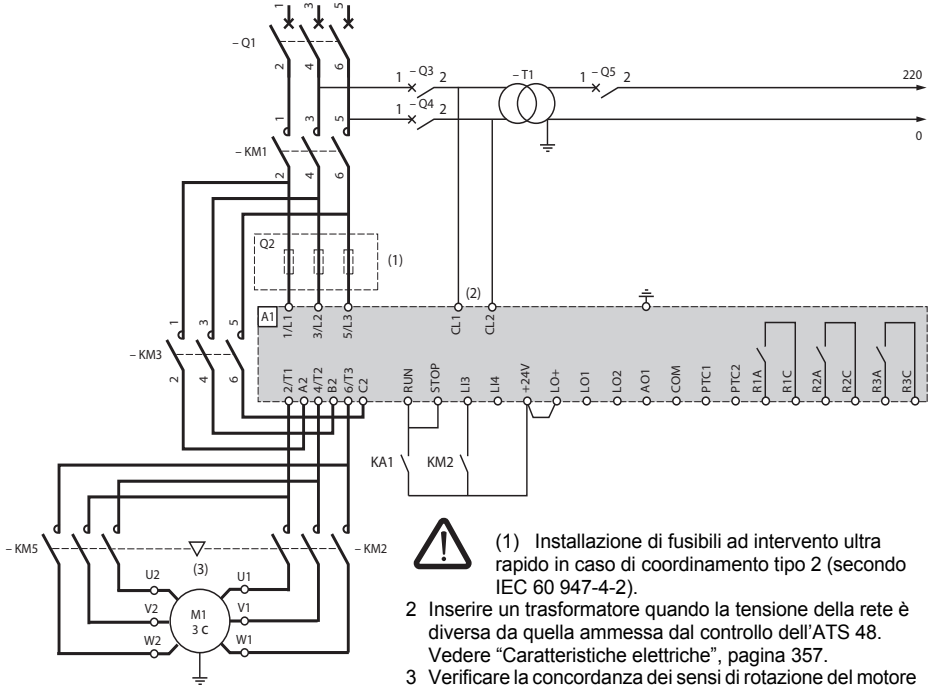

(1) Installazione di fusibili ad intervento ultra rapido in caso di coordinamento tipo 2 (secondo IEC 60 947-4-2).

2 Inserire un trasformatore quando la tensione della rete è diversa da quella ammessa dal controllo dell'ATS 48. Vedere "Caratteristiche elettriche", pagina 357.

3 Verificare la concordanza dei sensi di rotazione del motore per le 2 velocità.

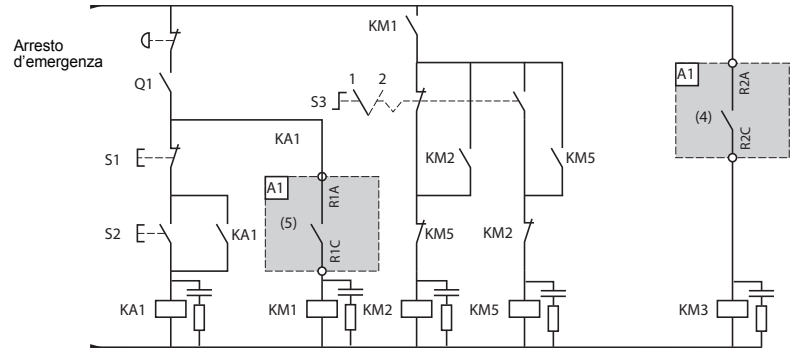

(4) Attenzione ai limiti d'impiego del contatto, utilizzare un relè di appoggio per i contattori di forte calibro. Vedere "Caratteristiche elettriche", pagina 357.

(5) Configurazione del relè R1: relè d'isolamento (r1I). Attenzione ai limiti d'impiego del contatto, utilizzare un relè di appoggio per i contattori di forte calibro. Vedere "Caratteristiche elettriche", pagina 357.
LI3 = LIS (seconda serie di parametri motore)

S3: 1 = PV, 2 = GV

ATS 48: 1 senso di marcia con contattore di linea, avviamento e rallentamento di più motori in cascata con un solo Altistart

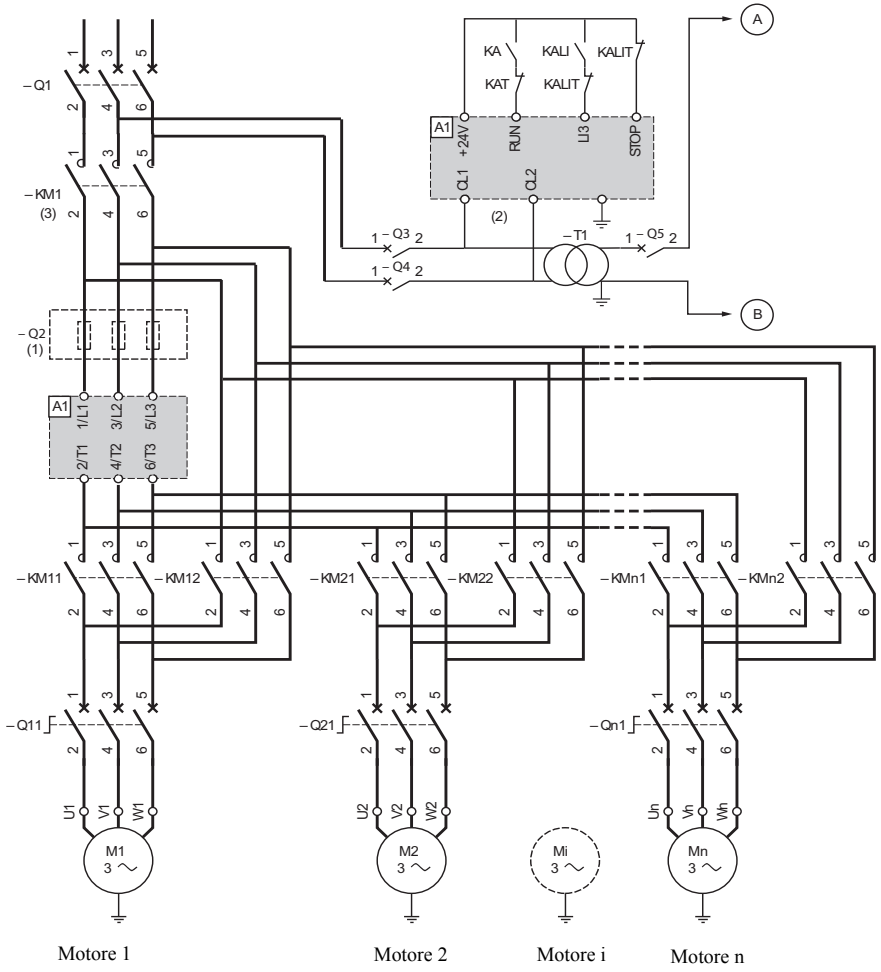

(1) Installazione di fusibili in caso di coordinamento tipo 2 (secondo IEC 60 947-4-2).
(2) Inserire un trasformatore quando la tensione della rete è diversa da quella ammessa dal controllo dell'ATS 48. Vedere "Caratteristiche elettriche", pagina 357.
(3) KM1 è dimensionato in base alla potenza totale dei motori.

Importante :

- È necessario configurare un ingresso logico dell'ATS 48 "in cascata" (LI3 = LIC). Vedere "Attivazione della funzione cascata", pagina 388.
- In caso di difetto non è possibile decelerare o frenare i motori in servizio.
- Regolare la protezione termica di ogni interruttore Qn1 alla corrente nominale motore.

Schema di applicazione

ATS 48: 1 senso di marcia con contattore di linea, avviamento e rallentamento di più motori in cascata con un solo Altistart.

Comando motore 1

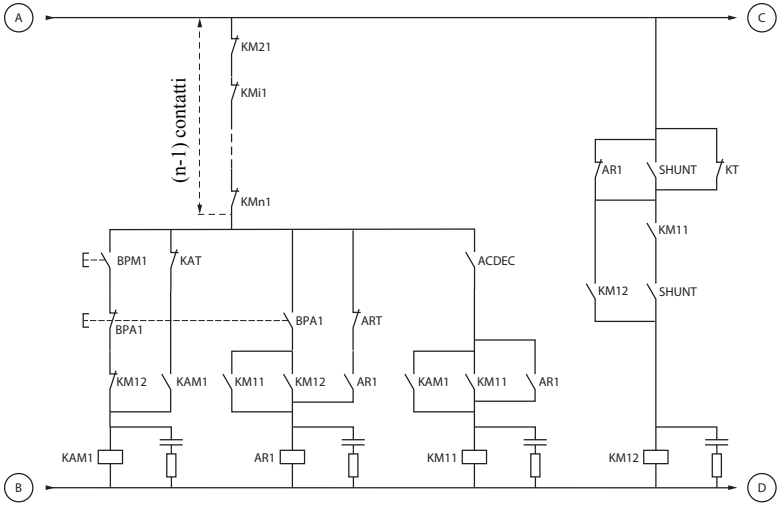

Comando motore 2

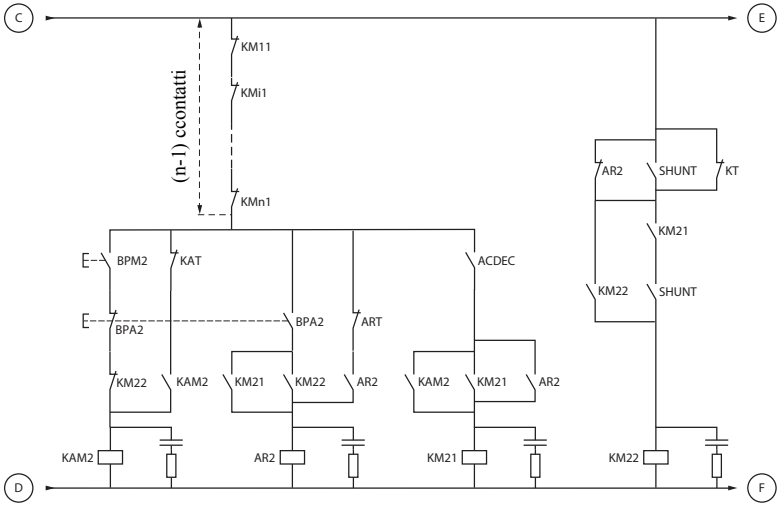

BPM1 : Pulsante "Marcia" motore 1
BPM2 : Pulsante "Marcia" motore 2

BPA1 : Pulsante "Arresto" motore 1
BPA2 : Pulsante "Arresto" motore 2

Schema di applicazione

ATS 48: 1 senso di marcia con contattore di linea, avviamento e rallentamento di più motori in cascata con un solo Altistart.

Comando motore n

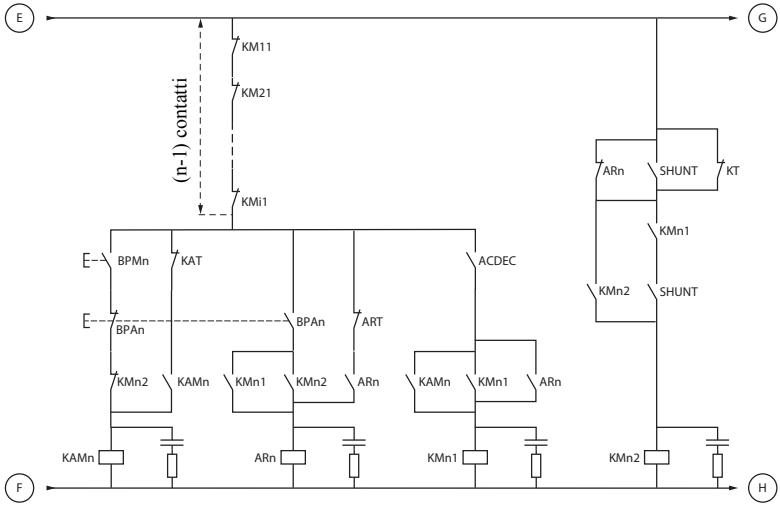

Comando cascata

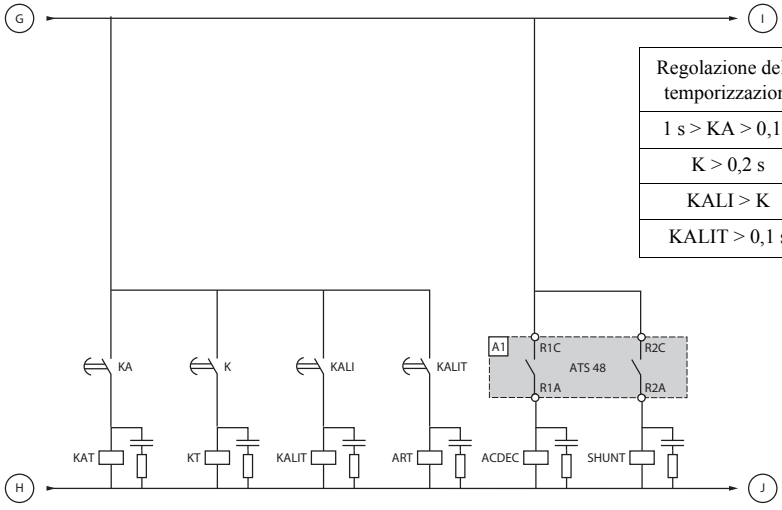

Regolazione delle temporizzazioni
1 s > KA > 0,1 s
K > 0,2 s
KALI > K
KALIT > 0,1 s

BPMn : Pulsante "Marcia" motore n
BPAn : Pulsante "Arresto" motore n

R1 eve essere configurato come relè d'isolamento (r1 = r1I)

Tra due ordini di arresto successivi attendere la fine della temporizzazione KALIT

ITALIANO

Schema di applicazione

ATS 48: 1 senso di marcia con contattore di linea, avviamento e rallentamento di più motori in cascata con un solo Altistart.

Comando cascata

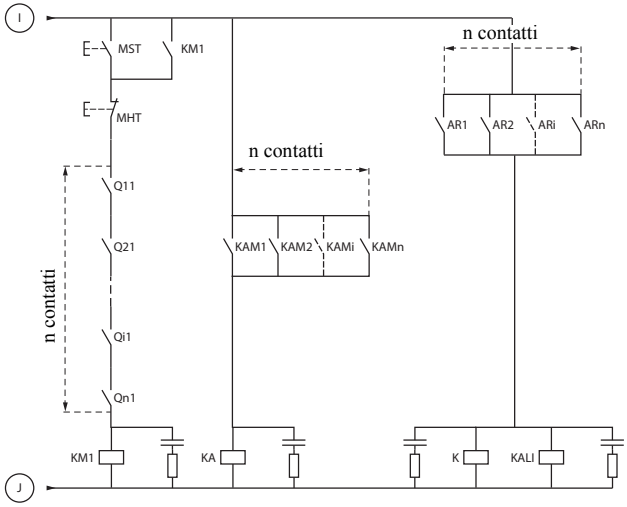

MST : Pulsante "Marcia" generale
MHT : Pulsante "Arresto" generale

Schema di applicazione

ATS 48: 1 senso di marcia con contattore di linea, avviamento e rallentamento di più motori in cascata con un solo Altistart.

Spiegazione della sequenza completa.

Avviare con MST (Pulsante "Marcia" generale) per far salire KM1 (contattore di linea)

1 - 2 - 3

Premere BPM1 per avviare il motore 1. Per avviare il motore 2 premere BPM2, premere BPMn per avviare il motore n.
Quando viene azionato BPM1, KAM1 chiude così come KM11 perchè ACDEC è chiuso (l'ATS48 è sotto tensione con MST e KM1).
KA chiude poichè KAM1 è chiuso. Dopo un periodo di tempo regolabile chiude anche KAT.

4 - 5

L'ATS48 avvia il motore dal momento che è stato dato un ordine di marcia su RUN con KA e KAT.
KAM1 richiude tramite KAT.
KM11 resta chiuso.

6 - 7

A fine avviamento, R2 dell'ATS48 chiude, SHUNT è chiuso, KM12 è chiuso da SHUNT e KM11 resta chiuso.

8 - 9

Dopo un breve istante R2 richiude così come R1 (funzione by-pass avviatore).
KM11 si apre perchè ACDEC è aperto.
Il motore reste alimentato da KM12.
L'ATS48 visualizza un codice di stato.

Per avviare un altro motore, verrà rispettate la stessa logica. Per avviare il motore n, utilizzare BPMn e per arrestare il motore n utilizzare BPAn. È possibile avviare e arrestare qualsiasi motore in qualunque ordine.

Per arrestare il motore 1 premere BPA1. AR1 si chiude

a - b - c - d

K e KALI sono chiusi.
LI dell'ATS48 riceve un ordine da KALI e KALIT (LI deve essere regolato al valore LIC).
R1 e R2 dell'ATS48 chiudono (un impulso su R2 e R1 resta chiuso fino all'arresto completo del motore).

e

KM11 si chiude.
Dopo un periodo di tempo regolabile KT e KALIT chiudono.

f

L'ATS48 riceve un ordine di arresto da KALIT.

g

KM12 ricade.
L'ATS48 decelera il motore.

h

R1 dell'ATS48 si apre quando il motore è completamente fermo.

i

KM11 si apre.
L'ATS48 è pronto ad avviare o ad arrestare un altro motore.

ATS 48: 1 senso di marcia con contattore di linea, avviamento e rallentamento di più motori in cascata con un solo Altistart. Cronogramma

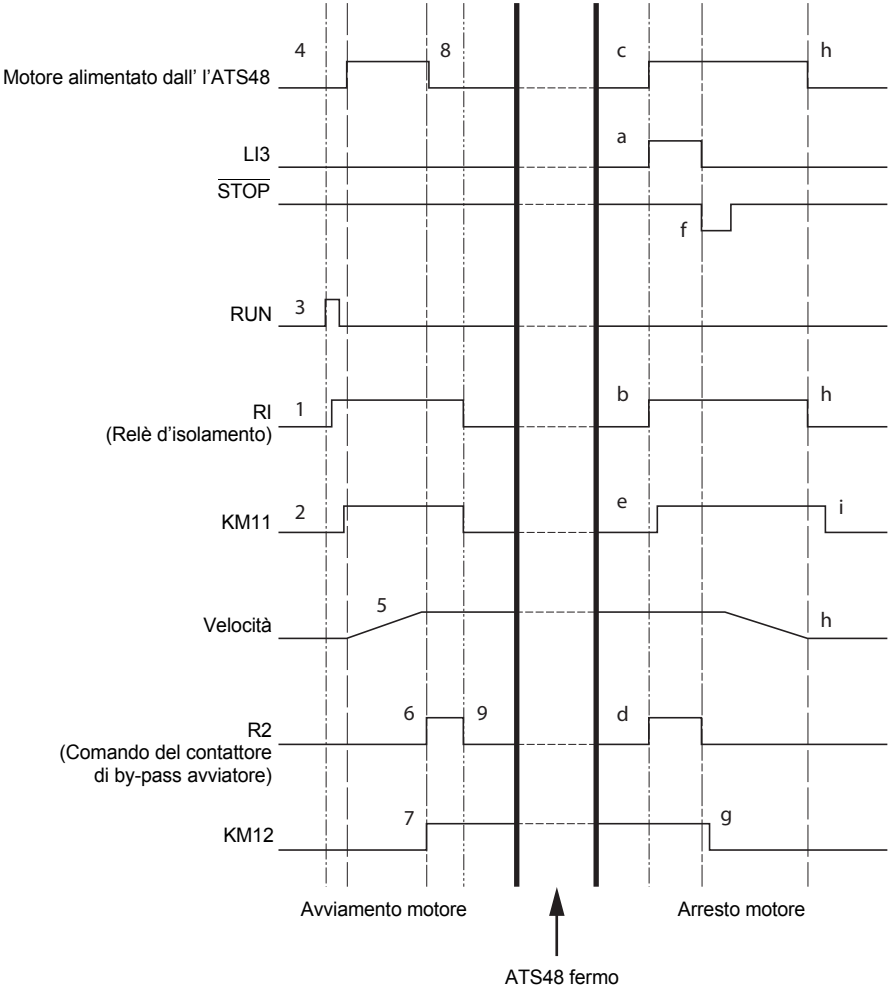

Protezioni termiche

Protezione termica dell’avviatore

Protezione termica mediante sonda PTC fissata sul radiatore e mediante calcolo del riscaldamento dei tiristori.

Protezione termica del motore

L’avviatore calcola costantemente il riscaldamento del motore a partire dalla corrente nominale In regolata e dalla corrente realmente assorbita.

I riscaldamenti possono essere provocati da un debole o forte sovraccarico, di lunga o breve durata.
Le curve di intervento riportate nelle pagine che seguono sono stabilite in funzione del rapporto tra la corrente di avviamento Id e la corrente motore (regolabile) In.

La norma IEC60947-4-2 definisce le classi di protezione che indicano le capacità di avviamento del motore a caldo e a freddo senza difetto termico. Le diverse classi di protezione sono date per uno stato FREDDO (corrispondente ad uno stato termico motore stabilizzato, fuori tensione) e per uno stato CALDO (corrispondente ad uno stato termico motore stabilizzato, a potenza nominale).

L’avviatore è preregolato di base in classe di protezione 10.
È possibile modificare la classe di protezione preimpostata dal menu PrO.

La protezione termica visualizzata dall’avviatore corrisponde alla costante di tempo .
- un allarme sovraccarico segnala se il motore supera la soglia di riscaldamento nominale regolata (stato termico motore = 110 %).
- un difetto termico che blocca il motore in caso di superamento della soglia critica di riscaldamento (stato termico motore = 125 %).

In caso di un avviamento prolungato l’avviatore può passare in difetto o segnalare un allarme termico anche se il valore visualizzato è inferiore alla soglia di intervento.

Il difetto termico può essere segnalato dal relè R1, se la protezione termica non è stata disattivata.

In seguito ad un arresto del motore o alla messa fuori tensione dell’avviatore, il calcolo dello stato termico prosegue anche se la parte controllo non è alimentata. Il controllo termico dell'Altistart impedisce il riavviamento del motore se il suo riscaldamento è ancora troppo elevato.

In caso di impiego di un motore speciale (antideflagrante, a immersione, ecc...), prevedere una protezione termica con sonde PTC.

Protezione termica motore

Curve a freddo

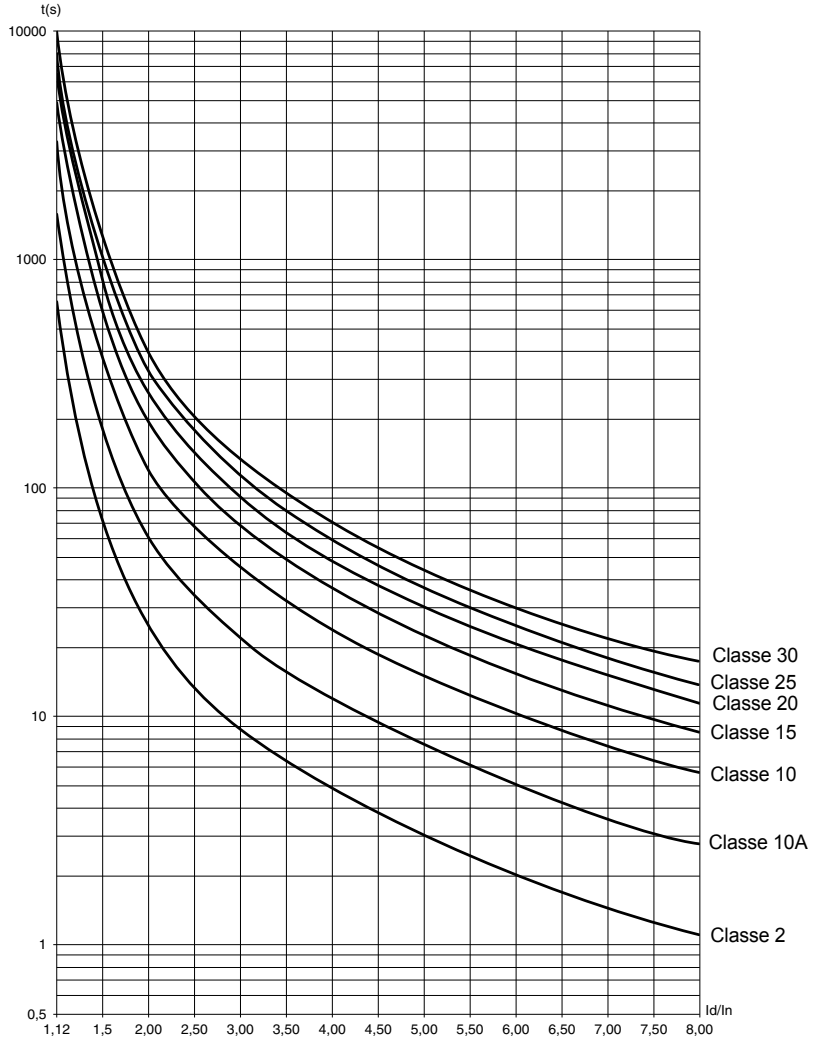

Tempo di intervento per applicazione standard (Classe 10)		Tempo di intervento per applicazione severa (Classe 20)	
3 In	5 In	3,5 In	5 In
46 s	15 s	63 s	29 s

Protezione termica motore

Curve a caldo

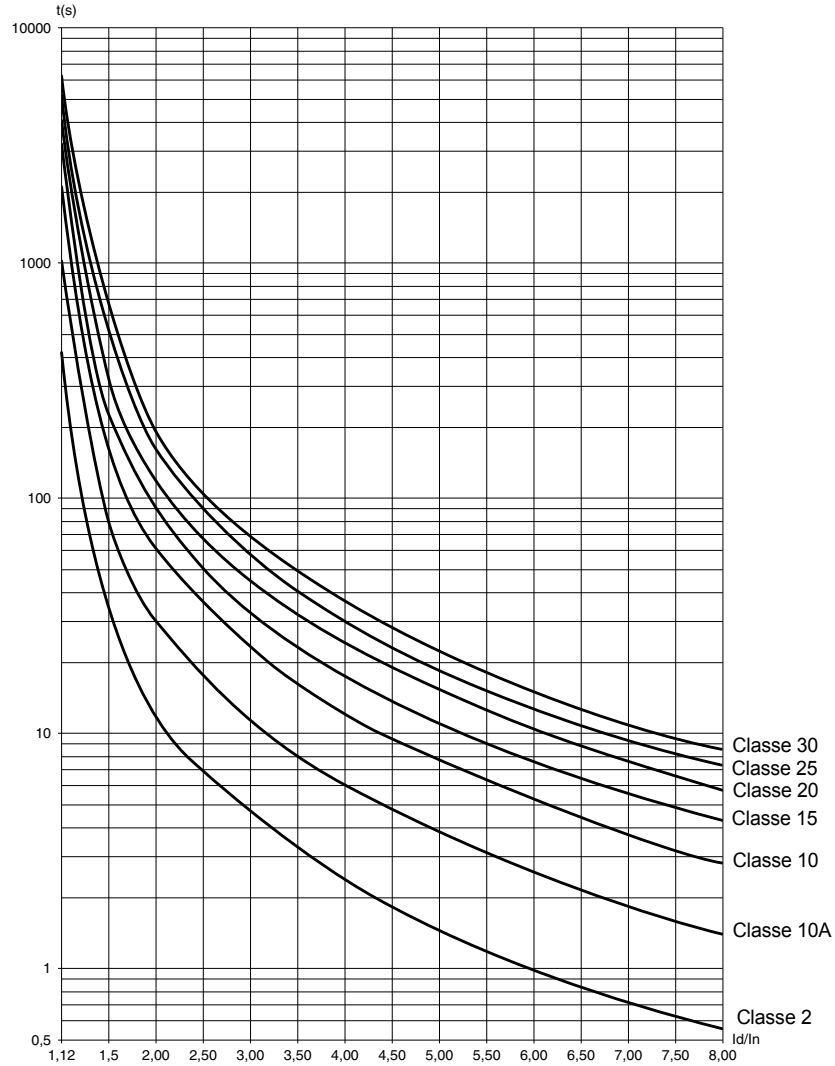

Tempo di intervento per applicazione standard (Classe 10)		Tempo di intervento per applicazione severa (Classe 20)	
3 In	5 In	3,5 In	5 In
23 s	7,5 s	32 s	15 s

Protezione termica motore con sonde PTC

È possibile collegare alla morsettiera della scheda controllo delle sonde PTC integrate al motore che ne misurano la temperatura. Questa informazione analogica è gestita dall'avviatore.

L'elaborazione dell'informazione " superamento termico sonde PTC " può essere utilizzata in due modi:

- arresto in seguito a guasto quando il segnale è attivo
- allarme quando il segnale è attivo. Questo allarme può essere visualizzato in una parola di stato dell'avviatore (collegamento seriale) o su un'uscita logica configurabile.

Nota:
La protezione mediante sonde PTC non disattiva la protezione termica motore effettuata mediante calcolo; le due protezioni possono coesistere.

Display e programmazione

Funzioni dei tasti e del display

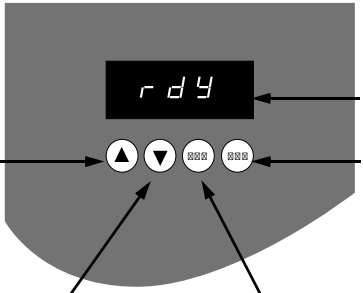

- 3 display "7 segmenti"
- Consente di passare al menu o al parametro precedente o di aumentare il valore visualizzato
- Consente di entrare in un menu o in un parametro o di memorizzare
- il parametro o il valore visualizzato
- Consente di passare al menu o al parametro successivo, o di diminuire il valore visualizzato
- Consente di uscire da un menu o da un parametro o di abbandonare il valore visualizzato per tornare al valore precedente

Premendo i tasti (▲) o (▼) la scelta non viene memorizzata.

Memorizzazione, registrazione della scelta visualizzata: (ENT)

La memorizzazione è segnalata dal lampeggiamento del valore visualizzato.

Regole di visualizzazione

Il principio di visualizzazione dei numeri differisce a seconda della scala max del parametro e e del suo valore.

- Scala max 9990:
  - valori da 0,1 a 99,9 (esempi: 05.5 = 5,5 ; 55.0 = 55 ; 55.5 = 55,5)
  - valori da 100 a 999 (esempio: 555 = 555)
  - valori da 1000 a 9990 (esempio: 5.55 = 5550)
- Scala max 99900:
  - valori da 1 a 999 (esempi: 005 = 5 ; 055 = 55 ; 550 = 550)
  - valori da 1000 a 9990 (esempio: 5.55 = 5550)
  - valori da 10000 a 99900 (esempio: 55.5 = 55500)

Accesso ai menu

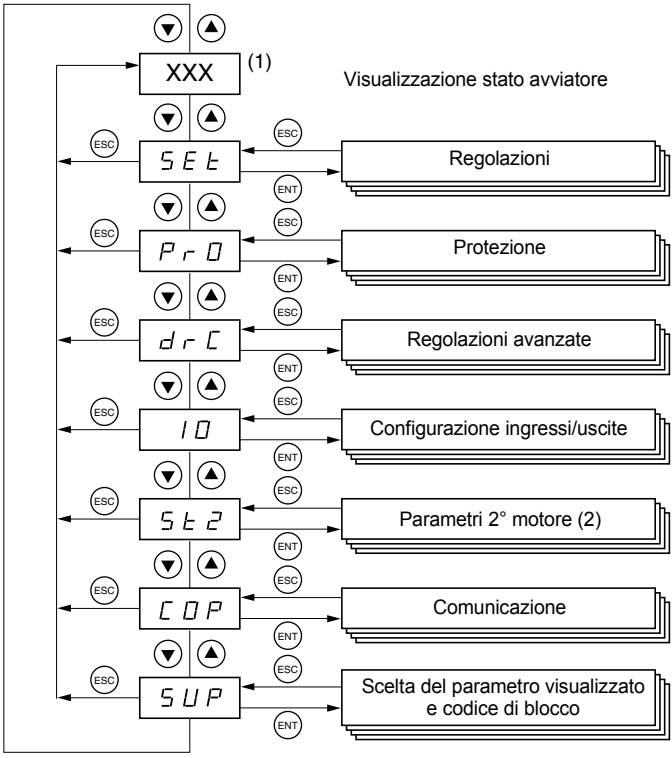

(1) La gestione del valore "XXX" visualizzato è indicata nella tabella qui di seguito riportata.
(2) Il menu St2 è visibile solo se è configurata la funzione "seconda serie di parametri motore".

Accesso ai parametri

Memorizzazione, registrazione della scelta visualizzata: (ENT)

La memorizzazione è segnalata dal lampeggiamento del valore visualizzato

Esempio:

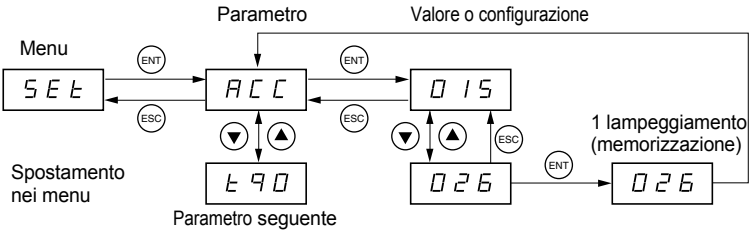

Visualizzazione dello stato dell’avviatore

Il valore "XXX" visualizzato segue le regole qui di seguito riportate:

Valore visualizzato	Condizione
Codice del difetto	Avviatore in difetto
nLP rdY	Avviatore senza ordine di marcia e: • Potenza non alimentata • Potenza alimentata
tbS	Temporizzazione di avviamento non trascorsa
HEA	Riscaldamento motore in corso
Parametro di controllo scelto dall’utilizzatore (menu SUP). In regolazione di base: corrente motore	Avviatore con ordine di marcia
brL	Avviatore in frenatura
Stb	Attesa di un ordine di comando (RUN o STOP) in modo cascata

Quando l’avviatore è in limitazione di corrente, il valore visualizzato "XXX" lampeggia.

Quando l’avviatore è in difetto visualizza un codice di difetto ma resta tuttavia possibile modificare i parametri.

Opzione terminale remotato

LIl terminale remotato **VW3 G48101** può essere montato sulla porta della cassetta o dell'armadio; è fornito con una guarnizione che permette un montaggio con grado di tenuta IP65. È dotato di un cavo di 3 m di lunghezza con prese integrate; la comunicazione avviene tramite connessione RJ45 / modbus dell'avviatore (**vedere le istruzioni fornite con il terminale**). Comprende lo stesso display e gli stessi pulsanti di programmazione dell'Altistart 48 con l'aggiunta di un commutatore di blocco d'accesso ai menu.

Vista lato frontale:

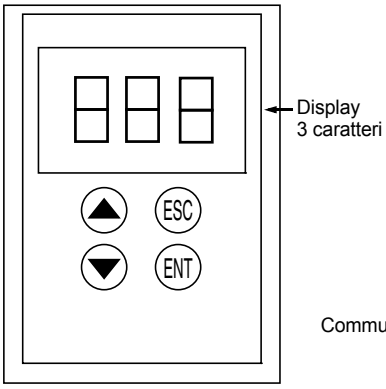

Vista lato posteriore:

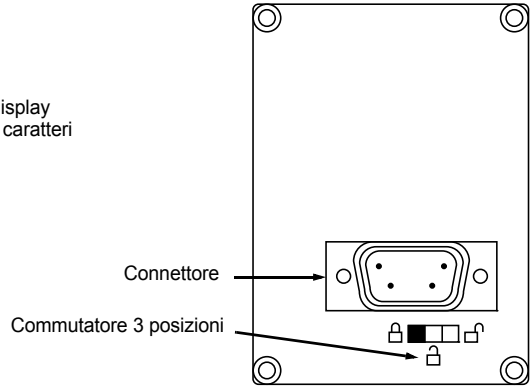

Gestione del commutatore del terminale remotato

Il commutatore 3 posizioni del terminale viene utilizzato nel modo seguente:

- posizione bloccata : sono accessibili solo i parametri di controllo; la modifica della regolazione del parametro visualizzato con l'avviatore in marcia non è possibile.
- posizione semi-bloccata : accesso limitato ai parametri dei menu SEt, PrO e SUP.
- posizione sbloccata : sono accessibili tutti i parametri.

Le eventuali limitazioni di visualizzazione dovute al commutatore del terminale remotato restano applicabili anche in seguito allo scollegamento o alla messa fuori tensione dell'avviatore .

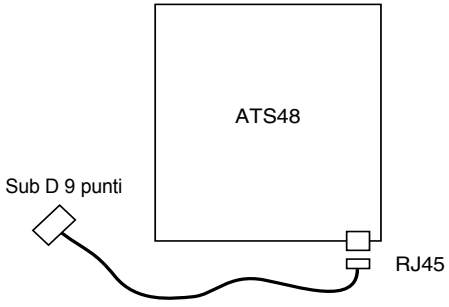

ITALIANO

Menu Regolazioni SEt

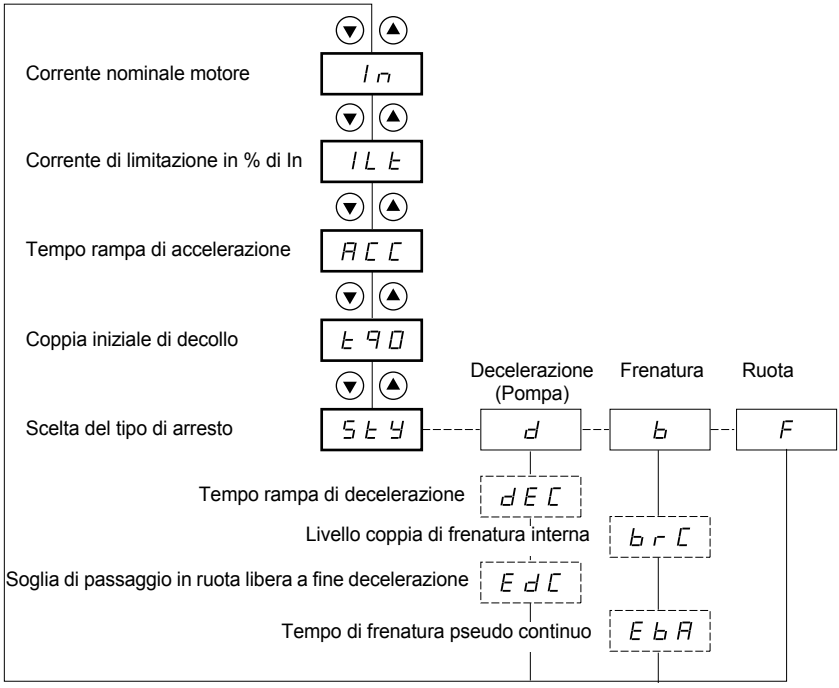

Parametri del menu

Selezione possibile

Parametro visualizzato in base alla selezione

Per l'accesso ai parametri, vedere pagina 374.

La modifica dei parametri di regolazione è possibile solo a motore fermo.

Codice	Descrizione	Campo di regolazione	Preregolazione di base
In	**Corrente nominale motore**	0,4 a 1,3 ICL	(1)
	Impostare il valore della corrente nominale motore indicata sulla targa motore, anche in caso di collegamento dell'avviatore nell'avvolgimento triangolo del motore (dLt nel menu PrO). Verificare che la corrente sia compresa tra 0,4 e 1,3 ICL (ICL: Calibro dell'avviatore).		
ILt	**Corrente di limitazione**	150 a 700 % di In, limitata al 500 % de ICL	400 % di In
	La corrente di limitazione ILt è espressa in % di In. Quando il carico è massimo, il valore ILt deve essere sufficientemente elevato per consentire l'avvio del motore. Se l'applicazione richiede più di 500% Icl, l'avviatore deve essere sovradimensionato. È limitata al 500 % di ICL (calibro avviatore, vedere tabelle "Associazione avviatore-motore", pagina 342. Corrente di limitazione = ILt x In. esempio 1: In = 22 A, ILt = 300 %, corrente di limitazione = 300 % x 22 A = 66 A esempio 2: ATS 48C21Q, con ICL = 210 A In = 195 A, ILt = 700 %, corrente di limitazione = 700 % x 195 = 1365, limitata al 500 % x 210 = 1050 A		
ACC	**Tempo rampa di accelerazione**	da 1 a 60 s	15 s
	Tempo di aumento della coppia di avviamento per passare da 0 alla coppia nominale Cn, ovvero la pendenza della rampa di crescita della coppia. 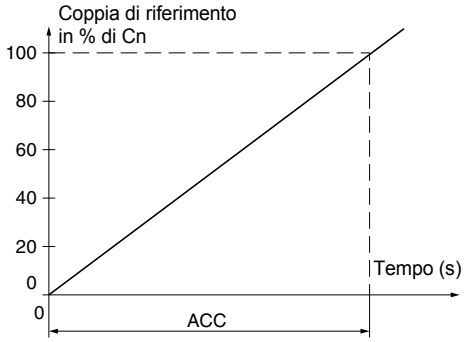 		

(1) Preregolazione di base di In corrispondente al valore tipico di un motore normalizzato 4 poli in tensione 400V in classe 10 (per ATS 48•••Q).
Preregolazione di base di In corrispondente al valore tipico di un motore normalizzato secondo NEC in tensione 460 V, in classe 10 (per ATS 48•••Y).

Codice	Descrizione	Campo di regolazione	Preregolazione di base
tq0	**Coppia iniziale di decollo**	da 0 al 100 % di Cn	20 %
	Regolazione della coppia iniziale nelle fasi di avviamento, variabile da 0 al 100 % della coppia nominale. Impostare la coppia di avviamento iniziale in modo da produrre la rotazione del motore non appena viene applicato l'ordine. Se la coppia è troppo bassa, l'avviamento del motore sarà ritardato rispetto al segnale di marcia. 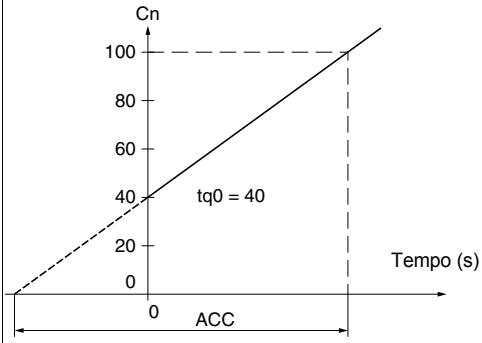		
StY	**Scelta del tipo di arresto**	d-b-F	-F-
	Sono possibili tre tipi di arresto: **- d -** : Arresto decelerato mediante controllo della coppia. L'avviatore applica una coppia motore per decelerare progressivamente sulla rampa, evitando un arresto brusco. Questo tipo di arresto permette di ridurre efficacemente i colpi di ariete su una pompa. **- b -** : Arresto in frenatura dinamica, con generazione da parte dell'avviatore di una coppia di frenatura nel motore per assicurare il rallentamento in caso d'inerzia importante. **- F -** : Arresto a ruota libera, senza applicazione di coppia al motore da parte dell'avviatore. Nota : Se l'avviatore è collegato sull'avvolgimento a triangolo del motore è consentito solo l'arresto tipo -F- e tipo -d-.		

Nota: Se l'avviamento è accoppiato nel triangolo di liquidazione del motore solo smettere di tipo b non è consentito.

Codice	Descrizione	Campo di regolazione	Preregolazione di base
dEC	**Tempo rampa di decelerazione**	da 1 a 60 s	15 s
	Parametro accessibile solo se StY = -d-. Permette di regolare un tempo compreso tra 1 e 60 s, per passare dalla coppia stimata alla coppia nulla (= pendenza della rampa di riduzione della coppia in caso di arresto -d-). Questo consente di adattare la progressione della decelerazione evitando gli shock idraulici sulle applicazioni pompe tramite modifica del riferimento di coppia. 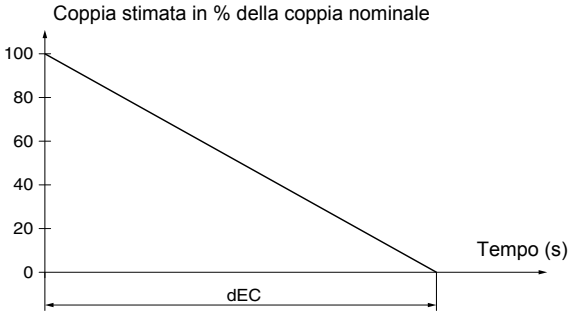 		
EdC	**Soglia di passaggio a ruota libera a fine decelerazione**	da 0 a 100 %	20 %
	Parametro accessibile solo se StY = -d- e se il parametro CLP del menu Controllo (drC) è rimasto alla preregolazione di base (On). Permette di regolare il livello della coppia finale compreso tra 0 e 100 % della coppia stimata all'inizio della decelerazione. Nelle applicazioni del tipo pompe, il controllo della decelerazione non è necessariamente al di sotto di un livello di carico regolato mediante Edc. Se la coppia stimata all'inizio della decelerazione è inferiore a 20, ovvero al 20 % della coppia nominale, la decelerazione controllata non è attivata, con passaggio in ruota libera. 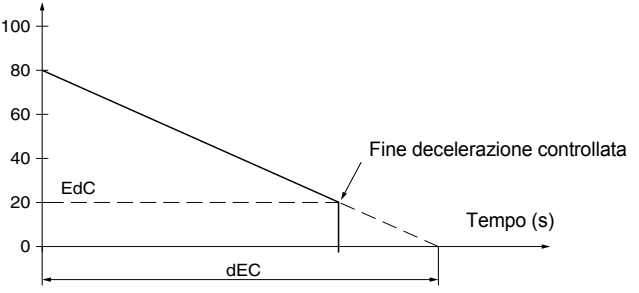 		

Codice	Descrizione	Campo di regolazione	Preregolazione di base
brC	**Livello coppia di frenatura interna**	da 0 a 100 %	50 %
	Parametro accessibile solo se StY = -b-. Per arresto tipo -b-, permette di regolare l'intensità di frenatura La frenatura è attiva fino al 20 % della velocità nominale, l'arresto totale del motore si aggiusta regolando il tempo dell'iniezione di corrente pseudo continua nel motore (su due fasi). Vedere parametro seguente EbA 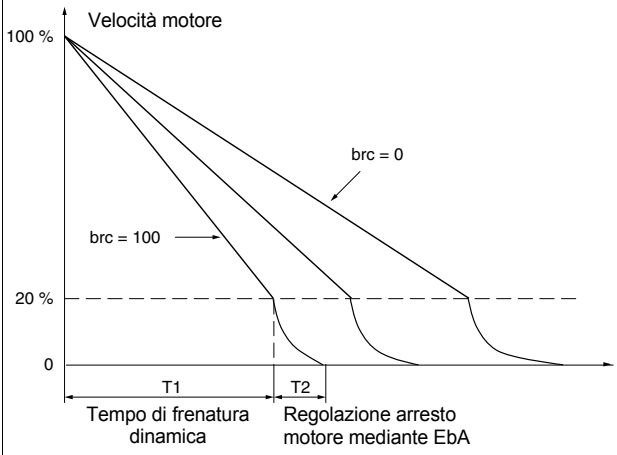 Tempo iniezione pseudo continua: T2 = T1 x EbA Nota: il tempo T1 non è determinato da brC. T1 è il tempo in secondi impiegato dal motore per passare dal 100 % della velocità nominale al 20 % (dipende dalle caratteristiche motore e dal tipo di applicazione).		
EbA	**Tempo di frenatura pseudo continua**	da 20 a 100 %	20 %
	Parametro accessibile solo se StY = -b-. Per arresto tipo -b-, regolazione del tempo d'iniezione di corrente a fine frenatura. Permette di regolare il tempo d'iniezione di corrente. Regolabile dal 20 al 100 % del tempo di frenatura dinamica (T1). Esempio: Frenatura dinamica = 10 s (T1) Il tempo di arresto può variare da 2 a 10 s (T2) EbA = 20 Corrisponde ad un tempo d'iniezione di 2 s EbA = 100 Corrisponde ad un tempo d'iniezione di 10 s Regolazione di base: 20		

Menu Protezione PrO

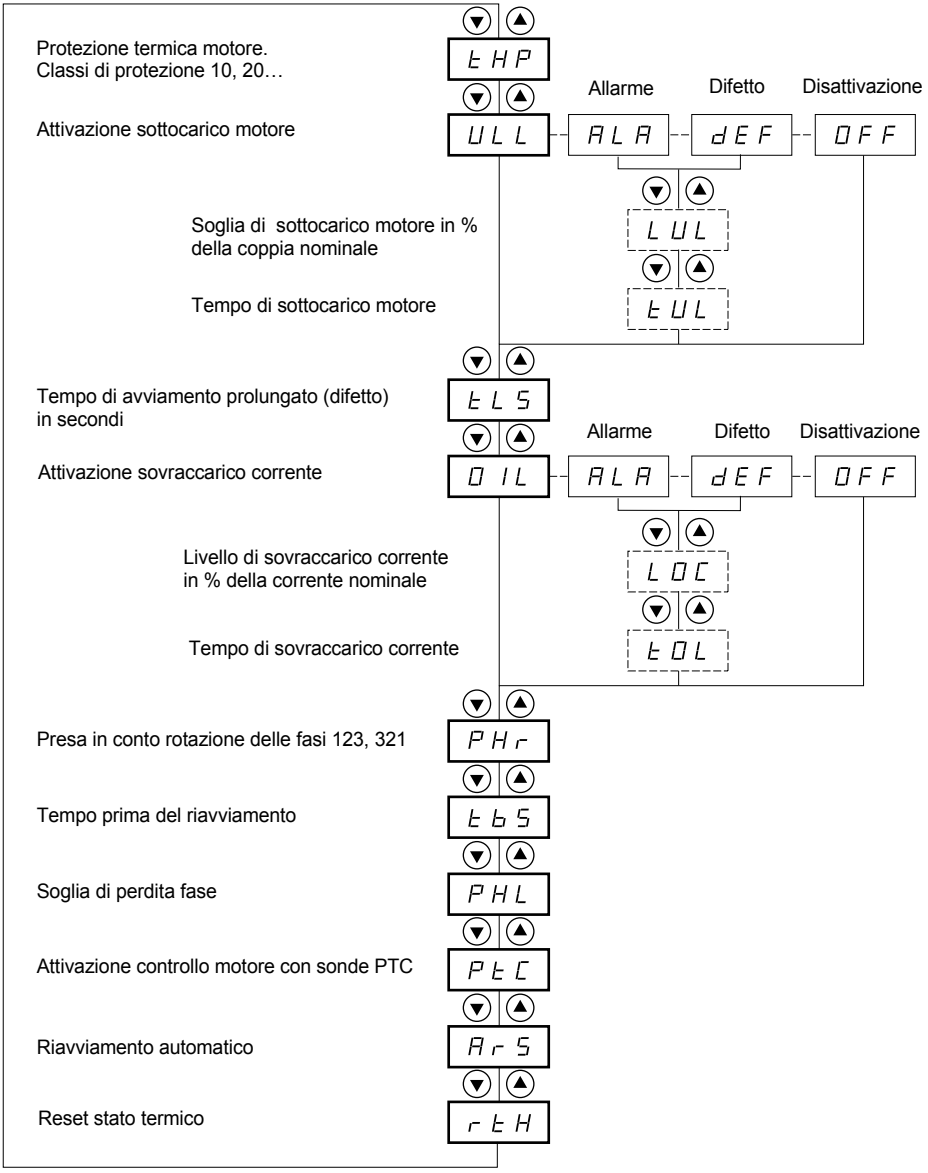

Parametri del menu

Selezione possibile

Parametro visualizzato in base alla selezione

Per l'accesso ai parametri, vedere pagina 374.

La modifica dei parametri di protezione è possibile solo a motore fermo.

Codice	Descrizione	Campo di regolazione	Preregolazione di base
tHP	**Protezione termica motore**		10
	Vedere “Protezioni termiche”, pagina 369. 30: classe 30 25: classe 25 20: classe 20 (applicazione severa) 15: classe15 10: classe 10 (applicazione standard) 10A: classe 10A 2: sottoclasse 2 OFF: nessuna protezione		
ULL	**Attivazione sottocarico motore**		OFF
	In caso di coppia motore inferiore ad una soglia regolabile LUL per un tempo superiore ad un valore regolabile tUL: - ALA: attivazione di un allarme (bit interno e uscita logica configurabile) - dEF: blocco dell’avviatore e visualizzazione del difetto ULF - OFF: nessuna protezione 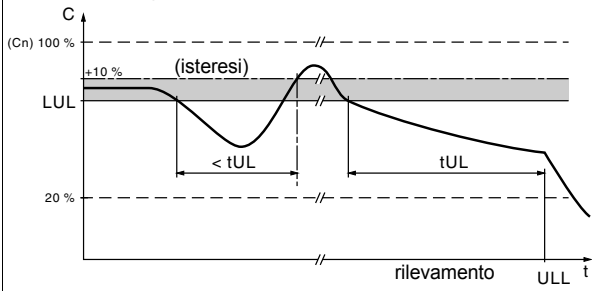		
LUL	**Soglia sottocarico motore**	da 20% a 100% di Cn	60 %
	Parametro non disponibile se ULL = OFF. LUL è regolabile dal 20% al 100% della coppia nominale motore.		
tUL	**Tempo sottocarico motore**	da 1 a 60 s	60 s
	Parametro non disponibile se ULL = OFF. La temporizzazione tUL viene attivata quando la coppia motore scende al di sotto della soglia LUL e viene resettata se la coppia supera nuovamente la soglia LUL di + 10% (isteresi).		
tLS	**Tempo di avviamento prolungato**	da 10 a 999 s o OFF	OFF
	Se il tempo di avviamento supera il valore di tLS, l’avviatore si blocca e visualizza il difetto StF. Le condizioni che determinano la fine di un avviamento sono: tensione rete applicata al motore (angolo di accensione min) e corrente motore inferiore a 1,3 In. - OFF: nessuna protezione		

La configurazione di un controllo in allarme (ALA) previene la presenza di un difetto ma non garantisce alcuna protezione diretta dell’installazione

Codice	Descrizione	Campo di regolazione	Preregolazione di base
OIL	**Attivazione sovraccarico corrente**		OFF
	Funzione attiva solamente in regime stabilito. Se la corrente motore supera una soglia regolabile LOC per un tempo superiore ad un valore regolabile tOL: - ALA: attivazione di un allarme (bit interno e uscita logica configurabile) - dEF: blocco dell'avviatore e visualizzazione del difetto OLC - OFF: nessuna protezione 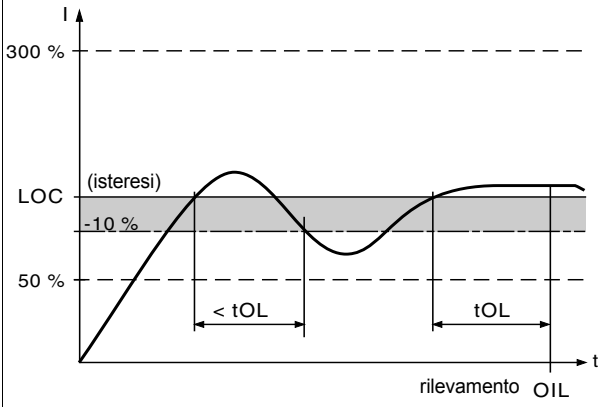		
LOC	**Soglia di sovraccarico corrente**	da 50% a 300% di In	80 %
	Parametro non disponibile se OIL = OFF. LOC è regolabile da 50% a 300% della corrente nominale motore.		
tOL	**Tempo di sovraccarico corrente**	da 0,1 a 60 s	10 s
	Parametro non disponibile se OIL = OFF. La temporizzazione tOL è attivata quando la corrente motore supera la soglia LOC, e viene resettata se la corrente scende nuovamente al di sotto della soglia LOC almeno del 10% (isteresi).		

ITALIANO

La configurazione di base del controllo in allarme (ALA) previene la presenza di un difetto ma non garantisce alcuna protezione diretta dell'installazione

Menu Protezione PrO

Codice	Descrizione	Campo di regolazione	Preregolazione di base
PHr	**Protezione contro l'inversione delle fasi della rete**	321 o 123 o no	no
	Se le fasi della rete non seguono l'ordine configurato, l'avviatore si blocca e visualizza il difetto PIF. - 321: senso inverso (L3 - L2 - L1) - 123: senso diretto (L1 - L2 - L3) - no: nessun controllo		
tbS	**Tempo prima del riavviamento**	da 0 a 999 s	2 s
	Evita avviamenti consecutivi troppo ravvicinati che potrebbero surriscaldare il motore. La temporizzazione è attivata a partire dal passaggio a ruota libera. In comando 2 fili il riavviamento si effettua al termine della temporizzazione se l'ingresso di comando RUN è ancora azionato. In comando 3 fili il riavviamento si effettua al termine della temporizzazione se viene dato un nuovo ordine di comando RUN (fronte di salita). L'avviatore visualizza "tbS" per la temporizzazione.		
PHL	**Soglia di perdita fase**	da 5 a 10 %	10 %
	Se la corrente motore scende al di sotto della soglia regolata in una fase per 0,5 s o nelle tre fasi per 0,2 s, l'avviatore si blocca e visualizza il difetto PHF. Regolabile tra 5 e 10 % del calibro dell'avviatore ICL.		
PtC	**Attivazione controllo motore con sonde PTC**		OFF
	Le sonde PTC integrate al motore devono essere collegate all'ingresso analogico adatto. Questa protezione è indipendente dalla protezione termica calcolata (parametro tHP); le due protezioni possono essre utilizzate contemporaneamente. - ALA: attivazione di un allarme (bit interno e uscita logica configurabile) - dEF: blocco dell'avviatore e visualizzazione del difetto OtF - OFF: nessuna protezione		
ArS	**Riavviamento automatico**	On - OFF	OFF
	Aè possibile in seguito ad un blocco su difetto, se questo è stato eliminato e se le altre condizioni di funzionamento lo consentono. Il riavviamento avviene con una serie di tentativi automatici ad intervalli di 60 s uno dall'altro. Se dopo 6 tentativi non si verifica l'avviamento, la procedura viene abbandonata e l'avviatore resta bloccato fino alla messa fuori tensione e alla successiva messa in tensione o fino al suo riarmo manuale (vedere capitolo "Difetti - cause - procedure d'intervento" pagina 405). I difetti che autorizzano questa funzione sono: PHF, FrF, CLF, USF. Il relè di sicurezza dell'avviatore resta quindi sganciato se la funzione è attiva. L'ordine di marcia deve restare mantenuto. Questa funzione è utilizzabile solo in comando 2 fili. - OFF: Funzione non attiva - On: Funzione attiva **Accertarsi che il riavviamento intempestivo non rappresenti un pericolo per le persone e per il materiale**		
rtH	**Reset dello stato termico motore calcolato dall'avviatore**	no - YES	no
	- no: Funzione non attiva - YES: Funzione attiva		

La configurazione di base controllo in allarme (ALA) previene la presenza di un difetto ma non garantisce alcuna protezione diretta dell'installazione

Menu Regolazioni avanzate drC

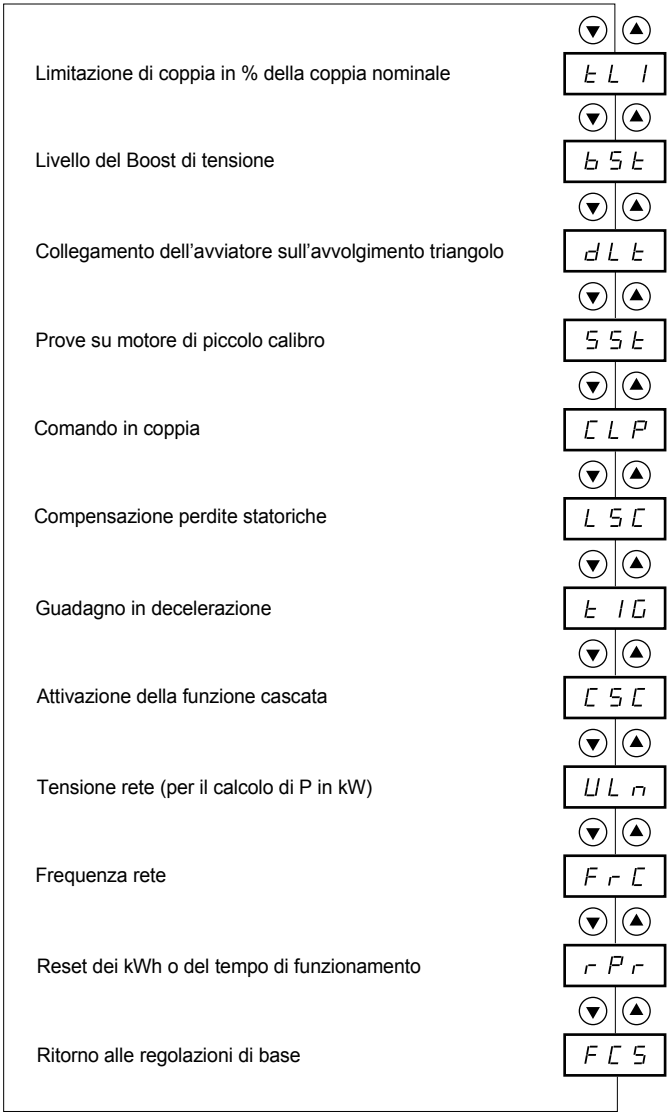

Parametri del menu

Menu Regolazioni avanzate drC

La modifica dei parametri Regolazioni avanzate è possibile solo a motore fermo.

Codice	Descrizione	Campo di regolazione	Preregolazione di base
tLI	**Limitazione di coppia**	da 10 a 200 % o OFF	OFF
	Permette di limitare il riferimento di coppia per evitare passaggi in ipersincrono su applicazioni a forte inerzia. Permette un avviamento a coppia costante se tqO = tLI. - OFF: nessuna limitazione - da 10 a 200: regolazione della limitazione in % della coppia nominale		
bSt	**Livello del Boost di tensione**	da 50 a 100 % o OFF	OFF
	Possibilità di applicare alla comparsa di un ordine di marcia per 100 ms una tensione regolabile. Al termine di questo intervallo di tempo l'avviatore riprende una rampa di accelerazione standard a partire dal valore di coppia iniziale regolato (tq0). Questa funzione permette di vincere un'eventuale coppia "di decollo" (fenomeno di aderenza all'arresto o di duro meccanico). - OFF: Funzione non attiva - da 50 a 100: regolazione in % della tensione nominale motore 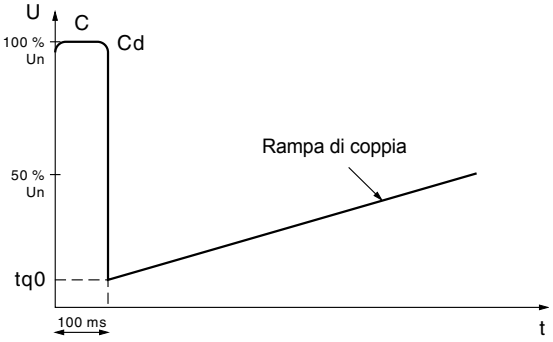 **In caso di sovradimensionamento dell'avviatore (In motore > In ATS48), un valore troppo elevato del parametro bSt può provocare il blocco dell'avviatore in OCF**		
dLt	**Collegamento dell'avviatore nell'avvolgimento triangolo**	on - OFF	OFF
	Questo tipo di montaggio permette un surclassamento di 1,7 in potenza dell'avviatore, ma non permette né frenatura dinamica. - OFF: collegamento normale in linea - On: collegamento nell'avvolgimento a triangolo del motore La corrente nominale motore In resta quella indicata sulla targa motore, mentre il valore di corrente visualizzato corrisponde alla corrente di linea della rete di alimentazione. Il valore della corrente nominale In (menu SEt) resta il valore motore per il collegamento a triangolo, dal momento che l'avviatore effettua la conversione per controllare la corrente presente negli avvolgimenti. Parametro accessibile solo agli avviatori ATS 48•••Q o ATS 48•••YS 316. **• Con Questa funzione, non è possibilie frenatura dinamica** **• Nessuna funzione cascata** **• Nessun preriscaldamento** **• Lo schema di collegamento di pagina 361 deve essere rispettato.**		

ITALIANO

Codice	Descrizione	Campo di regolazione	Preregolazione di base
SSt	**Prove su motore di piccolo calibro**	On-OFF	OFF
	Prove effettuate per verificare l'avviatore a scopo di test o di manutenzione, su un motore di potenza molto inferiore al calibro dell'avviatore (in particolare per gli avviatori di forte potenza). Il parametro comando in coppia CLP viene disattivato automaticamente. - OFF: funzione non attiva - On: funzione attiva **Nota:** • **SSt torna in OFF all'interruzione della tensione di controllo. Alla successiva rimessa sotto tensione il difetto PHF e il parametro CLP riprendono la loro configurazione iniziale.** • **SST è dedicato unicamente alla manutenzione e alle prove dell'avviatore.**		
CLP	**Comando in coppia** (tipo di comando).	On-OFF	On
	- OFF: funzione non attiva - On: funzione attiva In posizione On l'avviamento e il rallentamento si effettuano in rampa di coppia. In posizione OFF l'avviamento e il rallentamento si effettuano con una variazione della tensione. Per le applicazioni che mettono in gioco più motori in parallelo sullo stesso avviatore o un motore di potenza molto bassa rispetto al calibro dell'avviatore (utilizzo di un motore sottodimensionato per testare l'avviatore), si consiglia il comando in tensione (CLP=OFF).		
LSC	**Compensazione delle perdite statoriche**	da 0 a 90 %	50 %
	Parametro attivo nelle fasi di accelerazione (e di decelerazione se StY = -d-). In caso di oscillazioni di coppia, ridurre progressivamente questo parametro fino ad ottenere un funzionamento corretto. I fenomeni di oscillazione sono riscontrabili principalmente in caso di collegamento dell'avviatore sull'avvolgimento a triangolo del motore e in caso di motori a forte scorrimento.		
tIG	**Guadagno in decelerazione** (per comando in coppia).	da 10 a 50 %	40 %
	Parametro accessibile solo se CLP = On e se il parametro StY (menu regolazioni SEt) = -d-. Permette di eliminare le instabilità in decelerazione. Regolare in più o in meno in funzione delle oscillazioni.		
CSC	**Attivazione della funzione cascata**	On-OFF	OFF
	Vedere schema pagina 368. - On: funzione attiva - OFF: funzione non attiva Parametro accessibile solo se il relè R1 è stato precedentemente assegnato alla funzione "relè d'isolamento" e se le funzioni "forzatura arresto ruota libera", "collegamento dell'avviatore sull'avvolgimento a triangolo del motore" e "preriscaldamento" non sono state configrate. Configurare un ingresso LI = LIC. 255 motori max.		
ULn	**Tensione rete**	da 170 a 460 V (ATS48••Q) da 180 a 790 V (ATS48••Y)	400 V (ATS48•• Q) 460 V (ATS48•• Y)
	Questo parametro serve a calcolare la potenza visualizzata (parametri LPr e LAP del menu SUP). La precisione della visualizzazione dipende dalla regolazione corretta di questo parametro.		

Codice	Descrizione	Campo di regolazione	Preregolazione di base
FrC	**Frequenza rete**	50-60-AUt	AUt
	- 50: 50 Hz (tolleranza di controllo del difetto frequenza FrF = ± 20 %). - 60: 60 Hz (tolleranza di controllo del difetto frequenza FrF = ± 20 %). - AUt: riconoscimento automatico della frequenza di rete da parte dell'avviatore con una tolleranza di controllo del difetto frequenza FrF = ± 5 %. La scelta dei valori 50 e 60 è consigliata in caso di alimentazione con gruppo elettrogeno, tenuto conto dell'ampia tolleranza.		
rPr	**Reset dei kWh o del tempo di funzionamento**	no-APH-trE	no
	- no: funzione non attiva - APH: reset dei kWh (1) - trE: reset del tempo di funzionamento Una conferma dell'ordine di reset deve essere fatta con ENTER. Le azioni di APH e trE sono immediate quindi il parametro torna automaticamente su no.		
FCS	**Ritorno alle regolazioni di base**	no-YES	no
	Permette di reinizializzare tutti i parametri al valore "preregolazione di base". - no: funzione non attiva - YES: funzione attiva, per essere presa in conto richiede una pressione prolungata (2 s circa), quindi conferma mediante lampaggiamento del valore visualizzato. Il ritorno a no del parametro FCS è quindi automatico in seguito alla pressione del tasto ESC. **Parametro non modificabile tramite terminale remotato.**		

(1) Il valore numerico relativo alla grandezza "kWh consumati" è visibile solamente con il software PowerSuite o tramite comunicazione ModBus (indirizzo W4074).

Menu Configurazione degli ingressi/uscite IO

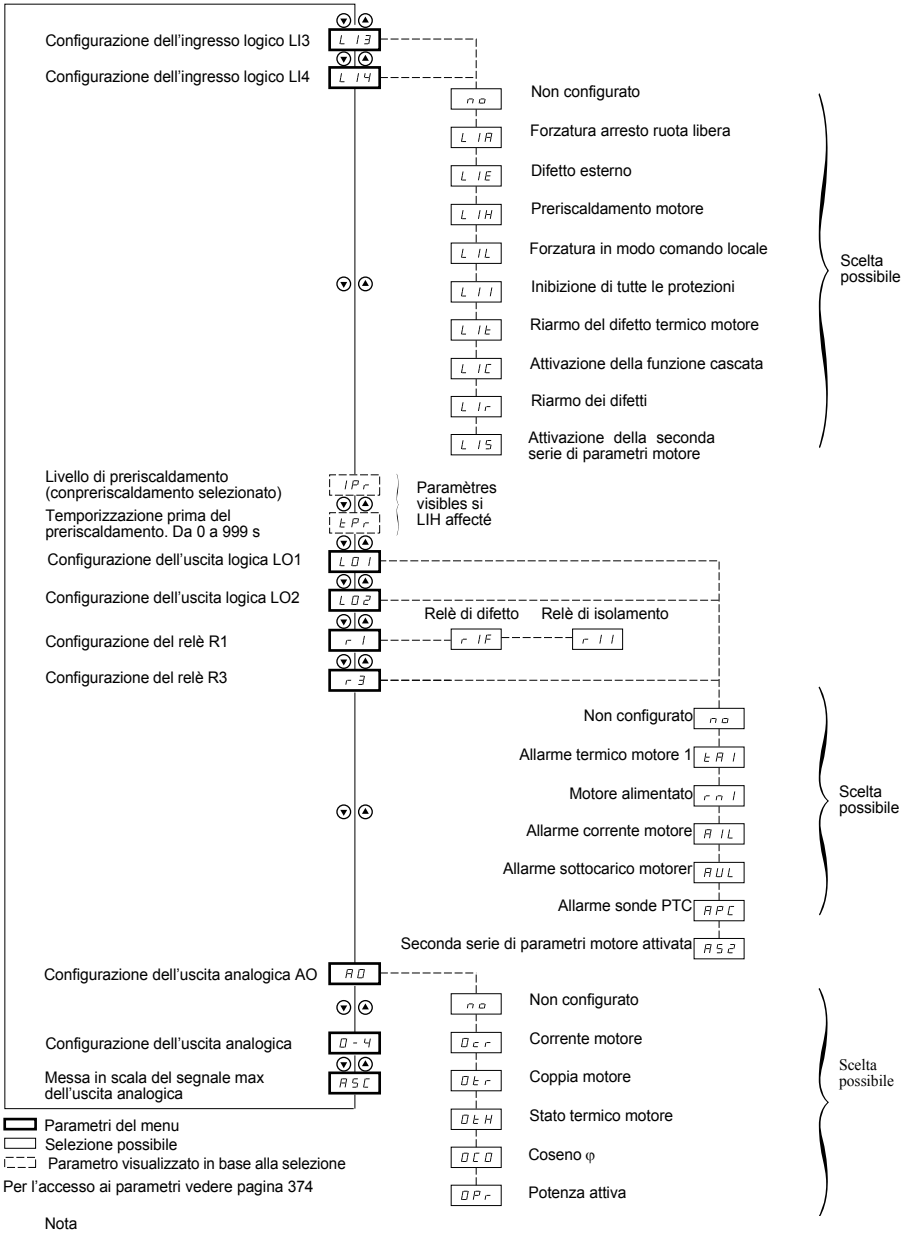

Per l'accesso ai parametri vedere pagina 374

Nota

Ingresso logico RUN: non configurabile
Ingresso logico STOP: non configurabile
Comando del contattore di by-pass avviatore: non configurabile (R2)

Menu Configurazione degli ingressi/uscite IO

La modifica dei parametri di configurazione degli ingressi/uscite è possibile solo a motore fermo.

Codice	Descrizione	Campo di regolazione	Preregolazione di base
L I3 L I4	**Ingressi logici**		LIA LIL

La funzione scelta è attiva se l'ingresso è sotto tensione.
- no: non configurata.
- LIA: forzatura arresto ruota libera alla comparsa di un comando di STOP. Questa scelta non appare se il parametro CSC del menu drC è su "On". Forza la configurazione dell'arresto a tipo ruota libera, ma non comanda l'arresto.
- LIE: difetto esterno. Permette all'avviatore di prendere in conto un difetto utente esterno (livello, pressione, ecc...). Il motore si ferma a ruota libera e l'avviatore visualizza EtF.
- LIH: (1) preriscaldamento motore. Questa scelta non appare se il parametro CSC del menu drC è impostato su "On". Permette di proteggere il motore contro il gelo o contro differenze di temperatura in grado di provocare della condensa. All'arresto del motore una corrente regolabile IPr lo attraversa al termine di una temporizzazione regolabile tPr, se l'ingresso è attivato. Questa corrente riscalda il motore senza provocarne la rotazione. IPr e tbr devono essere regolati (vedere qui di seguito).

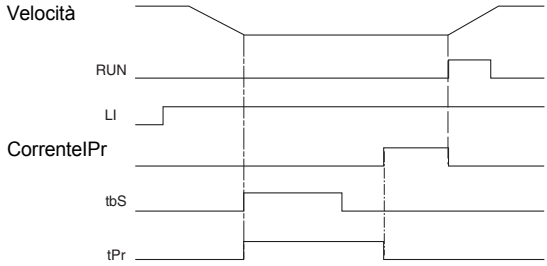

Il preriscaldamento è effettuato quando l'ingresso è sotto tensione e il motore fermo, al termine delle temporizzazioni tPr e tbS (menu PrO). Il preriscaldamento si arresta se l'ingresso viene disattivato o se viene dato un ordine di marcia o ancora se viene azionato l'ingresso STOP.
- LIL: forzatura in modo comando locale. In caso di utilizzo del collegamento seriale permette di passare dal modo in linea (comando mediante collegamento seriale) al modo locale (comando tramite morsettiera).
- LII: (1) inibizione di tutte le protezioni. Attenzione questo tipo di utilizzo implica la perdita della garanzia dell'avviatore. Consente la marcia forzata dell'avviatore nei casi di emergenza (rimozione dei fumi ad esempio).
- LIt: riarmo del difetto termico motore.
- LIC: attivazione della funzione cascata. In questo caso la protezione termica motore viene disattivata e il relè R1 deve essere configurato come relè d'isolamento. Permette di avviare e decelerare più motori identici in successione con un solo avviatore (vedere schema di applicazione).
- LIr: reset dei difetti riarmabili.
- LIS: attivazione della seconda serie di parametri motore. Permette di avviare e di decelerare due motori diversi in serie o un motore con due configurazioni diverse con un solo avviatore.

(1) Per essere validata questa configurazione richiede la pressione del tasto ENT per 10 s. (Conferma mediante lampaggiamento del valore visualizzato a display).
Parametro non modificabile tramite terminale remotato.

ITALIANO

Codice	Descrizione	Campo di regolazione	Preregolazione di base
IPr	**Livello di preriscaldamento**	da 0 a 100 %	0 %
	Questo parametro appare in seguito all'assegnazione di LI3 o de LI4 alla funzione LIH: preriscaldamento motore. Permette di regolare la corrente di preriscaldamento. Per regolare il livello di corrente motore, utilizzare un amperometro a lettura corrente efficace vera. Il parametro In non ha alcuna influenza sulla corrente IPr. **ATTENZIONE** **RISCHIO DI DANNI AL MOTORE** Se la frequenza di linea è fluttuante, è obbligatorio utilizzare un dispositivo esterno per monitorare la frequenza e disattivare la funzione di preriscaldamento in caso di fluttuazioni. **Il mancato rispetto di queste istruzioni può causare danni alle apparecchiature.**		
tPr	**Temporizzazione prima del preriscaldamento**	da 0 a 999 mn	5 mn
	Questo parametro appare in seguito all'assegnazione di LI3 o de LI4 alla funzione LIH: preriscaldamento motore. Il preriscaldamento è attivato quando l'ingresso è sotto tensione, trascorse le temporizzazioni tPr e tbS (menu PrO).		
LO1 LO2	**Uscite logiche**		tAI rnI
	- no: non configurata. - tAI: allarme termico motore. Vedere pagina 369. - rnI: motore alimentato (informa che nel motore è potenzialmente presente della corrente). - AIL: allarme corrente motore (soglia OIL e tempo tOL del menu PrO superati). Vedere "Funzione attiva solamente in regime stabilito.", pagina 384. - AUL: allarme sottocarico motore (soglia LUL e tempo tUL del menu PrO superati). Vedere pagina 383. - APC: allarme sonde PTC motore. Vedere "Attivazione controllo motore con sonde PTC", pagina 372. - AS2: seconda serie di parametri motore attivata. Vedere LIS "Ingressi logici", pagina 391.		
r1	**Relè R1**		rIF
	- r1F: relè di difetto. Il relè R1 viene attivato quando l'avviatore è sottotensione (controllo CL1/ CL2 al minimo). Il relè R1 viene disattivato alla comparsa di un difetto, con passaggio del motore a ruota libera. Vedere il caso particolare con funzione riavviamento automatico attivata e Difetti - cause - procedure d'intervento, pagina 405 - 410 - r1I: relè d'isolamento. Il relè R1 è destinato al comando del contattore di linea a partire dagli ordini di comando RUN e STOP e alla segnalazione di un difetto. Il relè R1 viene attivato in seguito ad un ordine di marcia RUN (o di preriscaldamento e disattivato al termine della frenatura, della decelerazione, o al momento del passaggio a ruota libera dopo un comando di arresto STOP. Viene disattivato anche alla comparsa di un difetto, con passaggio del motore a ruota libera.		
r3	**Relè R3**		rnI
	- no: non configurata. - tAI: allarme termico motore. Vedere pagina 369. - rnI: motore alimentato ((informa che nel motore è potenzialmente presente della corrente). - AIL: allarme corrente motore (soglia OIL e tempo tOL del menu PrO superati). Vedere "Funzione attiva solamente in regime stabilito.", pagina 384. - AUL: allarme sottocarico motore (soglia LUL e tempo tUL del menu PrO superati). Vedere pagina 383. - APC: allarme sonde PTC motore. Vedere "Attivazione controllo motore con sonde PTC", pagina 372. - AS2: seconda serie di parametri motore attivata. Vedere LIS "Ingressi logici", pagina 391.		

Relè R2 di fine avviamento (non configurabile)

Il relè di fine avviamento R2 viene inserito quando l'avviatore è sotto tensione, non presenta alcun difetto e la fase di avviamento del motore è conclusa. Viene disinserito in seguito ad un comando di arresto e in caso di difetto. Comprende un contatto in chiusura (NO).

Può essere utilizzato per autorizzare il by-pass dell'ATS 48 a fine avviamento.

Codice	Descrizione	Campo di regolazione	Preregolazione di base
AO	**Uscita analogica**		OCr
	- no: non configurata - OCr: corrente motore - Otr: coppia motore - OtH: stato termico motore - OCO: cos φ - OPr: potenza attiva		
O4	**Configurazione del tipo di segnale emesso dall'uscita AO**	020 - 420	020
	- 020: segnale 0 - 20 mA - 420: segnale 4 - 20 mA		
ASC	**Messa in scala del segnale max dell'uscita analogica**	da 50 a 500 %	200
	In percentuale del valore nominale del parametro configurato o di 1 per il cos φ.		

Menu Parametri 2° motore St2

I parametri del 1° o 2° motore sono selezionati dall'ingresso logico (LIS). La presa in considerazione dei parametri motore selezionati viene effettuata:

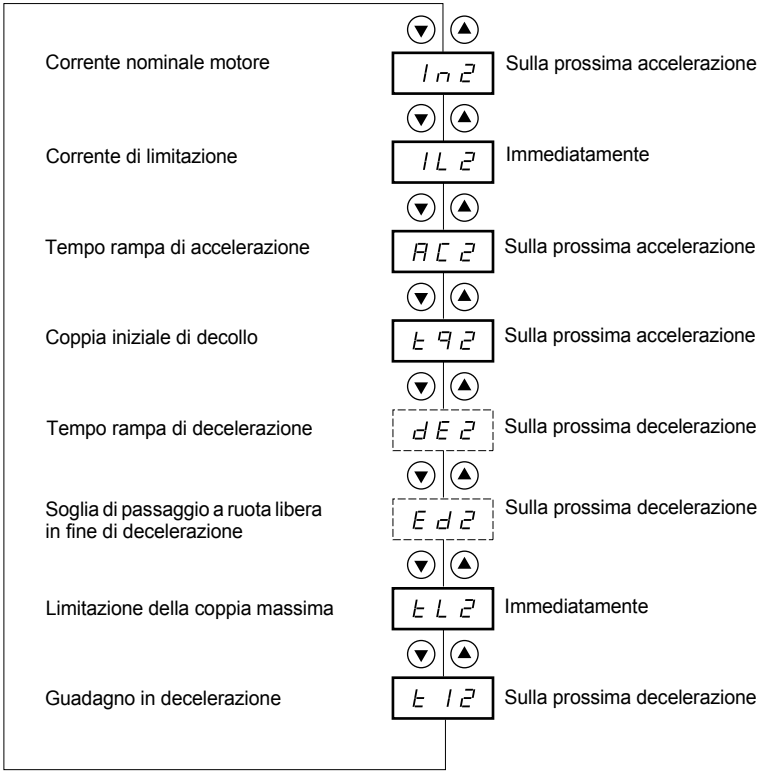

Parametri del menù

Parametro visualizzato in base alla selezione e alla configurazione di StY nel menu SEt

Menu Parametri 2° motore St2

Questo menu è visibile solo se un ingresso logico è assegnato alla funzione attivazione della seconda serie di parametri motore (LIS) nel menu Configurazione degli ingressi/uscite I O.

Codice	Descrizione	Campo di regolazione	Preregolazione di base
In2	**Corrente nominale motore**	da 0,4 a 1,3 ICL	(1)
	Regolare il valore della corrente nominale motore indicata sulla targa motore, anche nel caso in cui l'avviatore sia collegato sull'avvolgimento a triangolo del motore (PrO). Verificare che la corrente sia compresa tra 0,4 e 1,3 ICL (ICL: Calibro dell'avviatore). Vedere "Associazione avviatore-motore", pagina 342.		
IL2	**Corrente di limitazione**	da 150 a 700 % di In, limitato a 500 % di ICL	400 % di In
	La corrente di limitazione IL2 si esprime in % di In2. È limitata a 500 % di ICL (calibro avviatore, vedere le tabelle "Associazione avviatore-motore", pagina 342). Corrente di limitazione = IL2 x In2 esempio 1: In2 = 21 A, IL2 = 300 %, corrente di limitazione = 300 % x 22 A = 66 A esempio 2: ATS 48C21Q, con ICL = 210 A In2 = 195 A, IL2 = 700 %, corrente di limitazione = 700 % x 195 = 1365, limitata a 500 % x 210 = 1050 A		
AC2	**Tempo rampa di accelerazione**	da 1 a 60 s	15 s
	Si tratta del tempo di aumento della coppia di avviamento per passare da 0 alla coppia nominale Cn, ovvero la pendenza della rampa di crescita della coppia. 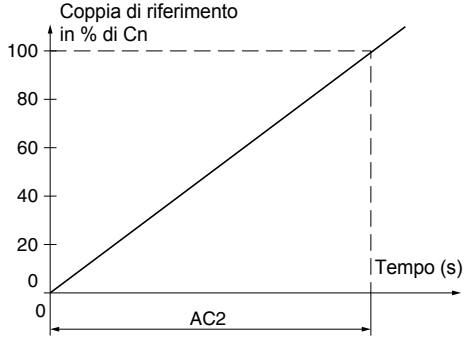 		

(1) Regolazione di base di In2 corrispondente al valore tipico di un motore normalizzato 4 poli in tensione 400V in classe 10 (per ATS 48•••Q).
Regolazione di base di In2 corrispondente al valore tipico di un motore normalizzato in base a NEC in tensione 460 V, in classe 10 (per ATS 48•••Y).

Codice	Descrizione	Campo di regolazione	Preregolazione di base
tq2	**Coppia iniziale di decollo**	da 0 a 100 % di Cn	20 %
	Regolazione della coppia iniziale nelle fasi di avviamento, variabile da 0 a 100 % della coppia nominale. 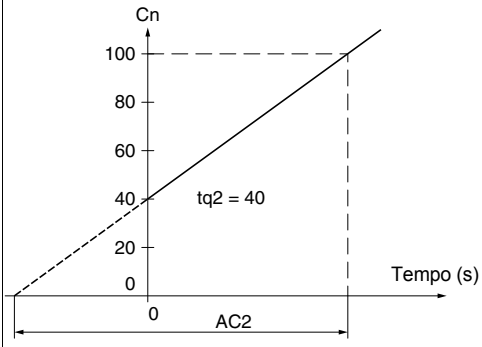 		
dE2	**Tempo rampa di decelerazione**	da 1 a 60 s	15 s
	Parametro accessibile solo se StY = -d-. Permette di regolare un tempo compreso tra 1 e 60 s, per passare dalla coppia stimata alla coppia nulla (= pendenza della rampa di riduzione della coppia in caso di arresto -d-). Questo consente di adattare la progressione della decelerazione evitando gli shock idraulici sulle applicazionipompe tramite modifica del riferimento di coppia. 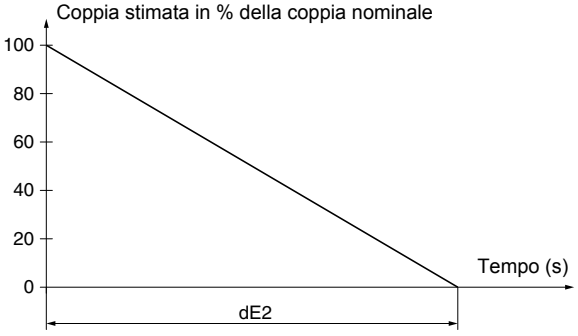 		

Codice	Descrizione	Campo di regolazione	Preregolazione di base
Ed2	**Soglia di passaggio a ruota libera a fine decelerazione**	da 0 a 100 %	20 %
	Parametro accessibile solo se StY = -d- e se il parametro CLP del menu Controllo (drC) è rimasto alla preregolazione di base (On). Permette di regolare il livello della coppia finale compreso tra 0 e 100 % della coppia stimata all'inizio della decelerazione. Nelle applicazioni del tipo pompe, il controllo della decelerazione non è necessariamente al di sotto di un livello di carico regolato mediante Ed2. Se la coppia stimata all'inizio della decelerazione è inferiore a 20, ovvero al 20 % della coppia nominale, la decelerazione controllata non è attivata, con passaggio in ruota libera. 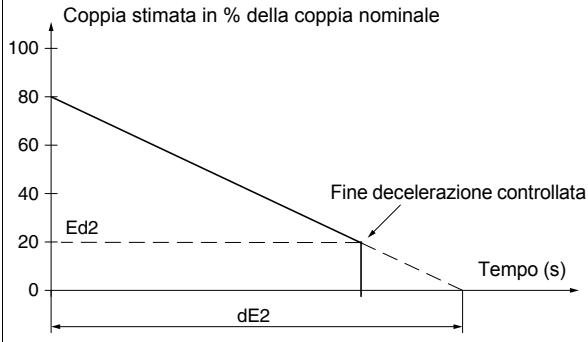 		
tL2	**Limitazione della coppia massima..**	da 10 a 200 % o OFF	OFF
	Permette di limitare il riferimento di coppia per evitare passaggi in ipersincrono sulle applicazioni a forte inerzia. Permette un avviamento a coppia costante se tq2 = tL2. - OFF: nessuna limitazione - da 10 a 200: regolazione della limitazione in % della coppia nominale		
t12	**Guadagno in decelerazione** (per comando in coppia).	10 à 50 %	40 %
	Parametro accessibile solo se CLP = On e se il parametro StY (menu regolazioni SEt) = -d-. Permette di eliminare le instabilità in decelerazione. Regolare in più o in meno in funzione delle oscillazioni.		

Menu Comunicazione COP

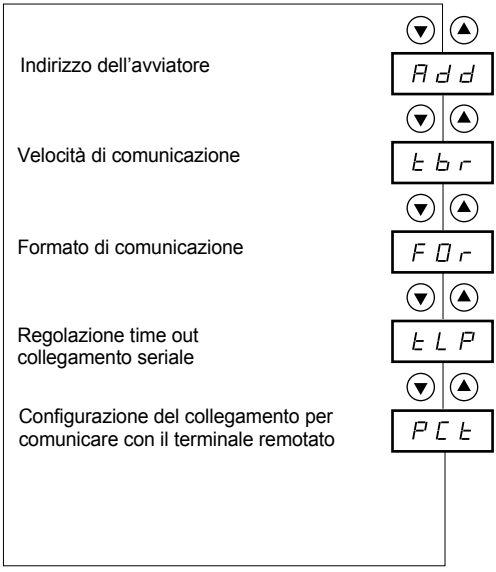

Parametri del menu

Menu Comunicazione COP

La modifica dei parametri del menu Comunicazione è possibile solo a motore fermo.
Protocollo di comunicazione utilizzato: Modbus.

Codice	Descrizione	Campo di regolazione	Preregolazione di base
Add	**Indirizzo dell'avviatore** mediante collegamento seriale RS485.	da 0 a 31	0
tbr	**Velocità di comunicazione** in kilobit al secondo.	4,8 - 9,6 - 19,2	19,2
FOr	Formato di comunicazione 8o1: 8 bit di dati, parità dispari, 1 bit di stop 8E1: 8 bit di dati, parità pari, 1 bit di stop 8n1: 8 bit di dati, senza parità, 1 bit di stop 8n2: 8 bit di dati, senza parità, 2 bit di stop		8n1
tLP	**Regolazione del time out del collegamento seriale (1)**	da 0,1a 60 s	5 s
PCt	**Configurazione del collegamento seriale per comunicare con il terminale remotato** On: funzione attiva. Configura temporaneamente l'avviatore (tbr e FOr) per comunicare con il terminale re remotato, da utilizzare nel caso i parametri tbr e For non siano impostati ai valori di fabbrica. OFF: funzione non attiva. **PCt torna su OFF all'interruzione della tensione controllo. Alla messa sotto tensione seguente i parametri tbr e FOr tornano alla configurazione iniziale**		OFF

(1) Accertarsi che il tempo regolato sia compatibile con la sicurezza di funzionamento della macchina.

ITALIANO

Menu Parametro visualizzato SUP

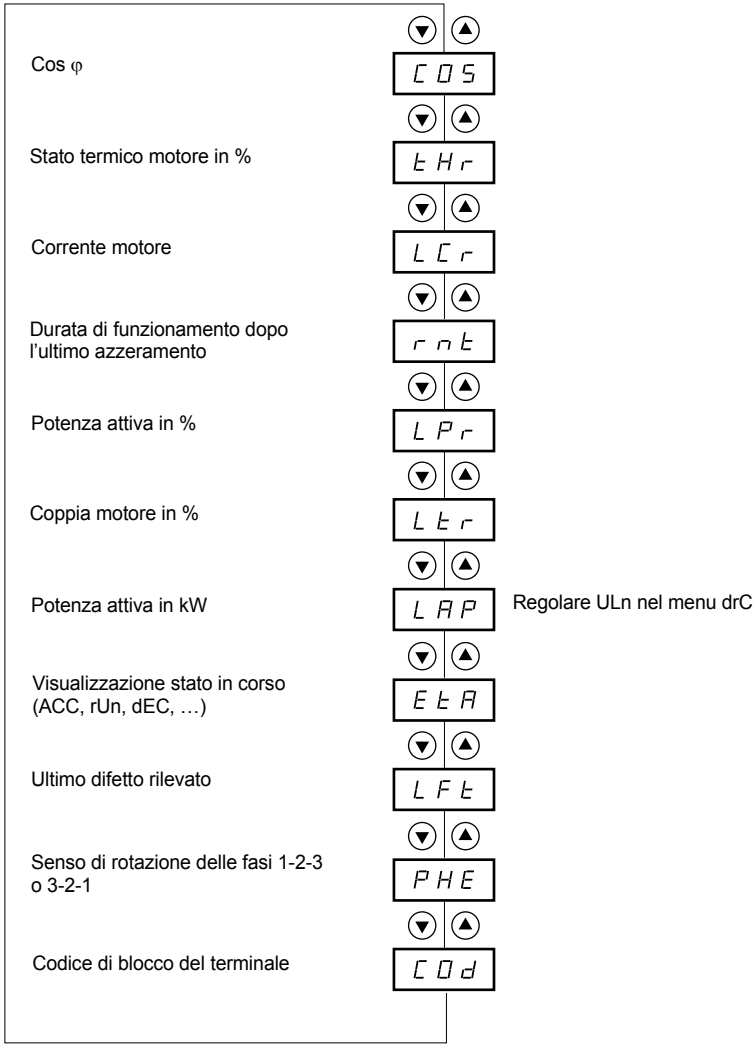

Menu Parametro visualizzato SUP

La modifica del parametro da visualizzare è possibile sia con motore fermo che in funzione.
Nella preregolazione di base la corrente motore è visualizzata (parametro LCr).
Il valore scelto viene memorizzato nel modo seguente:

- 1° pressione del tasto ENT: la scelta è provvisoria e sarà cancellata alla messa fuori tensione successiva.
- 2° pressione del tasto ENT per 2 secondi: il valore a display lampeggia, le scelta è definitiva a meno di modifica

Codice	Parametro	Unità
COS	**Cos** φ	0,01
tHr	Stato termico motore Varia da 0 a 125 % 100 % corrisponde allo stato termico nominale per la corrente In regolata.	%
LCr	Corrente motore In ampere fino a 999 A (esempi: 01.5 = 1,5 A ; 15.0 = 15 A ; 150 = 150 A) In kilo-ampere a partire da 1000 A (esempi: 1.50 = 1500 A ; 1.15 = 1150 A	A o kA
rnt	**Tempo di funzionamento** in ore dall'ultimo reset. In ore fino a 999 h (esempi: 001 = 1 h ; 111 = 111 h) In kilo-ore da 1000 a 65535 (esempi: 1.11 = 1110 h ; 11.1 = 11100 h) Oltre le 65535 h (65.5) il valore viene resettato Il tempo di funzionamento viene conteggiato quando il motore non è fermo ovvero all'innesco dei tiristori (riscaldamento, accelerazione, regime permanente, decelerazione, frenatura) e in regime permanente con by-pass. Il reset del contaore può essere effettuato in linea con la parola di comando e a terminale fermo. Alla messa fuori tensione della parte controllo il contaore viene salvato nella memoria EEPROM.	h o kh
LPr	Potenza attiva Varia da 0 a 255 % 100 % corrisponde alla potenza alla corrente nominale e alla piena tensione.	%
Ltr	Coppia motore Varia da 0 a 255 % 100 % corrisponde alla coppia nominale.	%
LAP	Potenza attiva in kW Questo parametro richiede di configurare il valore esatto della tensione di rete ULn nel menu drC.	kW
EtA	Visualizzazione stato in corso nLP: avviatore senza ordine di marcia e potenza non alimentata rdY: avviatore senza ordine di marcia e potenza alimentata tbS: temporizzazione di avviamento non terminata ACC: accelerazione in corso dEC: decelerazione in corso rUn: marcia in regime stabilito brL: frenatura in corso CLI: avviatore in limitazione di corrente nSt: forzatura arresto ruota libera tramite collegamento seriale	
LFt	**Ultimo difetto rilevato** (vedere pagina 405). Quando non viene memorizzato alcun difetto il display visualizza il messaggio **nOF**. Quando i difetti sono stati inibiti, il display visualizza **InH**.	
PHE	**Senso di rotazione delle fasi** viste dall'avviatore 123: senso diretto (L1-L2-L3) 321: senso inverso (L3-L2-L1)	

Menu Parametro visualizzato SUP

Codice	Parametro
COd	Codice di blocco del terminale Permette di proteggere la configurazione dell'avviatore con un codice di accesso. **Attenzione: Prima di inserire un codice non dimenticare di annotarlo con cura** • **OFF**: nessun codice blocca l'accesso - Per bloccare l'accesso comporre un codice (da 2 a 999) aumentando il valore a display con il tasto ▲ quindi premere il tasto ENT. A display appare il messaggio "On": l'accesso al parametro è bloccato. • **On**: un codice blocca l'accesso (da 2 a 999) - **Per sbloccare l'accesso** comporre il codice aumentando il valore a display con il tasto ▲ quindi premere il tasto ENT. A display resta visualizzato il codice, l'accesso è sbloccato fino alla messa fuori tensione successiva. Alla nuova messa sotto tensione l'accesso al parametro torna bloccato. - **Se viene inserito un codice errato**, il valore a display torna su "On", l'accesso all parametro resta bloccato. • **XXX:** l'accesso al parametro è sbloccato (il codice resta visualizzato). - **Per riattivare il blocco con lo stesso codice**, con l'accesso al parametro sbloccato, tornare a "On" con il tasto ▼, quindi premere il tasto ENT. "On" resta visualizzato a display e l'accesso al parametro è bloccato. - **Per bloccare l'accesso con un nuovo codice**, con l'accesso al parametro sbloccato, comporre il nuovo codice aumentando il valore a display con ▲ o ▼ quindi premere il tasto ENT.A display viene visualizzato "On" e l'accesso al parametro è bloccato. - **Per eliminare il blocco**, con l'accesso al parametro sbloccato tornare su "OFF" con il tasto ▼, quindi premere il tasto ENT. "OFF" resta visualizzato a display e l'accesso al parametro è sbloccato e lo resta anche in seguito alla messa fuori tensione e successiva rimessa in tensione.

Quando l'accesso viene bloccato con un codice, restano accessibili solo i parametri di controllo, con la sola possibilità di scelta provvisoria del parametro visualizzato.

Tabella di compatibilità

Le scelta delle funzioni può essere limitata dall'incompatibilità di interruzione di alcune funzioni.
Le funzioni non inserite nella tabella non sono oggetto d'incompatibilità.

Funzioni	Arresto in decelerazione	Arresto in frenatura dinamica	Forzatura arresto ruota libera	Protezione termica	Perdita di una fase motore	Cablaggio sull'avvolgimento a triangolo del motore	Prove su motore di piccolo calibro	Cascata	Preriscaldamento
Arresto in decelerazione									
Arresto in frenatura dinamica									
Forzatura arresto ruota libera									
Protezione termica									**(2)**
Perdita di una fase motore									
Cablaggio sull'avvolgimento a triangolo motore									
Prove su motore di piccolo calibro									
Cascata									
Preriscaldamento				**(2)**					

Funzioni compatibili
Funzioni incompatibili
Senza oggetto

(1) Perdita di fase motore non rilevata

(2) Durante il preriscaldamento motore, la protezione termica non è garantita. Regolare correttamente la corrente di preriscaldamento IPr

Manutenzione

L'Altistart 48 non richiede manutenzione preventiva. Si consiglia tuttavia, ad intervalli regolari, di:
- verificare lo stato e il serraggio delle connessioni
- assicurarsi che la temperatura vicino all'apparecchio resti ad un livello accettabile e che la ventilazione resti efficace (durata media dei ventilatori: da 3 a 5 anni a seconda delle condizioni d'impiego)
- pulire i filtri del sistema di raffreddamento se necessario.

Assistenza alla manutenzione

Nel caso in cui si verificassero anomalie alla messa in servizio o in fase d'impiego, assicurarsi per prima cosa che siano state osservate tutte le raccomandazioni relative alle condizioni ambientali, al montaggio e ai collegamenti.

Il primo difetto rilevato viene memorizzato e visualizzato sul display: l'avviatore si blocca, i relè R1 e R2 cambiano stato a seconda della loro configurazione.

Reset del difetto

Interrompere l'alimentazione dell'avviatore in caso di difetto non riarmabile.
Attendere lo spegnimento totale del display.
Cercare la causa del difetto ed eliminarla.
Ripristinare l'alimentazione: questa operazione consente di resettare il difetto se questo è effettivamente scomparso.

In alcuni casi può verificarsi un riavviamento automatico in seguito alla scomparsa del difetto, se la funzione è stata precedentemente programmata.

Menu visualizzazione

Consente la prevenzione e la ricerca delle cause dei difetti mediante visualizzazione dello stato dell'avviatore e dei valori correnti.

Ricambi e riparazioni

Consultare la rete commerciale Schneider Electric.

Difetti - cause - procedure d'intervento

Come regola generale quando si verifica un'anomalia alla messa in funzione dell'avviatore è preferibile procedere ad una regolazione di base e rivedere le regolazioni passo per passo.

Mancato avviamento senza segnalazione di difetto

- Nessun valore visualizzato a display: verificare la presenza della rete sull'alimentazione controllo CL1/CL2 (vedere pagina 357)
- Verificare che il codice visualizzato non corrisponda allo stato normale dell'avviatore (vedere pagina 375)
- Verificare la presenza degli ordini di marcia RUN/STOP (vedere pagina 358)

Difetti non riarmabili

Alla comparsa di questo tipo di difetto l'avviatore si blocca e il motore passa a ruota libera.

Segnalazione:
- Apertura del relè fine avviamento R2
- Apertura del relè R1 (in seguito al blocco dell'avviatore)
- Lampeggiamento del codice difetto sul display
- Memorizzazione degli ultimi 5 difetti, visibili con l'atelier software PowerSuite

Condizioni di riavviamento:
- Scomparsa delle cause del difetto
- Interruzione quindi ripristino dell'alimentazione controllo

Difetto	Causa probabile	Procedura d'intervento
InF	**Difetto interno**	Scollegare e quindi ripristinare l'alimentazione controllo. Se il difetto persiste rivolgersi alla rete commerciale Schneider Electric.
OCF	Sovracorrente: • cortocircuito impedente in uscita dall'avviatore • cortocircuito interno • contattore di by-pass incollato • surclassamento avviatore	Mettere fuori tensione l'avviatore. • Verificare i cavi di collegamento e l'isolamento motore • Verificare i tiristori • Verificare il contattore di by-pass (contatto incollato) • Verificare il valore del parametro bSt nel menu drC pagina 412.
PIF	Inversione delle fasi. La rotazione delle fasi della rete non concorda con la selezione effettuata tramite PHr nel menu Protezione.	Invertire due fasi della rete o impostare PHr = no
EEF	**Difetto memoria interna**	Scollegare e quindi ripristinare l'alimentazione controllo. Se il difetto persiste rivolgersi alla rete commerciale Schneider Electric

Difetti riarmabili in seguito alla scomparsa delle cause

Quando si verifica questo tipo di difetto l’avviatore si blocca e il motore passa a ruota libera.

Segnalazione:
- Apertura del relè fine avviamento R2
- Apertura del relè R1, solo se configurato come relè d’isolamento
- Lampeggiamento del codice difetto sul display, per tutta la durata della presenza del difetto
- Memorizzazione degli ultimi 5 difetti, visibili con l’atelier software PowerSuite

Condizioni di riavviamento:
- Scomparsa delle cause del difetto
- In comando 2 fili, è necessario che l’ordine di marcia sia mantenuto sull’ingresso RUN
- In comando 3 fili, è necessario un nuovo ordine di marcia (fronte di salita) sull’ingresso RUN

Difetto	Causa probabile	Procedura d’intervento
CFF	**Configurazione non valida** alla messa sotto tensione.	• Tornare alle regolazione di base nel menu controllo drC. • Riconfigurare l’avviatore
CFI	**Configurazione non valida** La configurazione caricata nell’avviatore mediante collegamento seriale è incoerente.	• Verificare la configurazione precedentemente caricata. • Caricare una configurazione coerente

Difetti riarmabili manuellement con la funzione riavviamento automatico (1)

Quando si verifica questo tipo di difetto l’avviatore si blocca e il motore passa a ruota libera.

Segnalazione con riavviamento automatico:
- Apertura del relè fine avviamento R2.
- Apertura del relè R1, solo se configurato come relè d’isolamento. R1 resta chiuso se configurato come relè di difetto, vedere pagina 412.
- Lampeggiamento del codice difetto sul display, per tutta la durata della presenza del difetto.
- Memorizzazione degli ultimi 5 difetti, visibili con l’atelier software PowerSuite.

Condizioni di riavviamento per i difetti seguenti con riavviamento automatico (solo in comando 2 fili):
- Scomparsa delle cause del difetto.
- Ordine di marcia mantenuto sull’ingresso RUN.
- Esecuzione di 6 tentativi di riavviamento ad intervalli di 60 secondi l’uno dall’altro. Al sesto tentativo, se il difetto è sempre presente, l’avviatore diventa riarmabile manualmente (vedere pagina seguente) e R1 si apre se configurato come relè di difetto.

Difetto	Causa probabile	Procedura d’intervento
PHF (2)	**Perdita di una fase rete**	• Controllare la linea , la stabilità della frequenza, il collegamento all'avviatore e gli eventuali dispositivi ubicati tra la linea e l'avviatore (contattore, fusibili, interruttore, ecc.). • Se si utilizza un contattore di by-pass controllare il meccanismo (usura, gioco meccanico, lubrificazione, ostruzioni...)
	Perdita di una fase motore Se la corrente motore scende al di sotto di una soglia regolabile PHL in una fase per 0,5 s o nelle tre fasi per 0,2 s. Questo difetto è configurabile nel menu protezione PrO, parametro PHL.	• Verificare il collegamento del motore (morsetti T1, T2, T3), e i dispositivi eventualmente installati tra la rete e l’avviatore (contattore, fusibili, interruttori, ecc...) • Verificare lo stato del motore. • Verificare che la configurazione del parametro PHL sia compatibile con il motore utilizzato.
FrF (3)	**Frequenza rete fuori tolleranza** Questo difetto è configurabile nel menu Regolazioni avanzate drC, parametro FrC.	• Verificare la rete. • Verificare che la configurazione del parametro FrC sia compatibile con la rete utilizzata (gruppo elettrogeno ad esempio).

(1) Se la funzione riavviamento automatico non è selezionata, vedere pagina 409 per la segnalazione e le condizioni di riavviamento di questi difetti
(2) Dopo ogni attivazione dell'alimentazione di controllo, il rilevamento FRF viene effettuato solo alla prima attivazione dell'alimentazione principale.
(3) Alle successive attivazioni dell'alimentazione principale, una frequenza errata genererà l'errore PHF di desincronizzazione.

Difetti riarmabili manuellement con la funzione riavviamento automatico (1)

Condizioni di riavviamento per i seguenti difetti:
- Scomparsa delle cause del difetto
- Ordine di marcia mantenuto (comando 2 fili solamente)

Difetto	Causa probabile	Procedura d’intervento
USF	**Difetto alimentazione potenza** all’ordine di marcia.	• Vérifier la tension et le circuit d’alimentation puissance.
CLF	Perdita alimentazione controllo	• Interruzione superiore a 200 ms su CL1/CL2

(1) Se la funzione riavviamento automatico non è selezionata, vedere pagina 409 per la segnalazione e le condizioni di riavviamento di questi difetti

Difetti - cause - procedure d'intervento

Difetti riarmabili manualmente uniquement.

Quando si verifica questo tipo di difetto, l'avviatore si blocca e il motore passa a ruota libera.

Segnalazione:
- Apertura del relè fine avviamento R2.
- Apertura del relè R1.
- Lampeggiamento del codice difetto sul display, per tutta la durata della presenza del difetto.
- Memorizzazione degli ultimi 5 difetti, visibili con l'atelier software PowerSuite.

Condizioni di riavviamento:
- Scomparsa delle cause del difetto.
- Un ordine di marcia (comando 2 fili o 3 fili, richiede un fronte di salita sull'ingresso RUN) per riarmare il difetto (1).
- Un altro ordine di marcia (comando 2 fili o 3 fili, richiede un fronte di salita sull'ingresso) per avviare il motore.

Difetto	Causa probabile	Procedura d'intervento
SLF	**Difetto collegamento seriale**	• Verificare il collegamento della presa RS485.
EtF	**Difetto esterno**	• Verificare il difetto.
StF	**Avviamento prolungato**	• Verificare la meccanica (usura, duro meccanico, lubrificazione, ostacolo, ecc...). • Verificare il valore regolato di tLS nel menu PrO pagina 383. • Verificare il dimensionamento avviatore-motore rispetto alle esigenze meccaniche..
OLC	**Sovraccarico corrente.**	• Verificare la meccanica (usura, duro meccanico, lubrificazione, ostacolo, ecc...). • Verificare il valore dei parametri LOC e tOL nel menu PrO pagina 384.
OLF	**Difetto termico motore.**	• Verificare la meccanica (usura, duro meccanico, lubrificazione, ostacolo, ecc...). • Verificare il dimensionamento avviatore-motore rispetto alle esigenze meccaniche. • Verificare il valore del parametro tHP nel menu PrO pagina 383 e quello del parametro In nel menu SEt pagina 378. • Verificare l'isolamento elettrico del motore. • Attendere il raffreddamento del motore prima di riavviare.
OHF	**Difetto termico avviatore.**	• Verificare la meccanica (usura, duro meccanico, lubrificazione, ostacolo, ecc...). • Verificare il dimensionamento avviatore-motore rispetto alle esigenze meccaniche. • Verificare il funzionamento del ventilatore se integrato nell'ATS48 utilizzato; controllare che il passaggio dell'aria avvenga liberamente e la pulizia del radiatore. Accertarsi che siano stati osservate accuratamente le istruzioni d'installazione. • Attendere il raffreddamento dell'ATS48 prima di riavviare.

(1) Il riarmo su ordine di marcia è inattivo se LI è assegnato alla funzione "riarmo difetto (LIr)".

Difetti - cause - procedure d’intervento

Difetti riarmabili manualmente uniquement.

Difetto	Causa probabile	Procedura d’intervento
OtF	**Difetto termico motore rilevato dalle sonde PTC.**	• Verificare la meccanica (usura,duro meccanico, lubrificazione, ecc...). • Verificare il dimensionamento avviatore-motore in rapporto alle necessità della meccanica. • Verificare il valore del parametro PtC nel Menu PrO pagina 385. • Attendere il raffreddamento del motore prima di riavviare.
ULF	**Sottocarico motore.**	• Verificare il circuito idraulico. • Verificare i valori dei parametri LUL e tUL nel menù protezione PrO pagina 383
LrF	**Rotore bloccato** in regime permanente. Questo difetto è attivo solo in regime permanente con contattore di by-pass avviatore. Viene rilevato se la corrente in una fase è superiore o uguale a 5 In per più di 0,2 s	• Verificare la meccanica (usura, duro meccanico, lubrificazione, ostacolo,ecc...).
Err1	Possibile solamente sul terminale remotato: valori errati dei parametri tbr e For	• Configurazione tbr = 19,2 e For = 8n1 o PCt = vedere a pagina 399

Riarmo dei difetti mediante ingresso logico

Se un ingresso logico LI è configurato in "Riarmo del difetto termico motore" o in "Riarmo dei difetti riarmabili", è necessario:
- Un impulso sull’ingresso logico LI
- In comando 2 fili, il motore riavvia se l’ordine di marcia è mantenuto sull’ingresso RUN
- In comando 3 fili, il motore riavvia su un nuovo ordine di marcia (fronte di salita) sull’ingresso RUN

Tabelle di memorizzazione configurazione/regolazioni

Avviatore ATS 48.....
Eventuale n° di identificazione Cliente.....
Eventuale codice di accesso.....

Menu Regolazioni SEt

Codice	Regolazione di base	Regolazione cliente	Codice	Regolazione di base	Regolazione cliente
In	(1)		dEC	15 s	
ILt	400 %		EdC	20 %	
ACC	15 s		brC	50 %	
t90	20 %		EbA	20 %	
StY	-F-				

I parametri su fondo grigio vengono visualizzati se sono state configurate le funzioni corrispondenti.

Menu Protezione Pr0

Codice	Regolazione di base	Regolazione cliente	Codice	Regolazione di base	Regolazione cliente
tHP	10		tOL	10,0	
ULL	OFF		PHr	no	
LUL	60 %		tbS	2 s	
tUL	60 %		PHL	10 %	
tLS	OFF		PtC	OFF	
OIL	OFF		ArS	OFF	
LOC	80 %		rtH	no	

I parametri su fondo grigio vengono visualizzati se sono state configurate le funzioni corrispondenti.

(1) Dipende dal calibro dell'avviatore.

Tabelle di memorizzazione configurazione/regolazioni

Menu Regolazioni avanzate drC

Codice	Regolazione di base	Regolazione cliente	Codice	Regolazione di base	Regolazione cliente
tLI	OFF		LSC	50 %	
bSt	OFF		tIG	40 %	
dLt	OFF		CSC	OFF	
SSt	OFF		ULn	(1)	
CLP	On		FrC	AUt	

I parametri su fondo grigio vengono visualizzati se sono state configurate le funzioni corrispondenti.

Menu Configurazione degli ingressi/uscite IO

Codice	Regolazione di base	Regolazione cliente	Codice	Regolazione di base	Regolazione cliente
LI3	LIA		r1	r1I	
LI4	LIL		r3	rn1	
IPr	0 %		AO	OCr	
tPr	5 mn		O4	020	
LO1	tA1		ASC	200	
LO2	rn1				

I parametri su fondo grigio vengono visualizzati se sono state configurate le funzioni corrispondenti.

(1) -ATS 48•••Q : 400 V
-ATS 48•••Y : 460 V

ITALIANO

Tabelle di memorizzazione configurazione/regolazioni

Menu Parametri 2° motore 5t2

Menu visibile solo se un ingresso logico è assegnato alla funzione attivazione della seconda serie di parametri motore (LIS) nel menu Configurazione degli ingressi/uscite I O.

Codice	Regolazione di base	Regolazione cliente	Codice	Regolazione di base	Regolazione cliente
In2	(1)		dE2	15 s	
IL2	400 %		Ed2	20 %	
AC2	15 s		tL2	OFF	
t92	20 %		t I2	40 %	

Menu Comunicazione COP

Codice	Regolazione di base	Regolazione cliente	Codice	Regolazione di base	Regolazione cliente
Add	0		tLP	5 s	
tbr	19,2 kBits / s		PCt	OFF	
FOr	8n1				

(1) Dipende dal calibro dell'avviatore

按照规定，对设备或机器的任何电气或机械部件进行操作之前， ATS 48 的控制 (CL1-CL2) 和电源 (1/L1-3/L2-5/L3) 必须断开。
在运行过程中可以通过取消运行命令使电机停机。起动器保持通电。如果为了人员安全需要禁止突然重起动，则此电气锁定系统是不够的 : 必须在动力电路上安装一个断路器。

本起动器装有安全设备，当出现故障时，可以停止起动器工作继而使电机停机。电机自身可以通过机械锁定停机。另外，电压变化或电源故障也会导致停机。
如果导致停机的原因消失，则存在重新起动的可能，这将危及某些机器或设备的安全，特别是那些必须符合安全规范的机器或设备。在这种情况下用户必须采取措施预防自动重起动的发生，特别是在电机出现不合程序要求的停机时，要使用低速检测器切断起动器的电源。

本文档中介绍的产品和设备可能会因技术原因随时变更或修改。我们保留更改的权力。

起动器安装和设置必须符合国际和国内标准的要求。系统集成商有责任确保设备的合格性，必须遵守欧盟范围内其他国家的 EMC 规范。
本文档中的技术规范必须遵守，以符合 EMC 条款的基本要求。

ATS 48 必须被视为一个组件，它不是一部已经能够符合欧洲规范的机器或设备 (机械规范和电磁兼容性规范)。最终的集成商有责任确保其符合相关的标准。

目录

起动器设置步骤 ____ 416
出厂配置 ____ 418
初步建议 ____ 419
技术规格 ____ 420
操作建议 ____ 421
起动器 - 电机组合 ____ 424
尺寸 ____ 430
安装建议 ____ 432
壁挂式或落地式安装的壳体 ____ 433
电源端子 ____ 434
控制端子 ____ 439
接线 /RUN-STOP (运行 - 停机) 命令 ____ 440
应用接线图 ____ 441
热保护 ____ 451
显示组件和编程 ____ 455
远程操作盘选件 ____ 458
设定菜单 (Set) ____ 459
保护菜单 (PrO) ____ 464
高级设定菜单 (drC) ____ 468
I/O 菜单 (IO) ____ 472
第 2 电机参数菜单 (St2) ____ 476
通讯菜单 (COP) ____ 480
显示参数菜单 (SUP) ____ 482
兼容性表 ____ 485
维护 ____ 486
故障 - 原因 - 处理方法 ____ 487
配置 / 设定表 ____ 493

中文

1、ATS 48 的交货

- 检查印在标签上的起动器型号与定单相对应的提货单上标注的型号是否一致。
- 打开 ATS 48 的包装，确认在运输过程中没有发生损坏。

⚠ 警告

软起动器设备损坏

不要运行或安装已出现损坏迹象的任何软起动器或软起动器附件。
不按照说明操作可能导致人身伤亡或设备损坏。

2、竖直安装软起动器

根据 **20** 页和 **21** 页上的指导安装 **ATS 48**

3、按如下步骤连接 ATS 48:

- 请将软启动器接地
- 控制线路电源 (CL1 - CL2)，确保电源断开
- 主电源 (1/L1 - 3/L2 - 5/L3)，确保电源断开
- 电机 (2/T1 - 4/T2 - 6/T3)，确保电机电压与电源电压匹配

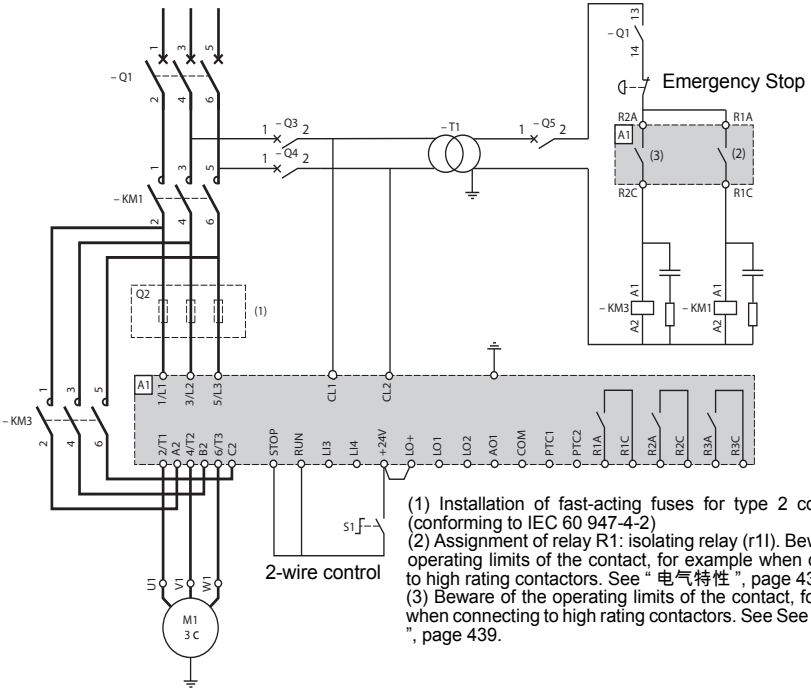

(1) Installation of fast-acting fuses for type 2 coordination (conforming to IEC 60 947-4-2)
(2) Assignment of relay R1: isolating relay (r1I). Beware of the operating limits of the contact, for example when connecting to high rating contactors. See " 电气特性 ", page 439.
(3) Beware of the operating limits of the contact, for example when connecting to high rating contactors. See See " 电气特性 ", page 439.

注意：关于其他接线，请参考 **441-444** 页
如果在电机三角形绕组中使用 ATS48●●●Q / ATS48●●●YS316，应遵循 10、 11 页的说明以及 31 页的图示。

4、控制部分 (CL1-CL2) 通电

- 在不使用电源部件以及不给出运行命令的情况下加电。
- 请检查 **S1** 是否打为开启状态
- 关闭 **Q1,** 然后 **Q3, Q4**
- 起动器显示 : nLP (指示电源断开)。

小心
软起动器损坏风险 • 检查 **CL1 - CL2** 上的电源 : ATS48●●●Q 必须为 220 - 415 V AC ATS48●●●Y 必须为 110 - 230 V AC 不遵守这些说明可能导致设备损坏。

5、调整 *In* 电机额定电流

- 参看电机铭牌上的电机额定电流值

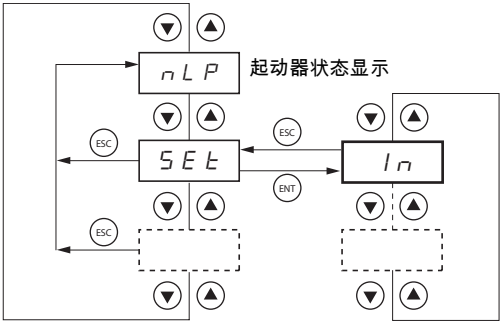

6、主电源部分通电 (1/L1 - 3/L2 - 5/L3)

- 关闭 **Q5**.
- 起动器显示 : rdY (指示起动器已通电并待机)。

7、启动电机

- 发送一个 “S1” 命令起动系统。

8、问题解决信息看

看 故障 - 原因 - 处理方法 **487** 页

小心
电机过热危险 ATS 48 起动器出厂配置用于不需特殊功能的标准应用场合。它具备 10 级的电机保护。 通过改变参数改变设定值，详见第 44 页。 在任何情况下 **In** 参数都必须设置为电机铭牌上指示的当前值。 不遵守这些说明可能导致设备损坏。

出厂配置

出厂设定值

ATS 48 出厂时已设定为普通的运行情况 :

- ATS 48 在电机电源上使用 (在电机绕组中未将其串入三角形绕组中)
- 电机额定电流 In:
  - ATS 48•••Q: 为标准 400V 4 极电机预置
  - ATS 48•••Y: 为 NEC 电流、 460V 电机预置
- 限制电流 (ILt): 电机额定电流的 400%
- 加速斜坡 (ACC): 15 秒
- 起动力矩 (tq0): 额定力矩的 20%
- 停机 (StY): 自由停车 (-F-)
- 电机热保护 (tHP): 10 级保护曲线
- 显示 : rdY (起动器待机)，有电源电压和控制电压，电机电流运行
- 逻辑输入 :
  - LI1: STOP (停机)
  - LI2: RUN (运行)
  - LI3: 强制自由停车 (LIA)
  - LI4: 强制本地模式 (LIL)
- 逻辑输出 :
  - LO1: 电机热报警 (tA1)
  - LO1: 电机已通电 (mI)
- 继电器输出 :
  - R1: 故障继电器 (rII)
  - R2: 起动结束旁路继电器
  - R3: 电机已通电 (mI)
- 模拟输出 :
  - AO 电机电流 (Ocr， 0-20mA)
- 通讯参数 :
  - 通过串口连接，起动器逻辑地址 (Add) 为 “0”
  - 传输速度 (tbr): 19200 比特每秒
  - 传输格式 (For): 8 位，无奇偶校验， 1 个停止位 (8nI)

如果上述值均符合实际应用，则起动器无须改变设定值即可使用。

搬运和存放

在安装前为保护起动器，应带着包装进行搬运和存放。

安装搬运

ATS 48 系列有 6 种大小的设备，其重量和尺寸各不相同。

小型起动器可以去除包装，无需吊装设备即可安装。

对于大型起动器必须使用吊装设备；为此其上均带有 “吊环”。必须遵守如下吊装方式：

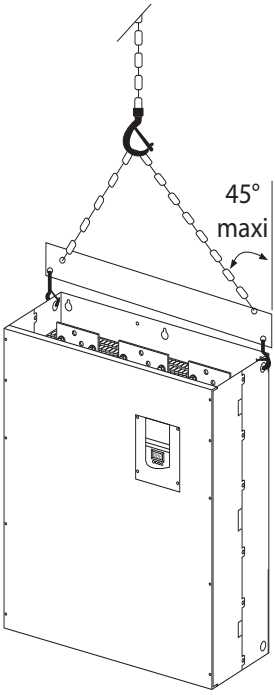

不要用电源轨道搬运起动器

环境

防护等级	• ATS 48D17 • 至 C11 • 为 IP20 • ATS 48C14 • 至 M12 • 为 IP00 (1)
耐振性	符合 IEC 68-2-6: • 2 至 13Hz 为 1.5mm 峰值 • 13 至 200Hz 为 1gn
抗冲击性	符合 IEC 68-2-27: 15g, 11ms
最大环境污染等级	3 级，符合 IEC 947-4-2
最大相对湿度	93% 无冷凝或滴水，符合 IEC 68-2-3
环境温度	贮存 : -25°C 至 +70°C 运行 : • 10°C 至 +40°C 不降容 • 最高 +60°C， 40°C 以上每升高 1°C 电流降低 2%
最大运行高度	1000 米不降容 (1000 米以上，每增加 100 米，电流降低 2%)
运行位置	垂直位置， ±10° 以内

(1) 防护等级为 **IP00** 的 **ATS 48** 起动器必须安装保护排以防止人员接触到带电部分。

有效力矩

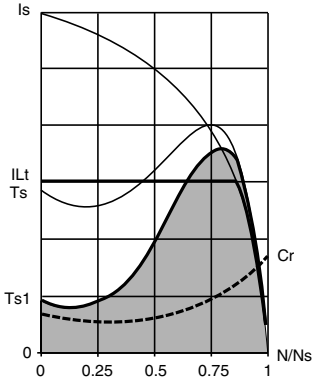

曲线 Ts 和 Is 表示异步电机直接起动。

曲线 Ts1 表示使用 ATS 48 可获得的总的力矩范围，它取决于限制电流 ILt。起动器的逐级起动由此范围内的电机力矩控制。

Tr: 阻力矩，它必须低于 Ts1 力矩。

选择软起动 - 软停止单元

S1 电机负载对应于恒载运行，允许获得热平衡。
S4 电机负载对应于周期运行，运行周期由起动、恒载运行和停止过程组成，该周期由负载系数表示。

必须根据应用类型（“标准” 或 “重载” ）和电机额定功率对 ATS 48 进行选择。“标准” 或 “重载” 型应用定义了电流限定值和电机负载 S1 和 S4 周期。

注意 : **ATS 48** 不要使用电机之外的其他负载 **(** 例如禁止使用变压器和电阻器 **)**。
不要将功率因数校正电容连接在由 **ATS 48** 控制的电机的端子上。

标准应用

例如 : 离心泵
在标准应用中， ATS 48 设计能够提供如下功能 :
- 在 S1 负荷中 : 冷态以 4In 电流持续 23 秒或 3In 电流持续 46 秒起动。
- 在 S4 负荷中 : 负载系数 50%，每小时起动 10 次，以 3In 持续 23 秒或 4In 电流起动 12 秒，或与此相当的热循环。

在此情况下，电机热保护必须符合 10 级保护等级。

重载应用

例如 : 研磨机
在重载应用中，ATS 48 设计用于 S4 负荷，负载系数为 50%，每小时起动 5 次，电流 4In 持续 23 秒或与此相当的热循环。
在此情况下，电机热保护必须符合 20 级保护等级。电流 **In** 决不能保持在出厂设定值，而必须设定为电机铭牌上所示的值。

注 : 起动器选型可以选大一级，例如对 11kW-400V、以电机负荷 S4 运行的电机可选用 ATS 48D17Q。
为此，应在起动过程结束时将 ATS 48 短路。允许每小时起动 10 次， 3 倍 In 电流最长持续 23 秒或相当的热循环，电机热保护必须符合 10 级要求。

ATS 48Q 系列 (230-415V) 与电机直接连接或连接到电机三角形绕组

ATS 48 连接在电机电源线中

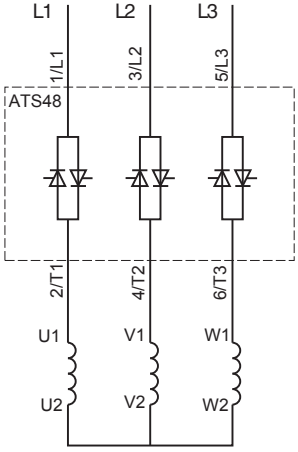

电机连接取决于电源电压，在本例中为星形连接。

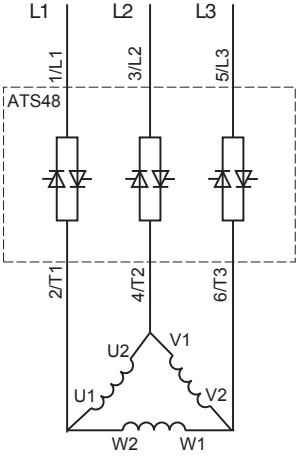

电机连接取决于电源电压，在本例中为三角形连接。

ATS 48 连接到电机三角形绕组，与每一绕组串联

ATS48●●●Q 或 ATS48●●●YS316 起动器可以串联接入电机三角形绕组中。它们由 1/√3 线电流的电流驱动，这样可以使用低额定值的起动器。

此选项可以在高级设定菜单 (Advanced settings menu) 中进行配置 (dLt=On)。
额定电流和限制电流设定值以及运行过程中显示的电流均为在线值，因此不需要由用户自己计算。

对于 ATS48 系列软起动器， ATS48●●●Q 或 ATS48●●●YS316 都可以串联连接在电机三角形绕组中。内三角连接时：
- 不能选择动态制动停机
- 不能使用级联功能
- 不能使用预热功能

关于起动器 - 电机组合的更多信息可参见第 12 页表格。

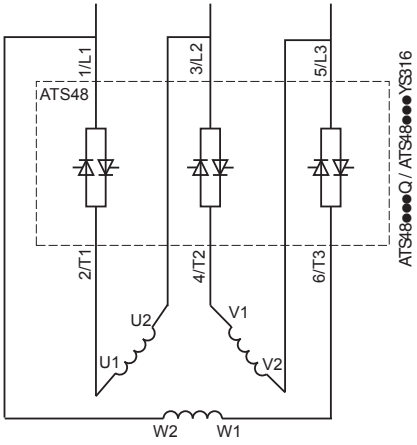

连接在电机三角形绕组中

例如：
1 台 400V-110kW 电机，线电流 195A (三角形连接的额定电流)。
每一绕组中的电流等于 195/1.7，即 114A。
选择最大允许额定电流稍大于此电流的额定值，即 140A 作为额定值 (ATS48C14Q 用于标准应用)。
为避免计算额定值，可以使用 14 和 15 页的表，表中给出对应于每种应用类型电机功率的起动器额定值。

中文

标准应用， **230V/415V** 电源，起动器直接连接

电机		起动器 230/415V (+10%-15%) -50/60Hz		
电机额定功率		10 级最大允许电流	ICL 额定值	起动器型号
230V	400V			
kW	**kW**	**A**	**A**	
4	7.5	17	17	ATS 48D17Q
5.5	11	22	22	ATS 48D22Q
7.5	15	32	32	ATS 48D32Q
9	18.5	38	38	ATS 48D38Q
11	22	47	47	ATS 48D47Q
15	30	62	62	ATS 48D62Q
18.5	37	75	75	ATS 48D75Q
22	45	88	88	ATS 48D88Q
30	55	110	110	ATS 48C11Q
37	75	140	140	ATS 48C14Q
45	90	170	170	ATS 48C17Q
55	110	210	210	ATS 48C21Q
75	132	250	250	ATS 48C25Q
90	160	320	320	ATS 48C32Q
110	220	410	410	ATS 48C41Q
132	250	480	480	ATS 48C48Q
160	315	590	590	ATS 48C59Q
(1)	355	660	660	ATS 48C66Q
220	400	790	790	ATS 48C79Q
250	500	1000	1000	ATS 48M10Q
355	630	1200	1200	ATS 48M12Q

电机额定电流 In 不能超过 10 级的最大允许电流。
(1) 没有对应的标准化电机时未给出功率值。

温度降容

上表中的值是根据最高环境温度 40°C 时的运行情况给出的。
ATS 48 最高可以在 60°C 环境温度下使用，在 40°C 以上每升高 1°C， 10 级最大允许电流降低 2% 即可。
例 : ATS 48D32Q 在 50°C 下运行 , 则应降容 10 × 2%=20% , 32A 变为 32 × 0.8=25.6A (最大电机额定电流)

重载应用， **230V/415V** 电源，起动器直接连接

电机		起动器 230/415V (+10%-15%) -50/60Hz		
电机额定功率 230V	400V	20 级中的最大允许电流	ICL 额定值	起动器型号
kW	**kW**	**A**	**A**	
3	5.5	12	17	ATS 48D17Q
4	7.5	17	22	ATS 48D22Q
5.5	11	22	32	ATS 48D32Q
7.5	15	32	38	ATS 48D38Q
9	18.5	38	47	ATS 48D47Q
11	22	47	62	ATS 48D62Q
15	30	62	75	ATS 48D75Q
18.5	37	75	88	ATS 48D88Q
22	45	88	110	ATS 48C11Q
30	55	110	140	ATS 48C14Q
37	75	140	170	ATS 48C17Q
45	90	170	210	ATS 48C21Q
55	110	210	250	ATS 48C25Q
75	132	250	320	ATS 48C32Q
90	160	320	410	ATS 48C41Q
110	220	410	480	ATS 48C48Q
132	250	480	590	ATS 48C59Q
160	315	590	660	ATS 48C66Q
(1)	355	660	790	ATS 48C79Q
220	400	790	1000	ATS 48M10Q
250	500	1000	1200	ATS 48M12Q

电机额定电流 In 不能超过 20 级的最大允许电流。
(1) 没有对应的标准化电机时未给出功率值。

温度降容

上表中的值是根据最高环境温度 40°C 时的运行情况给出的。
ATS 48 最高可以在 60°C 环境温度下使用， 40°C 以上每升高 1°C， 20 级最大允许电流降低 2% 即可。
例如 : ATS 48D32Q 在 50°C 下运行 , 则应降容 10 × 2%=20% , 22A 变为 22 × 0.8=17.6A (最大电机额定电流)

中文

标准应用， **230V/415V** 电源，起动器三角形连接

电机		起动器 230/415V (+10%-15%) -50/60Hz		
电机额定功率 230V	400V	10 级中的最大允许电流	ICL 额定值	起动器型号
kW	**kW**	**A**	**A**	
7.5	15	29	29	ATS 48D17Q
9	18.5	38	38	ATS 48D22Q
15	22	55	55	ATS 48D32Q
18.5	30	66	66	ATS 48D38Q
22	45	81	81	ATS 48D47Q
30	55	107	107	ATS 48D62Q
37	55	130	130	ATS 48D75Q
45	75	152	152	ATS 48D88Q
55	90	191	191	ATS 48C11Q
75	110	242	242	ATS 48C14Q
90	132	294	294	ATS 48C17Q
110	160	364	364	ATS 48C21Q
132	220	433	433	ATS 48C25Q
160	250	554	554	ATS 48C32Q
220	315	710	710	ATS 48C41Q
250	355	831	831	ATS 48C48Q
(1)	400	1022	1022	ATS 48C59Q
315	500	1143	1143	ATS 48C66Q
355	630	1368	1368	ATS 48C79Q
(1)	710	1732	1732	ATS 48M10Q
500	(1)	2078	2078	ATS 48M12Q

电机额定电流 In 不能超过 10 级的最大允许电流。
(1) 当没有对应的标准化电机时未给出功率值。

温度降容

上表中的值是根据最高环境温度 40°C 时的运行情况给出的。
ATS 48 最高可以在 60°C 环境温度下使用， 40°C 以上每升高 1°C， 10 级最大允许电流降低 2% 即可。
例如 : ATS 48D32Q 在 50°C 下运行 , 则应降容 10 × 2%=20% , 55A 变为 55 × 0.8=44A (最大电机额定电流)

重载应用， **230V/415V** 电源，起动器三角形连接

电机		起动器 230/415V (+10%-15%) -50/60Hz		
电机额定功率		20 级中的最大允许电流	ICL 额定值	起动器型号
230V	400V			
kW	**kW**	**A**	**A**	
5.5	11	22	29	ATS 48D17Q
7.5	15	29	38	ATS 48D22Q
9	18.5	38	55	ATS 48D32Q
15	22	55	66	ATS 48D38Q
18.5	30	66	81	ATS 48D47Q
22	45	81	107	ATS 48D62Q
30	55	107	130	ATS 48D75Q
37	55	130	152	ATS 48D88Q
45	75	152	191	ATS 48C11Q
55	90	191	242	ATS 48C14Q
75	110	242	294	ATS 48C17Q
90	132	294	364	ATS 48C21Q
110	160	364	433	ATS 48C25Q
132	220	433	554	ATS 48C32Q
160	250	554	710	ATS 48C41Q
220	315	710	831	ATS 48C48Q
250	355	831	1022	ATS 48C59Q
(1)	400	1022	1143	ATS 48C66Q
315	500	1143	1368	ATS 48C79Q
355	630	1368	1732	ATS 48M10Q
(1)	710	1732	2078	ATS 48M12Q

电机额定电流 In 不能超过 20 级的最大允许电流。
(1) 当没有对应的标准化电机时未给出功率值。

温度降容

上表中的值是根据最高环境温度 40°C 时的运行情况给出的。
ATS 48 最高可以在 60°C 环境温度下使用， 40°C 以上每升高 1°C， 20 级最大允许电流降低 2% 即可。
例如：ATS 48D32Q 在 50°C 下运行，则应降容 10 × 2%=20%，38A 变为 38 × 0.8=30.4A（最大电机额定电流）

中文

标准应用， **208V/690V** 电源，起动器直接连接

电机							起动器 208/690V (+10%-15%) -50/60Hz		
电机额定功率							10 级中的最大允许电流	ICL 额定值	起动器型号
208V	230V	440V	460V	500V	575V	690V			
HP	**HP**	**kW**	**HP**	**kW**	**HP**	**kW**	**A**	**A**	
3	5	7.5	10	9	15	15	17	17	ATS 48D17Y
5	7.5	11	15	11	20	18.5	22	22	ATS 48D22Y
7.5	10	15	20	18.5	25	22	32	32	ATS 48D32Y
10	(1)	18.5	25	22	30	30	38	38	ATS 48D38Y
(1)	15	22	30	30	40	37	47	47	ATS 48D47Y
15	20	30	40	37	50	45	62	62	ATS 48D62Y
20	25	37	50	45	60	55	75	75	ATS 48D75Y
25	30	45	60	55	75	75	88	88	ATS 48D88Y
30	40	55	75	75	100	90	110	110	ATS 48C11Y
40	50	75	100	90	125	110	140	140	ATS 48C14Y
50	60	90	125	110	150	160	170	170	ATS 48C17Y
60	75	110	150	132	200	200	210	210	ATS 48C21Y
75	100	132	200	160	250	250	250	250	ATS 48C25Y
100	125	160	250	220	300	315	320	320	ATS 48C32Y
125	150	220	300	250	350	400	410	410	ATS 48C41Y
150	(1)	250	350	315	400	500	480	480	ATS 48C48Y
(1)	200	355	400	400	500	560	590	590	ATS 48C59Y
200	250	400	500	(1)	600	630	660	660	ATS 48C66Y
250	300	500	600	500	800	710	790	790	ATS 48C79Y
350	350	630	800	630	1000	900	1000	1000	ATS 48M10Y
400	450	710	1000	800	1200	(1)	1200	1200	ATS 48M12Y

电机额定电流 In 不能超过 10 级的最大允许电流。
(1) 当没有对应的标准化电机时未给出功率值。

温度降容

上表中的值是根据最高环境温度 40°C 时的运行情况给出的。
ATS 48 最高可以在 60°C 环境温度下使用， 40°C 以上每升高 1°C， 10 级最大允许电流降低 2% 即可。
例如：ATS 48D32Y 在 50°C 下运行，则应降容 10 × 2%=20%，32A 变为 32 × 0.8=25.6A（最大电机额定电流）

重载应用，**208V/690V** 电源，起动器直接连接

电机							起动器 208/690V (+10%-15%) -50/60Hz		
电机额定功率							20 级中的最大允许电流	ICL 额定值	起动器型号
208V	230V	440V	460V	500V	575V	690V			
HP	**HP**	**kW**	**HP**	**kW**	**HP**	**kW**	**A**	**A**	
2	3	5.5	7.5	7.5	10	11	12	17	ATS 48D17Y
3	5	7.5	10	9	15	15	17	22	ATS 48D22Y
5	7.5	11	15	11	20	18.5	22	32	ATS 48D32Y
7.5	10	15	20	18.5	25	22	32	38	ATS 48D38Y
10	(1)	18.5	25	22	30	30	38	47	ATS 48D47Y
(1)	15	22	30	30	40	37	47	62	ATS 48D62Y
15	20	30	40	37	50	45	62	75	ATS 48D75Y
20	25	37	50	45	60	55	75	88	ATS 48D88Y
25	30	45	60	55	75	75	88	110	ATS 48C11Y
30	40	55	75	75	100	90	110	140	ATS 48C14Y
40	50	75	100	90	125	110	140	170	ATS 48C17Y
50	60	90	125	110	150	160	170	210	ATS 48C21Y
60	75	110	150	132	200	200	210	250	ATS 48C25Y
75	100	132	200	160	250	250	250	320	ATS 48C32Y
100	125	160	250	220	300	315	320	410	ATS 48C41Y
125	150	220	300	250	350	400	410	480	ATS 48C48Y
150	(1)	250	350	315	400	500	480	590	ATS 48C59Y
(1)	200	355	400	400	500	560	590	660	ATS 48C66Y
200	250	400	500	(1)	600	630	660	790	ATS 48C79Y
250	300	500	600	500	800	710	790	1000	ATS 48M10Y
350	350	630	800	630	1000	900	1000	1200	ATS 48M12Y

电机额定电流 In 不能超过 20 级的最大允许电流。
(1) 当没有对应的标准化电机时未给出值。

温度降容

上表中的值是根据最高环境温度 40°C 时的运行情况给出的。
ATS 48 最高可以在 60°C 环境温度下使用， 40°C 以上每升高 1°C， 20 级最大允许电流降低 2% 即可。
例如 : ATS 48D32Y 在 50°C 下运行 , 则应降容 10 × 2%=20% , 22A 变为 22 × 0.8=17.6A (最大电机额定电流)

中文

ATS 48D17 • ... C66 •

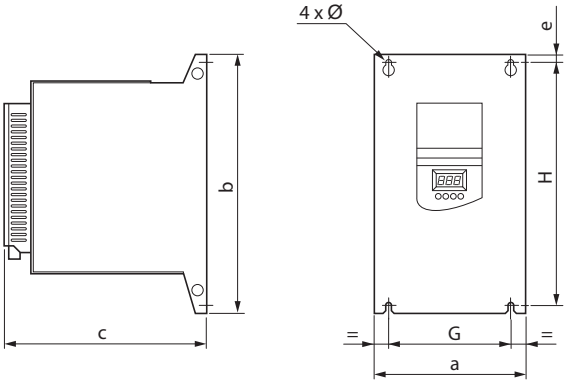

ATS 48	a mm	b mm	c mm	e mm	G mm	H mm	Ø mm	重量 kg
D17Q, D17Y D22Q, D22Y D32Q, D32Y D38Q, D38Y D47Q, D47Y	160	275	190	6.6	100	260	7	4.9
D62Q, D62Y D75Q, D75Y D88Q, D88Y C11Q, C11Y	190	290	235	10	150	270	7	8.3
C14Q, C14Y C17Q, C17Y	200	340	265	10	160	320	7	12.4
C21Q, C21Y C25Q, C25Y C32Q, C32Y	320	380	265	15	250	350	9	18.2
C41Q, C41Y C48Q, C48Y C59Q, C59Y C66Q, C66Y	400	670	300	20	300	610	9	51.4

ATS 48C79 • ... M12 •

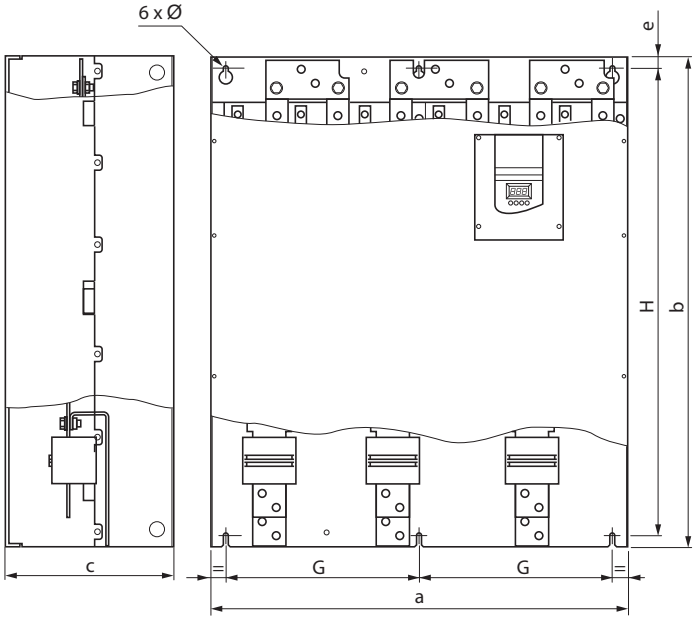

ATS 48	a mm	b mm	c mm	e mm	G mm	H mm	Ø mm	重量 kg
C79Q, C79Y M10Q, M10Y M12Q, M12Y	770	890	315	20	350	850	11	115

安装建议

垂直安装，倾斜角范围在 ±10° 以内。

不要靠近发热元件安装，特别是不要在发热元件上方安装。

应留出足够的空间以确保冷却空气能够从软起动器底部到顶部进行循环。

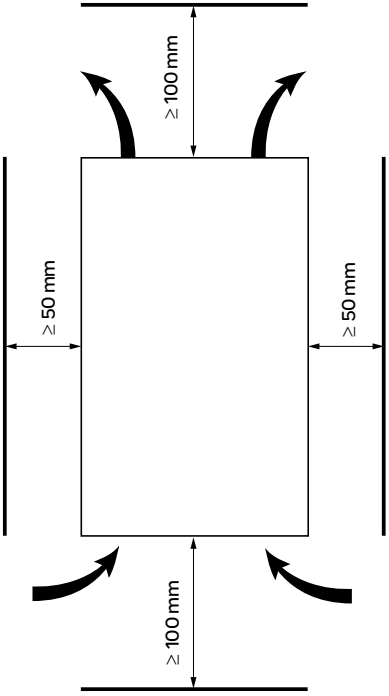

确认不会有液体、灰尘或导电物体落入起动器中 **(** 上方 **IP00** 防护等级 **)**

起动器通风

起动器上安装有一个冷却风扇，当散热器温度达到 50°C 时风扇即自动起动。温度降至 40°C 以下时风扇将停止工作。

风扇流量：

ATS 48 D32 • 和 D38 • : 14m^3/h
ATS 48 D47 • : 28m^3/h
ATS 48 D62 • 至 C11 • : 86m^3/h
ATS 48 C14 • 和 C17 • : 138m^3/h
ATS 48 C21 • 至 C32 • : 280m^3/h
ATS 48 C41 • 至 C66 • : 600m^3/h
ATS 48 C79 • 至 M12 • : 1,200m^3/h

壁挂式或落地式安装的壳体

壁挂式或落地式金属壳体，防护等级为 **IP 23**

应遵守上页的安装指导。

确保起动器通风充分：

- 安装通风格栅
- 检查通风是否充分。如不充分，安装一个带滤网的强迫通风装置。

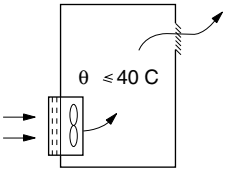

起动器耗散的功率，无旁路，额定电流时

起动器型号 ATS 48	功率 单位 W	起动器型号 ATS 48	功率 单位 W
D17Q, D17Y	59	C21Q, C21Y	580
D22Q, D22Y	74	C25Q, C25Y	695
D32Q, D32Y	104	C32Q, C32Y	902
D38Q, D38Y	116	C41Q, C41Y	1339
D47Q, D47Y	142	C48Q, C48Y	1386
D62Q, D62Y	201	C59Q, C59Y	1731
D75Q, D75Y	245	C66Q, C66Y	1958
D88Q, D88Y	290	C79Q, C79Y	2537
C11Q, C11Y	322	M10Q, M10Y	2865
C14Q, C14Y	391	M12Q, M12Y	3497
C17Q, C17Y	479		

注：起动器带旁路时其耗散功率极小（在 **15** 到 **30W** 之间）

- 控制回路功率损耗（所有额定值）：25W 无通风
- 控制耗电量（使用风扇通风）：

软启动	功耗 (W)	视在功率 (VA)
ATS 48D17● 至 C17●	30	80
ATS 48C21● 至 C32●	50	130
ATS 48C41● 至 M12●	80	240

中文

电源端子

端子	功能	最大接线能力 端子紧固力矩					
		ATS 48 D17 • D22 • D32 • D38 • D47 •	ATS 48 D62 • D75 • D88 • C11 •	ATS 48 C14 • C17 •	ATS 48 C21 • C25 • C32 •	ATS 48 C41 • C48 • C59 • C66 •	ATS 48 C79 • M10 • M12 •
⏚	地线接头 接地	10mm² 1.7 N.m	16mm² 3 N.m	120mm² 27 N.m	120mm² 27 N.m	240mm² 27 N.m	2x240mm² 27 N.m
		8 AWG 15 lb.in	4 AWG 26 lb.in	母线 238 lb.in	母线 238 lb.in	母线 238 lb.in	母线 238 lb.in
1/L1 3/L2 5/L3	电源	16mm² 3 N.m	50mm² 10 N.m	95mm² 34 N.m	240mm² 34 N.m	2x240mm² 57 N.m	4x240mm² 57 N.m
		8 AWG 26 lb.in	2/0 AWG 88 lb.in	2/0 AWG 300 lb.in	母线 300 lb.in	母线 500 lb.in	母线 500 lb.in
2/T1 4/T2 6/T3	至电机输出	16mm² 3 N.m	50mm² 10 N.m	95mm² 34 N.m	240mm² 34 N.m	2x240mm² 57 N.m	4x240mm² 57 N.m
		8 AWG 26 lb.in	2/0 AWG 88 lb.in	2/0 AWG 300 lb.in	母线 300 lb.in	母线 500 lb.in	母线 500 lb.in
A2 B2 C2	起动器旁路	16mm² 3 N.m	50mm² 10 N.m	95mm² 34 N.m	240mm² 34 N.m	2x240mm² 57 N.m	4x240mm² 57 N.m
		8 AWG 26 lb.in	2/0 AWG 88 lb.in	2/0 AWG 300 lb.in	母线 300 lb.in	母线 500 lb.in	母线 500 lb.in

电源端子布置图， **ATS 48D17 • 至 C11 •**

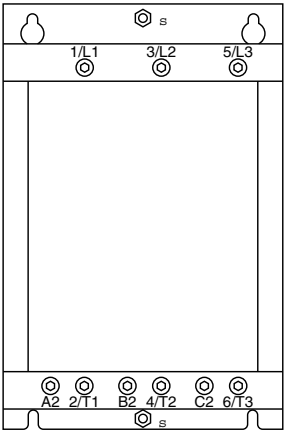

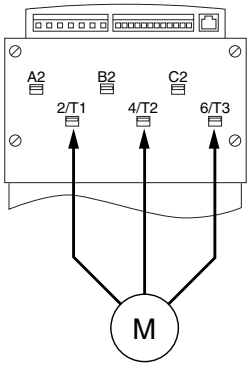

电机连接至 2/T1、 4/T2、 6/T3

电源端子布置图，**ATS 48C14 •** 和 **C17 •**

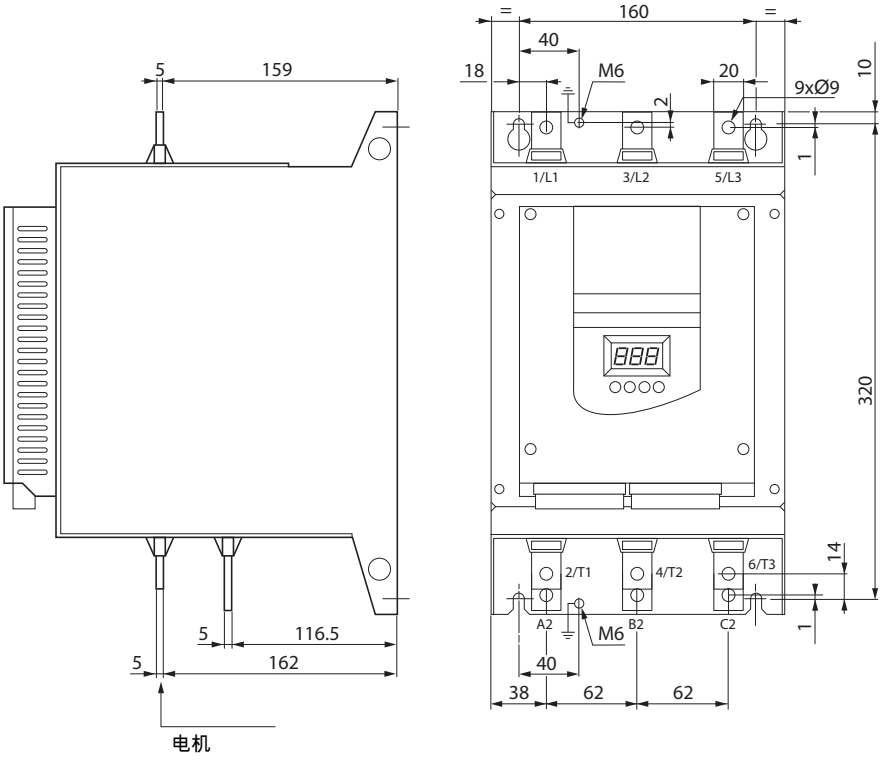

电源端子布置图， **ATS 48C21 •** 和 **C32 •**

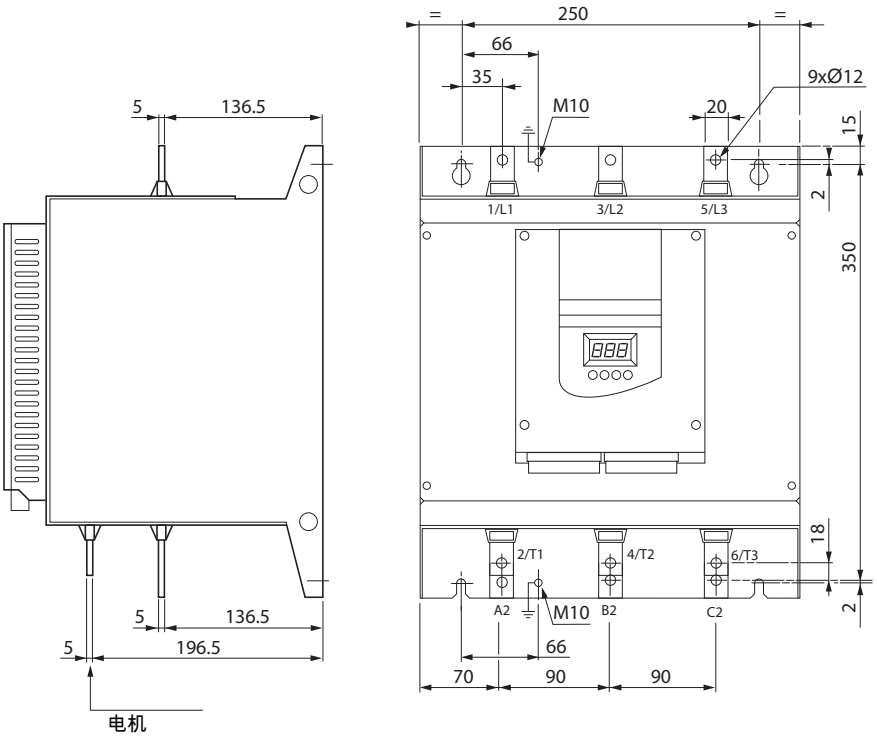

电源端子布置图， **ATS 48C41 • 和 C66 •**

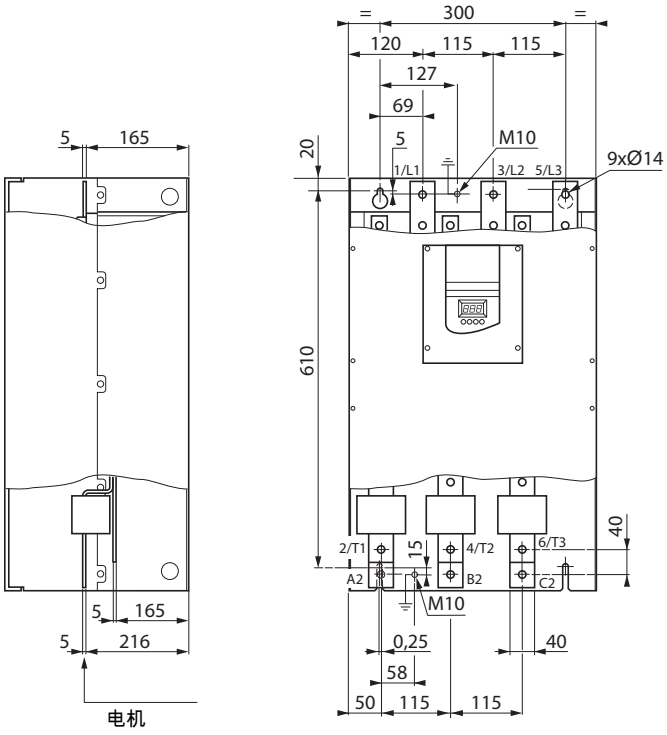

电源端子布置图， **ATS 48C79 •** 和 **M12 •**

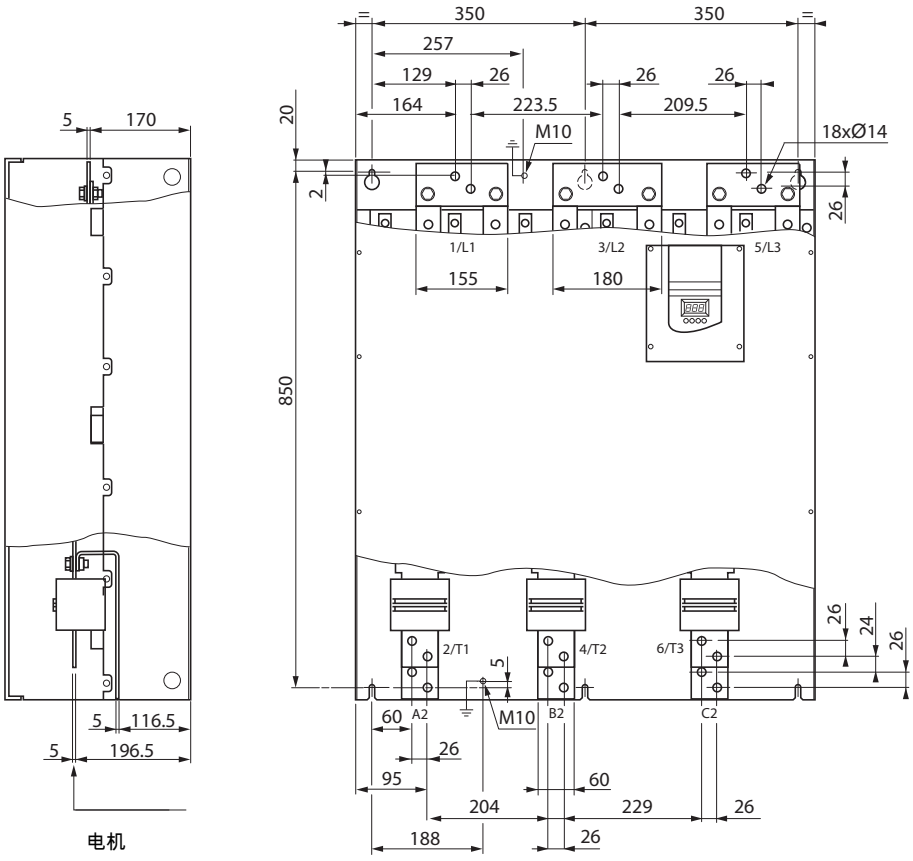

控制端子

控制端子使用单向插入式接头连接。

最大接线能力 : 2.5mm^2 (12 AWG)
最大紧固力矩 : 0.4N.m (3.5 lb.in)

要接近 ATS 48C17 • 至 M12 • 起动器的控制端子，必须将保护罩拆下。

电气特性

端子	功能	特性
CL1 CL2	ATS 控制电源	ATS 48•••Q: 220 至 415V + 10% - 15%, 50/60Hz ATS 48•••Y: 110 至 230V + 10% - 15%, 50/60Hz 能耗见 21 页
R1A R1C	可编程继电器 r1 的常开 (N/O) 触点	最小开关能力 • 直流 6V 时为 10mA 对感性负载的最大开关能力 (cos φ =0.5，L/R=20ms): • 对交流 230V 和直流 30V 为 1.8A 最大电压 400V
R2A R2C	起动结束继电器 r2 的常开 (N/O) 触点	
R3A R3C	可编程继电器 r3 的常开 (N/O) 触点	
STOP RUN LI3 LI4	起动器停机 (状态 0 为停机) 起动器运行 (如果 STOP 为 1，则状态 1 为运行) 可编程输入 可编程输入	4 x 24V 逻辑输入，阻抗为 4.3k? Umax = 30V, Imax = 8mA 状态 1: U > 11V - I > 5mA 状态 0: U < 5V - I < 2mA
24V	电源逻辑输入	+24V ±25% 隔离并保护以防短路和过载， 最大电流 : 200mA
LO+	电源逻辑输出	连接至 24V 或外部电源
LO1 LO2	可编程逻辑输出	2 个集电极开路输出端，与 1 级 PLC 兼容，符合 IEC 65A-68 标准。 • 电源 +24V (最低 12V，最高 30V) • 带有外接电源的每个输出端最大电流 200mA
AO1	可编程模拟输出	输出可配置为 0-20mA 或 4-20mA • 精度为最大值的 ±5%，最大阻抗 500Ω
COM	I/O 公共端	0V
PTC1 PTC2	PTC 传感器输入	25°C 时传感器回路的总电阻为 750Ω (例如， 3 x 250Ω 传感器串联)
(RJ 45)	接头用于 • 远程操作盘 • PowerSuite • 通讯总线	RS 485 Modbus

控制端子布置图

(RJ 45)

接线指导

电源接线

按照标准中推荐的电缆截面积选用电缆。

起动器必须接地以符合有关漏电流的规范。当安装标准要求使用进线 “残余电流设备” 用于保护时，必须使用一个 A-Si 类型设备 (避免上电过程中出现意外脱扣)。检查它与其他保护设备的兼容性。如果安装中有若干起动器连接在同一条线上的情况，则每个起动器必须单独接地。如有必要，应安装一个进线电抗器 (参见产品目录)。

动力电缆应与弱电信号 (检测器、 PLC、测量仪表、视频、电话) 电路保持隔离。

控制接线

控制线与动力电缆应保持隔离。

RUN (运行) 和 STOP (停机) 逻辑输入端的功能 (见 30 页应用接线图)

2 线控制

运行和停机是由状态 1 (运行) 和 0 (停机) 进行控制， RUN 和 STOP 输入状态同时考虑。

在上电或故障手动复位时如果有 RUN 命令则电机会重新起动。

3 线控制

运行和停机由 2 个不同的逻辑输入端控制。

断开 (状态 0) STOP 输入可获得停机。

在 RUN 输入端的脉冲一直存储到停机输入断开为止。

在上电或故障手动复位时或在一个停机命令之后，电机只能在 RUN 输入端已断开 (状态 0) 之后跟着一个新脉冲 (状态 1) 时才能上电。

ATS 48: 不可逆，带有进线接触器，自由停车，协调 **1** 型

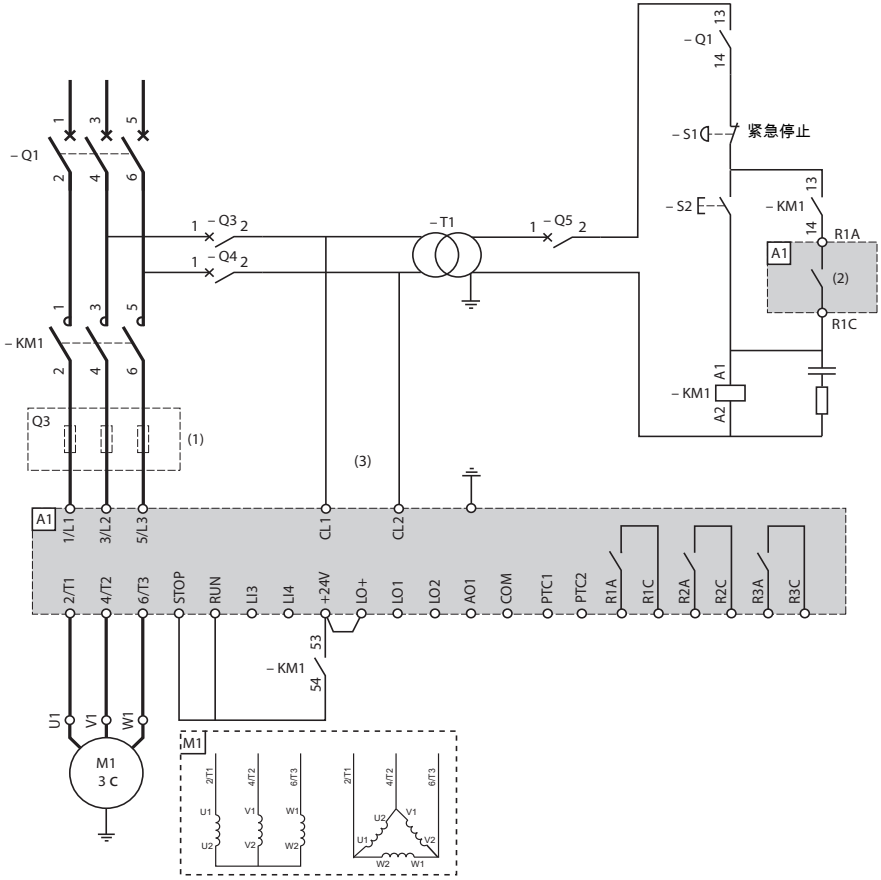

(1) 安装用于协调 2 型的快速熔断器 (符合 IEC 60 947-4-2 标准)

(2) 继电器 R1 定义 : 隔离继电器 (rIl)。见 27 页 “电气特性”。要了解触点的容量限制，例如当与高额定值接触器连接时。

(3) 如果电源电压与 ATS 48 所允许的控制电压不同，则应添加一个变压器。见 27 页 “电气特性”。

中文

ATS 48: 不可逆，带有进线接触器，旁路，自由停车或可控停车，协调 **1** 型

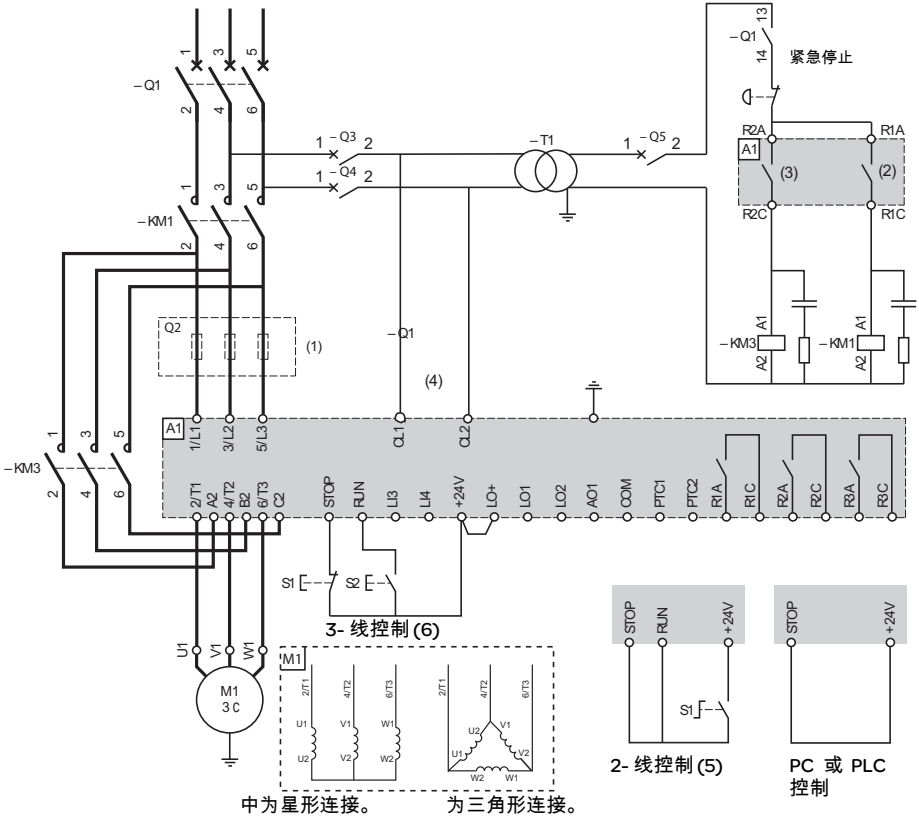

(1) 安装用于协调 2 型的快速熔断器 (符合 IEC 60 947-4-2 标准)
(2) 继电器 R1 定义 : 隔离继电器 (rIl)。要了解触点的容量限制，例如当与高额定值接触器连接时。见 27 页 “电气特性”。
(3) 要了解触点的容量限制，例如当与高额定值接触器连接时。见 27 页 “电气特性”。
(4) 如果电源电压与 ATS 48 控制所允许的电压不同，则应添加一个变压器。见 27 页 “电气特性”。
(5) 见 28 页 “2- 线控制”。
(6) 见 28 页 “3- 线控制”。

ATS 48: 不可逆，自由停车或可控停车，协调 **1** 型，带有进线接触器，旁路，连接至电机中的三角形绕组，适用于 **ATS48•••Q** 或 **ATS48•••YS316**

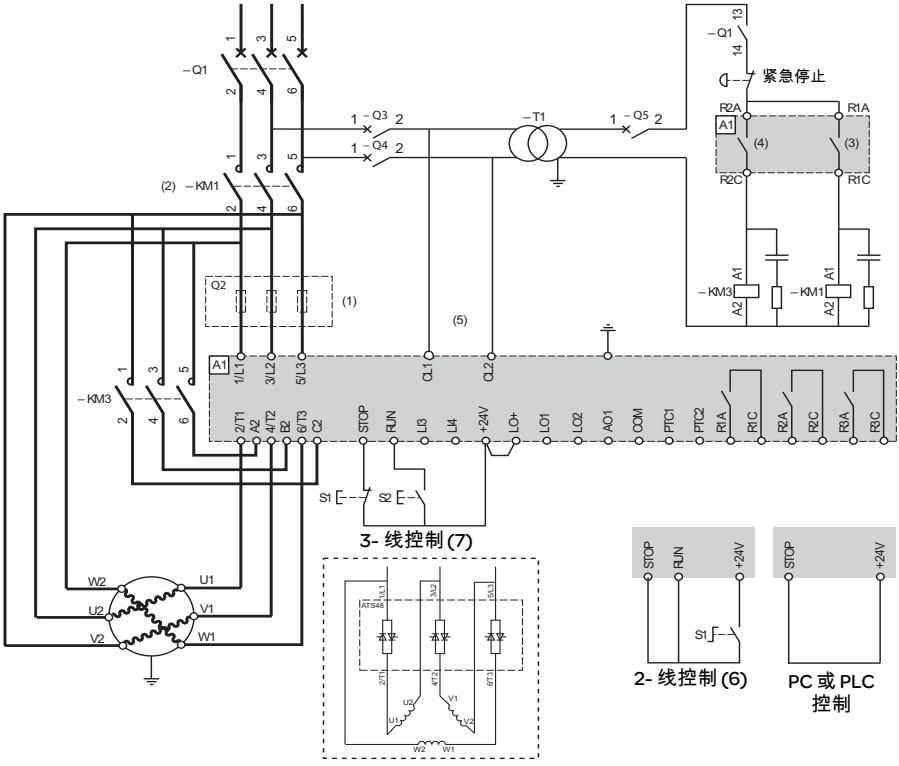

注意：调整 *dIt* 给 *on*（见 “高级设定菜单 **(drC)**”, 468 页）

(1) 安装用于协调 2 型的快速熔断器 (符合 IEC 60 947-4-2 标准)

(2) 必须使用 KM1，需要添加外部微分热保护装置。

(3) 继电器 R1 定义：隔离继电器 (rIl)。要了解触点的容量限制，例如当与高额定值接触器连接时。见 27 页 “电气特性”。

(4) 要了解触点的容量限制，例如当与高额定值接触器连接时。见 27 页 “电气特性”。

(5) 如果电源电压与 ATS 48 控制所允许的电压不同，则应添加一个变压器。见 27 页 “电气特性”。

(6) 见 28 页 “2- 线控制”。

(7) 见 28 页 “3- 线控制”。

如果使用了旁路接触器，则 “PHF” 故障检测仍然有效。

ATS 48: 不可逆，自由停车或可控停车，协调 **1** 型，带有进线接触器，电机旁路， **LSP/HSP** 有两组参数

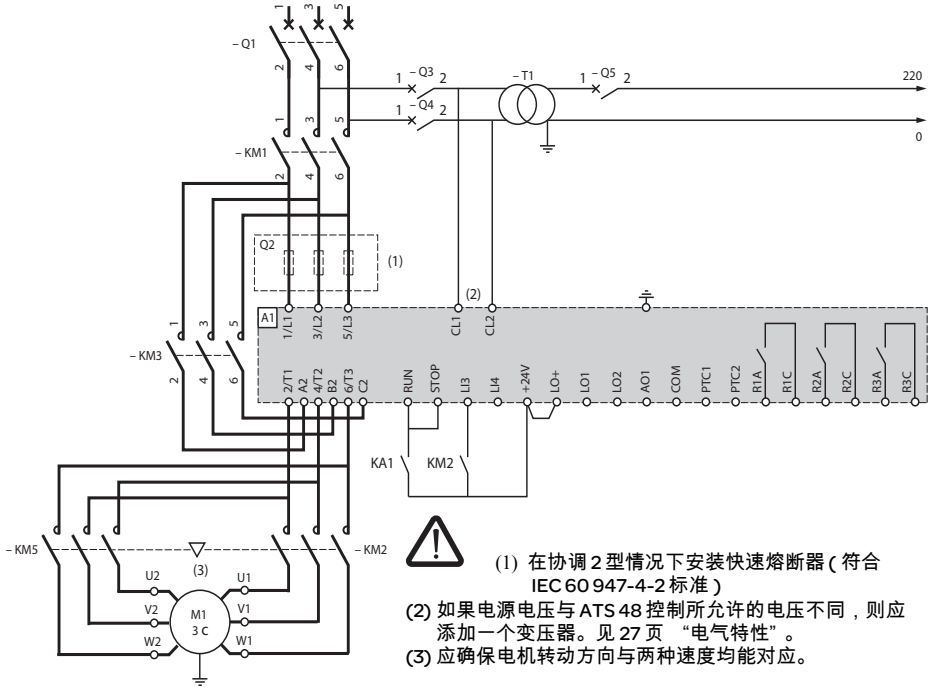

(1) 在协调 2 型情况下安装快速熔断器 (符合 IEC 60 947-4-2 标准)

(2) 如果电源电压与 ATS 48 控制所允许的电压不同，则应添加一个变压器。见 27 页 “电气特性”。

(3) 应确保电机转动方向与两种速度均能对应。

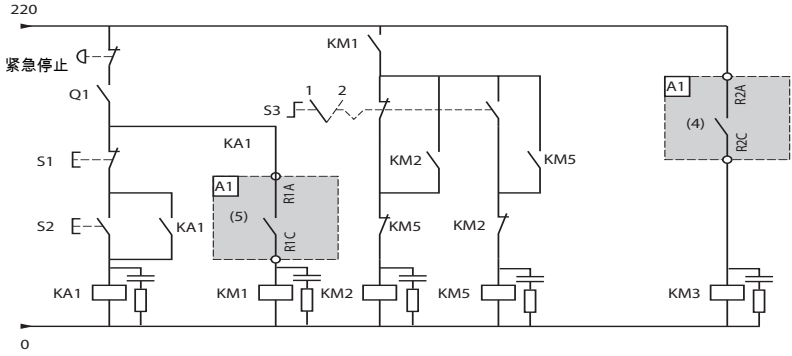

(4) 要了解触点的工作限制，例如当与高额定值接触器连接时。见 27 页 “电气特性”。

(5) 继电器 R1 定义 : 隔离继电器 (rII)。要了解触点的容量限制，例如当与高额定值接触器连接时。见 27 页 “电气特性”。

LI3=LIS (第 2 组电机参数)

S3: 1=LSP， 2=HSP

ATS 48: 不可逆，带有进线接触器，用单个 **ATS** 对级联的多个电机进行起动或减速

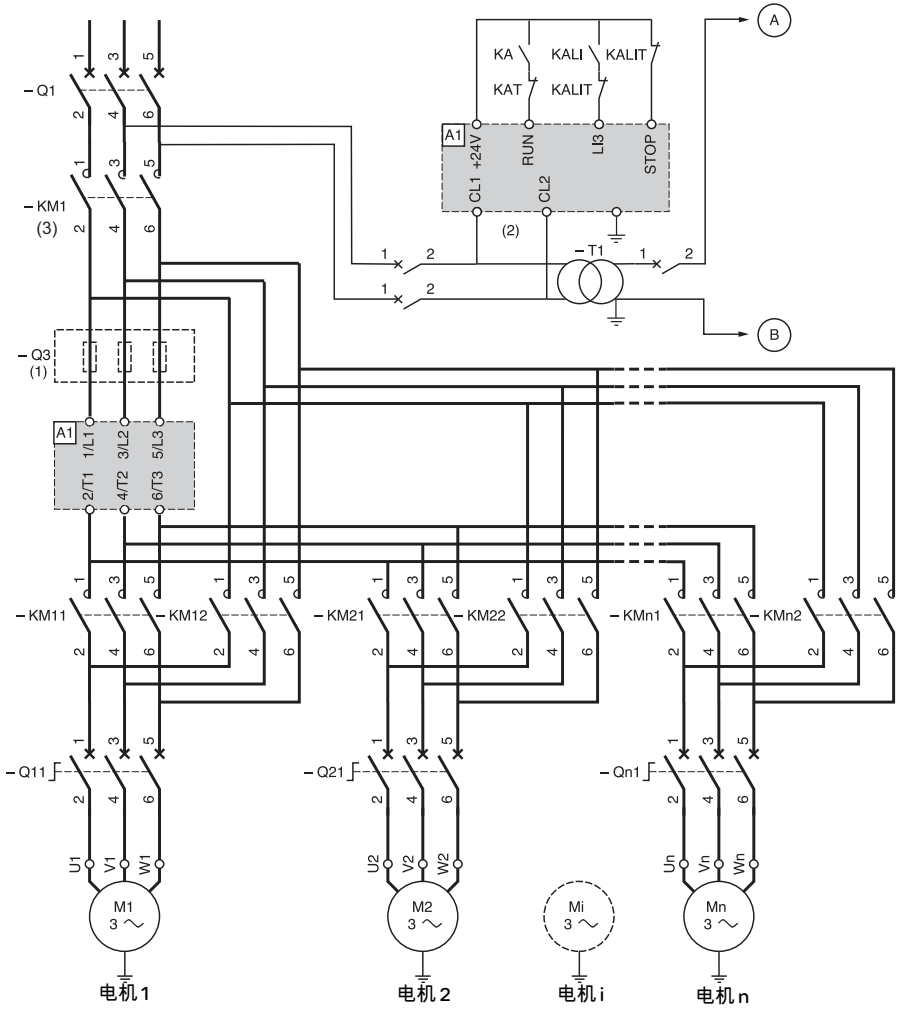

(1) 协调 2 型情况下熔断器安装 (符合 IEC 60 947-4-2 标准)
(2) 如果电源电压与 ATS 48 控制所允许的电压不同，则应添加一个变压器。见 27 页 “电气特性”。
(3) KM1: 必须与所有电机总和的功率相匹配。

注 :
- 在 ATS48 上必须配置一个 “级联” 逻辑输入 (LI3=LIC)。见 58 页 “级联功能激活”。
- 在出现故障时将不能够对当时正在运行的任何电机进行减速或制动。
- 根据电机额定电流调整每个断路器 QN1 的热保护。

中文

ATS48: 不可逆，带有进线接触器，用单个ATS对级联的多个电机进行起动或减速

电机1控制

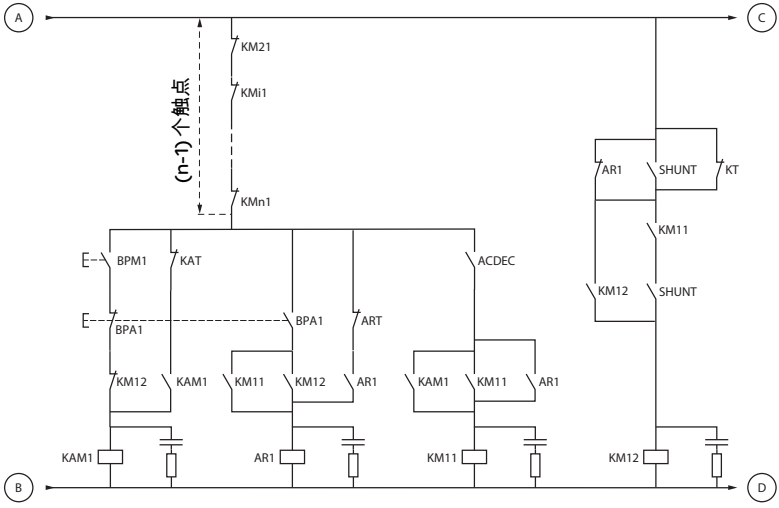

电机2控制

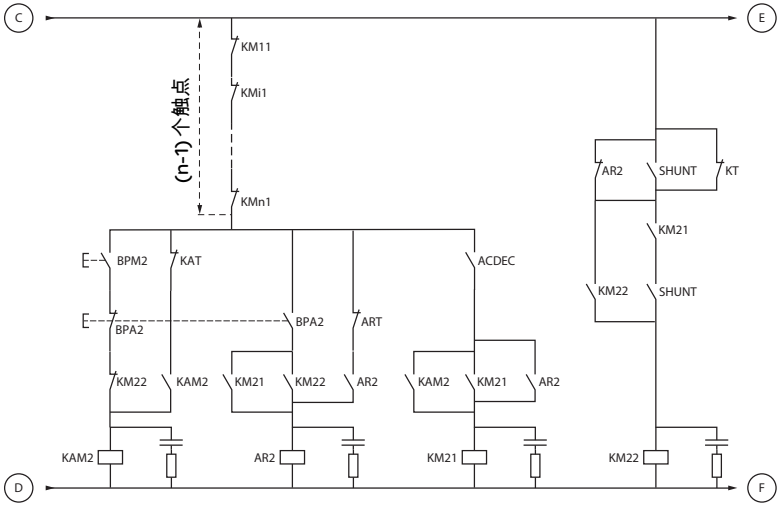

BPM1: 电机1“起动” 按钮
BPM2: 电机2“起动” 按钮

BPA1: 电机1 “停止” 按钮
BPA2: 电机2 “停止” 按钮

中文

应用接线图

ATS 48: 不可逆，带有进线接触器，用单个 **ATS** 对级联的多个电机进行起动或减速

电机 **n** 控制

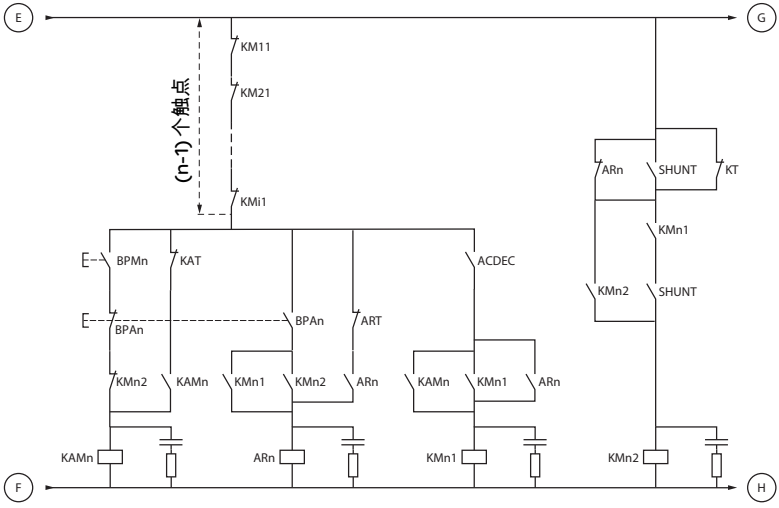

级联控制

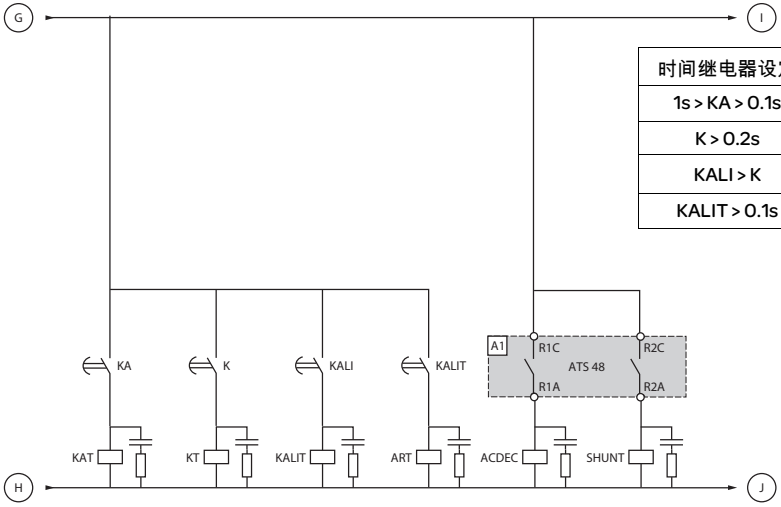

时间继电器设定
1s > KA > 0.1s
K > 0.2s
KALI > K
KALIT > 0.1s

BPMn: 电机 n 的 “起动” 按钮
BPAn: 电机 n 的 “停止” 按钮

R1 必须配置为隔离继电器 (r1=rII)

连续 **2** 个停机命令需等待时间继电器 **KALIT** 延时的结束。

中文

ATS 48: 不可逆，带有进线接触器，用单个 **ATS** 对级联的多个电机进行起动或减速级联控制

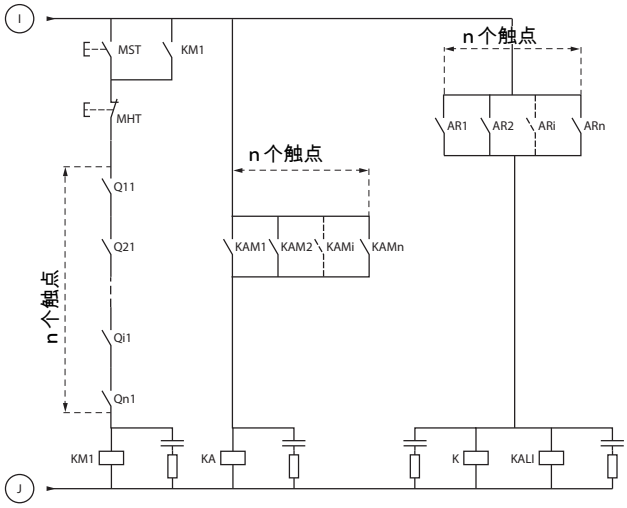

MST: 总 “起动” 按钮
MHT: 总 “停止” 按钮

ATS 48: 不可逆，带有进线接触器，用单个 **ATS** 对级联的多个电机进行起动或减速

完整操作顺序说明

按下 **MST** 起动按钮， **KM1** 线圈得电 **(** 进线接触器 **)**，主触头闭合

1 - 2 - 3

按 BPM1 起动电机 1。按 BPM2 起动电机 2，按 BPMn 起动电机 n。
当按下 BPM1 时， KAM1 得电，如 KM11 一样，因为 ACDEC 被激活 (ATS48 由 MST 和 KM1 供电)。
因为 KAM1 闭合， KA 得电。在一段可调的延时后 KAT 也会得电。

4 - 5

ATS48 在有 KA 和 KAT 吸合后， RUN 端子施加运行命令后将会起动电机。

KAM1 由于 KAT 常闭触点打开失电。

KM11 保持闭合。

6 - 7

在起动结束时， R2 在 ATS48 得电， SHUNT 闭合， KM12 被 SHUNT 闭合，而 KM11 保持闭合。

8 - 9

在较短的一段时间之后， R2 在 R1 之后失电 (起动器旁路功能)。

由于 ACDEC 断开， KM11 断开。

电机继续由 KM12 供电。

ATS48 显示一个状态代码。

用同样的步骤起动下一个电机。起动电机 **n** 按下 **BPMn**，按下 **BPAn** 让电机 **n** 停机。各个电机可以以任何顺序起动和停止。

要使电机 **1** 停机，按 **BPA1**， **AR1** 闭合

a - b - c - d

K 和 KALI 闭合。
ATS48 上的 LI 从 KALI 和 KALIT 上接收一个命令 (LI 必须调整至 LIC 值)。
ATS48 上 R1 和 R2 得电动作 (R2 为脉冲信号， R1 保持闭合直到电机完全停下来)。

e

KM11 闭合。

在一段可调的时延之后， KT 和 KALIT 得电。

f

ATS48 从 KALIT 接受一个停机指令。

g

KM12 失电。

ATS48 使电机减速。

h

当电机完全停下来后 ATS48 上 R1 断开。

i

KM11 断开。

ATS48 可以对其他电机进行起动或停机。

ATS 48: 不可逆，带有进线接触器，用单个 **ATS** 对级联的多个电机进行起动或减速动作时序图

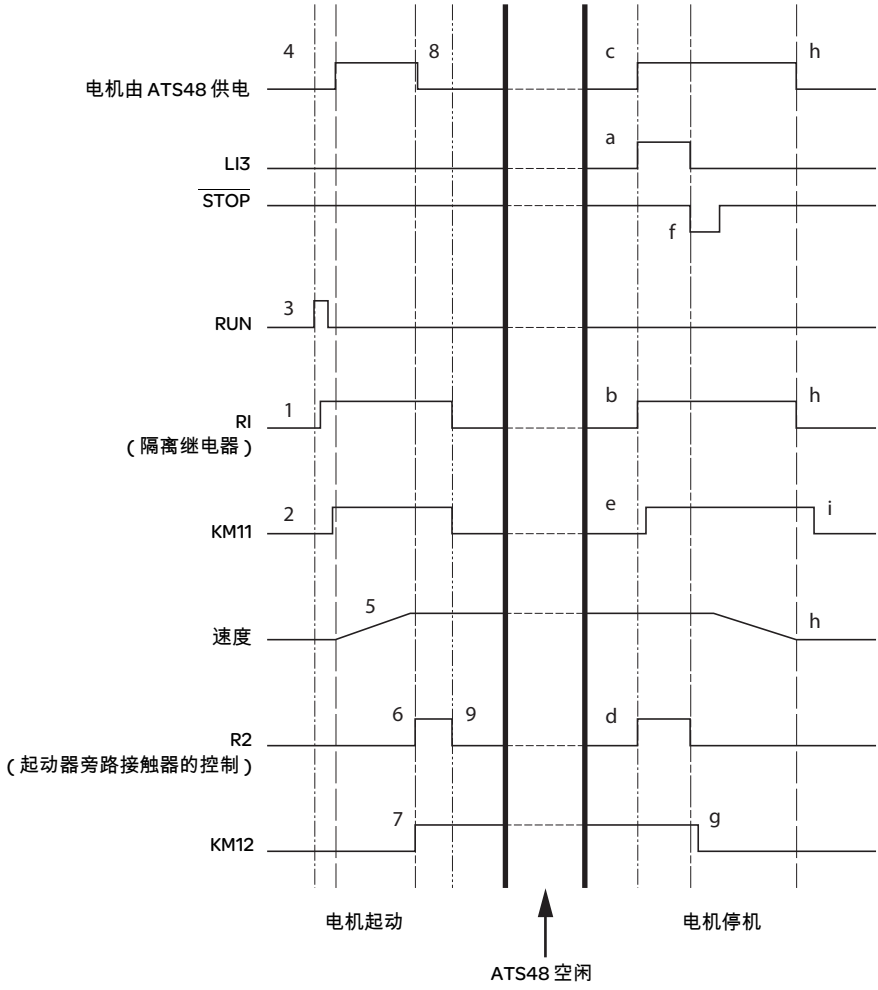

起动器热保护

通过安装在散热器上的 PTC 传感器和计算晶闸管的温升提供热保护。

电机热保护

起动器会根据受控制的额定电流 In 和实际吸收的电流持续地计算电机的温升。

温升可能由长时间或短时间的欠载或过载引起。下面几页上的脱扣曲线是基于起动电流 Is 和电机电流 In (可调整的) 做出的。

IEC60947-4-2 标准定义了保护等级，它给出了电机的无热故障起动能力 (热起动或冷起动)。对 COLD (冷) 状态 (对应于稳定的电机热状态，断电) 和 WARM (热) 状态 (对应于一个稳定的电机热状态，在额定功率下) 给出了不同的保护等级。

起动器出厂设置为 10 级保护。
可以使用 PrO 菜单修改保护等级。

起动器显示的热保护对应于加热时间常数 (iron time constant)。
- 如果电机超过了其额定温升阈值 (电机热状态 =110%) 则激活过载报警。
- 如果超过了临界温升阈值 (电机热状态 =125%) 热故障将使电机停机。

在出现起动延长时，即使显示的值低于脱扣值起动器也能由故障或热报警脱扣。

如果没有禁止热保护，则热故障可以由继电器 R1 指示。

在电机已经停机或起动器已被断电后，即使控制电路断电也仍然会计算热状态。ATS 热控制系统可以防止在电机温升过高的情况下重新起动电机。

如果使用特殊的电机 (防火、水下的等等)，则应由 PTC 传感器提供热保护。

电机热保护

冷态曲线

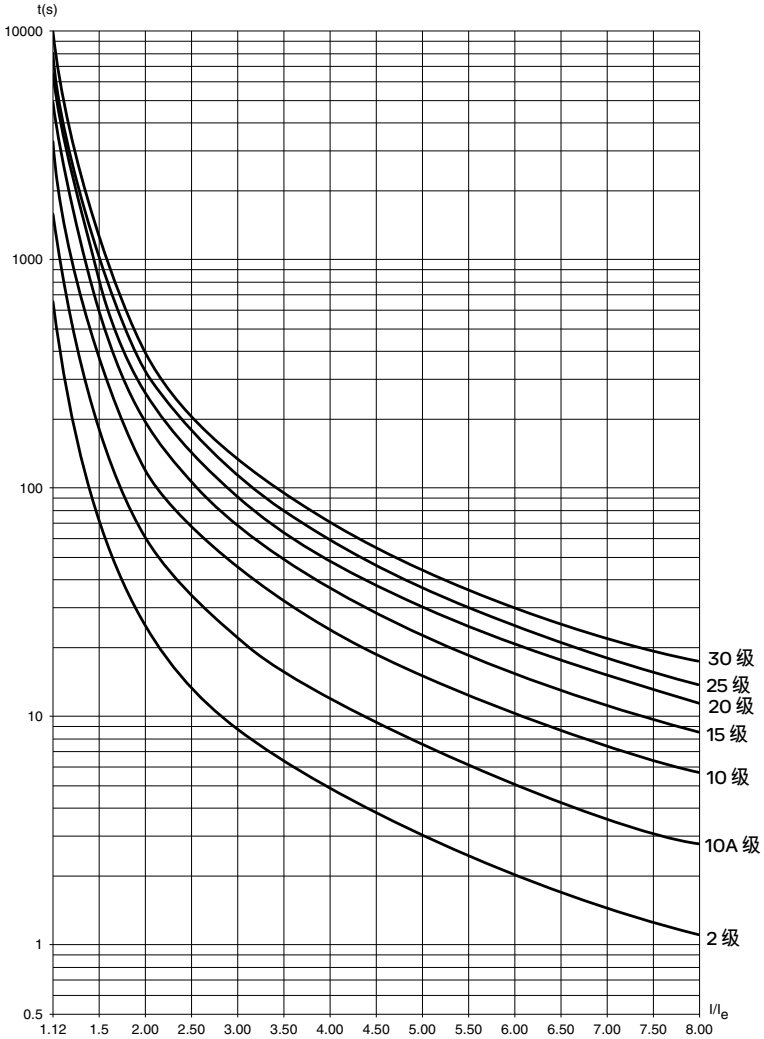

标准应用 (10 级) 的脱扣时间		重载应用 (20 级) 的脱扣时间	
3In	5In	3.5In	5In
46s	15s	63s	29s

电机热保护

热态曲线

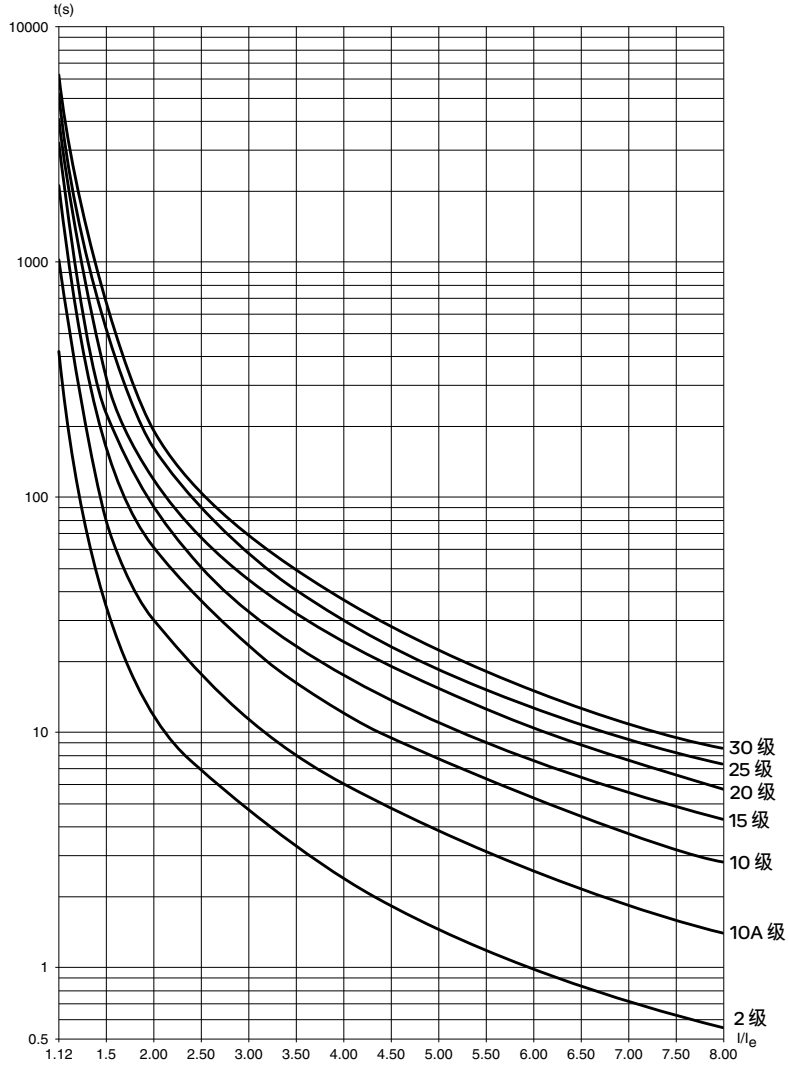

标准应用 (10 级) 的脱扣时间		重载应用 (20 级) 的脱扣时间	
3In	5In	3.5In	5In
23s	7.5s	32s	15s

中文

使用 PTC 传感器的电机热保护

集成在电机中用以测量其温度的 PTC 传感器可以连接到控制卡端口上，这个模拟值由起动器进行管理。

“PTC probe thermal overshoot” (PTC 传感器热过冲) 参数值可通过两种方式进行处理和使用 :
- 如果该信号有效，出现故障时停机
- 如果该信号有效，给出报警。该报警可以显示在起动器状态字 (串口) 中或可配置逻辑输出

注意 :
PTC 传感器保护不会禁止通过计算给出的电机热保护。两种类型的保护可以并行工作。

按键及显示屏的功能

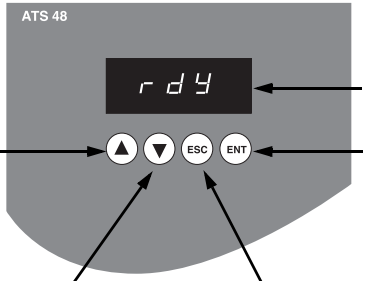

- 3位7段显示屏
- 返回前一菜单或参数，或增加显示值
- 输入菜单或参数，或者保存显示参数或值
- 显示下一菜单或参数，或减少显示值
- 退出菜单或参数，或放弃显示的值返回内存中的先前值

按 ▲ 或 ▼ 不会存储所作的选择。

存储，保存显示的选项：ENT

存储某一值时显示屏将会闪烁。

显示规则

根据参数的最大范围及其值，数字的显示原则有所不同。

- 最大范围 9990:
  - 0.1 至 99.9 的值 (如 : 05.5 = 5.5; 55.0 = 55; 55.5 = 55.5)
  - 100 至 999 的值 (如 : 555 = 555)
  - 1000 至 9990 的值 (如 : 5.55 = 5550)
- 最大范围 99900:
  - 1 至 999 的值 (如 : 005 = 5; 055 = 55; 550 = 550)
  - 1000 至 9990 的值 (如 : 5.55 = 5550)
  - 10000 至 99900 的值 (如 : 55.5 = 55500)

访问菜单

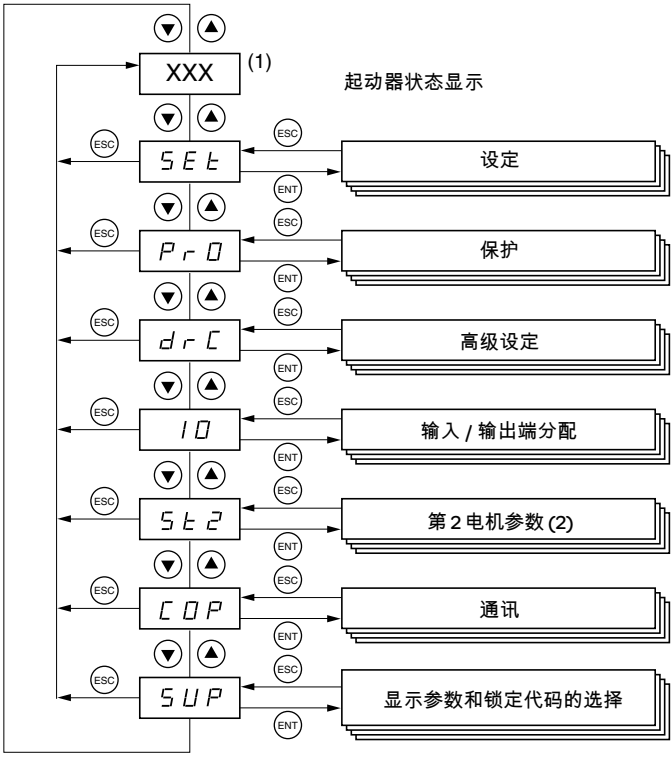

(1) 对显示值 “XXX” 的处理在下页表中给出。
(2) 菜单 St2 仅当配置了 “second set of motor parameters”（第 2 组电机参数）功能时才可见。

访问参数

存储，保存显示的选项：(ENT)
存储某一值时显示屏将会闪烁。

例：

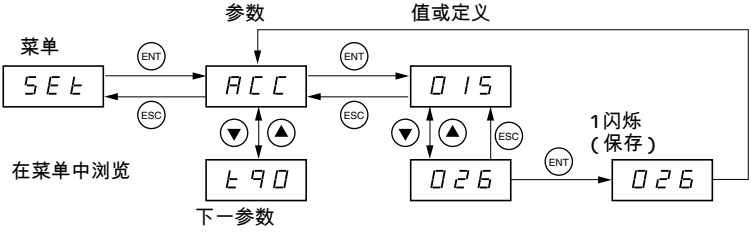

起动器状态显示

显示器 “XXX” 遵循以下规则 :

显示值	状态
故障代码	起动器故障
nLP rdY	起动器没有运行命令且 : • 未通电 • 通电
tbS	未经过起动延时
HEA	电机正在加热
用户选择的检测参数 (SUP 菜单)。出厂设定 : 电机电流	起动器有运行命令
brL	起动器制动
Stb	在级联模式下等待命令 (RUN 或 STOP)

当电流限制用于起动器时，显示的值 “XXX” 将闪烁。

即使起动器上出现故障时仍然可以对参数进行修改。

远程操作盘选件

VW3 G48101 远程操作盘可以安装在壁挂式或落地式安装的封装门上，带有密封条能够提供 IP 65 防护。它有一条 3m 长的带接头的电缆，通过起动器上的 RJ45/Modbus 接口进行通讯 **(** 见端子附带的手册 **)**. 它具有与 ATS 48 相同的显示屏和编程按钮，另外还添加了一个菜单访问锁定开关。

前面板视图 :

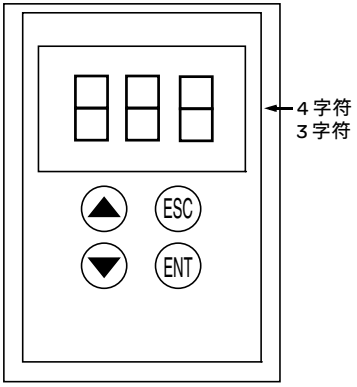

后面板视图 :

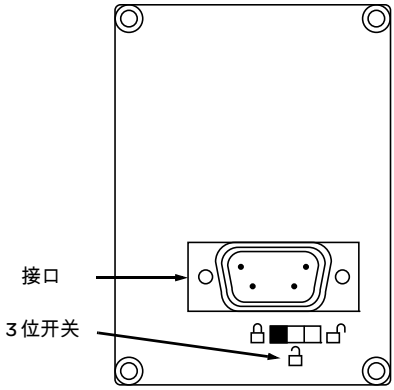

远程操作盘开关的控制

操作盘上的 3 位置开关应按如下原则使用 :

- 锁定位置 🔒 : 只有检测参数可以访问。当起动器正在运行时，不能选择显示不同的参数。
- 部分锁定位置 🔒 : 对 SEt, PrO 和 SUP 菜单参数进行有限的访问。
- 解锁位置 🔓 : 所有参数均可访问。

任何有远程操作盘开关施加给起动器的显示限制在起动器已断开连接甚至以关机后仍然起作用。

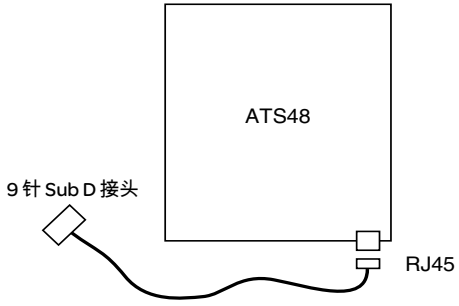

设定菜单 (Set)

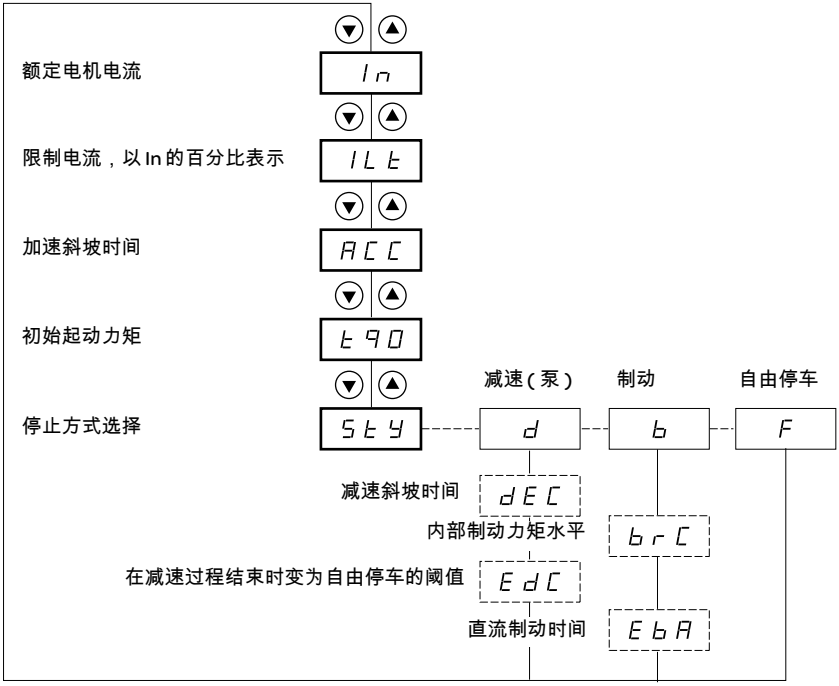

菜单中的参数

可选择

根据选择的参数出现

要访问参数，参见 44 页。

中文

设定菜单 (Set)

这些设定参数只能在电机停机后进行修改。

代码	说明	设定范围	出厂设定
In	电机额定电流	0.4 至 1.3ICL	(1)
	调整铭牌上指示的电机额定电流值，即使起动器已与电机按三角形接法连接 (PrO 菜单中的 dLt)。 确认该电流在 0.4 到 1.3ICL 之间 (ICL: 起动器额定值)。		
ILt	限制电流	In 的 150 至 700%，限定在 ICL 的 500%	In 的 400%
	限制电流 ILt 以 ICL 的百分比表示。 在最大负载条件下，应当以足够高的值设置 ILt，以允许电机起动。 如果应用需要 500% 以上的 Icl，则起动器一定过大。 限制在 ICL (起动器额定值，见 12 页 “起动器 - 电机组合”) 的 500% 以内。 限制电流 =ILt × In。 例 1: In=22A， ILt=300%，则限制电流 =300% × 22A=66A 例 2: ATS 48C21Q，其 ICL=210A In=195A， ILt=700%，限制电流 =700% × 195=1365， 最高限制为 500% × 210=1050A		
ACC	加速斜坡时间	1 至 60s	15s
	下图为起动器力矩在 0 到额定力矩 Tn 之间的上升时间，即加速过程中力矩斜坡的梯度。 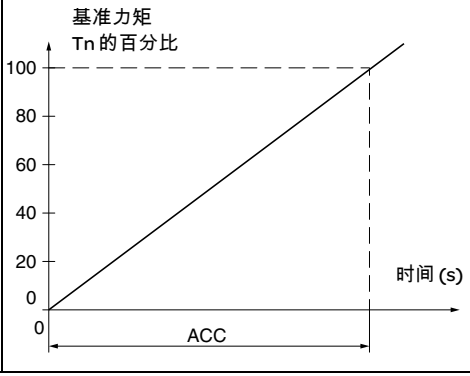 		

(1) In 的出厂设定对应于一个带 10 级保护的 4 极 400V 标准化电机的通常值 (对于 ATS 48•••Q)。
In 的出厂设定对应于一个符合 NEC 标准、带 10 级保护的 4 极 460V 标准化电机的通常值 (对于 ATS 48•••Y)。

代码	说明	设定范围	出厂设定
tq0	初始起动力矩	Tn 的 0 至 100%	20%
	起动过程中的初始力矩设定，在额定力矩的 0 到 100% 之间变动 。 应当设置初始起动扭矩，从而在对电机施加命令时使得电机转动 。 如果设置过低，则电机将会在 “运行” 信号发出后转动。 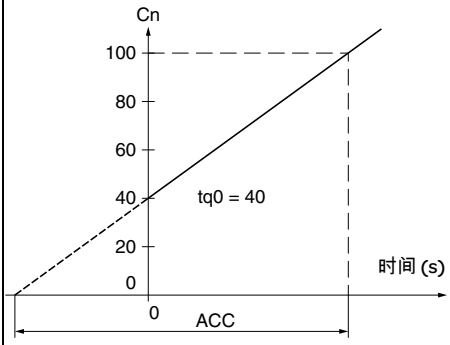 		
StY	停机类型选择	d-b-F	-F-
	可以使用 3 种类型的停机方式 : **- d -**: 通过控制力矩的软停机。起动器对电机施加一个力矩以使其按斜坡逐渐减速，避免快速停止。这类停止方式能够降低水锤效应的作用。 **- b -**: 动态制动停机 : 如果存在相当大的惯性，则起动器在电机中产生一个制动力矩，以此使电机减速。 **- F -**: 自由停车 : 起动器不向电机施加力矩。 注意：如果软起动器采用电机内三角接法，不允许选择停止类型 “b” (动态制动停机)。		

代码	说明	设定范围	出厂设定
dEC	减速斜坡时间	1 至 60s	15s
	此参数只在 StY=-d- 才能被访问。 可用于设定一段 1 至 60s 的时间，以便从估算的力矩转换为零力矩 (= 当使用 -d- 类停机时，减速过程中力矩斜坡的梯度) 它通过改变力矩基准的梯度改变了减速过程，避免了泵应用中的液体冲击。 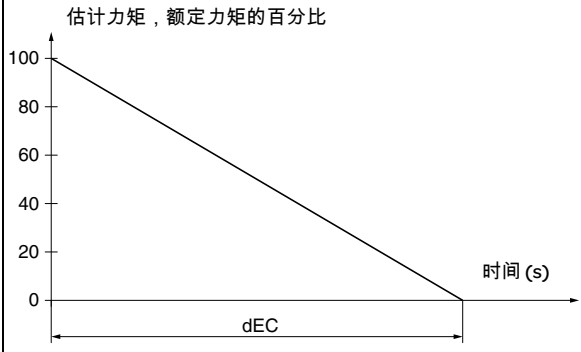 		
EdC	在减速过程末变为自由停车模式的阈值	0 至 100%	20%
	此参数只在 StY=-d- 且高级设定菜单 (drC) 中的 CLP 参数仍设置为出厂设定 (On) 时才能被访问。 可用于在减速过程开始时估算力矩的 0 到 100% 之间设定最终的力矩水平。 在泵的应用中，减速控制不一定低于由 Edc 设置的负载水平。 如果在减速开始时估算的力矩低于 20，即额定力矩的 20%，则不会激活受控减速，电机将会转为自由停车模式。 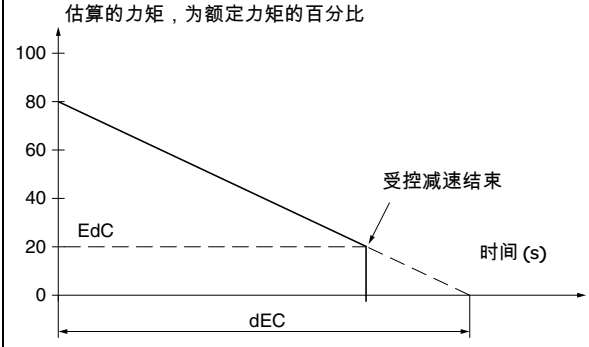 		

代码	说明	设定范围	出厂设定
brC	内部制动力矩水平	0 至 100%	50%
	此参数只在 StY=-b- 时才能被访问。 对于 -b- 类停机，用于调整制动强度。 制动在额定速度的 20% 以下有效。通过调整电机中直流电流的注入时间 (在两相之间) 对电机的停机进行配置。参见下一参数 EbA。 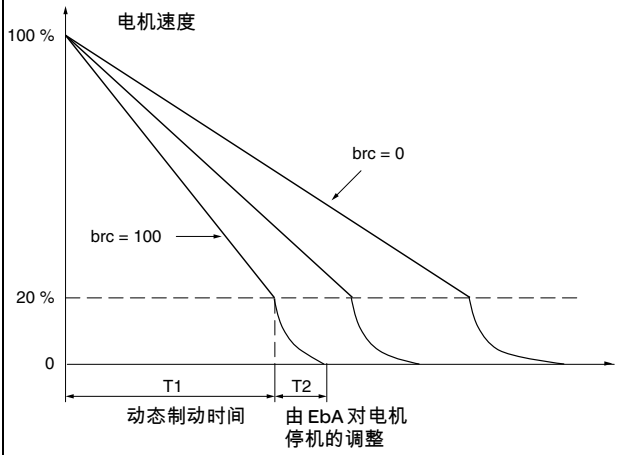 直流电流注入时间 : T2=T1 × EbA 注意 : 时间 T1 不由 brC 决定。T1 是电机速度从额定值的 100% 降至 20% 所需的时间，以秒为单位 (取决于电机和应用场合的特性)。		
EbA	直流制动时间	20 至 100%	20%
	此参数只在 StY=-b- 时才能被访问。 对于 -b- 类停机，调整制动过程末的电流注入时间。 可用于调整电流注入时间。 可设置为动态制动时间 (T1) 的 20 至 100%。 例如 : 动态制动 =10s (T1) 停机时间可从 2 到 10 秒变化 (T2) EbA=20 对应于 2s 的注入时间 EbA=100 对应于 10s 的注入时间 出厂设定 : 20		

保护菜单 (PrO)

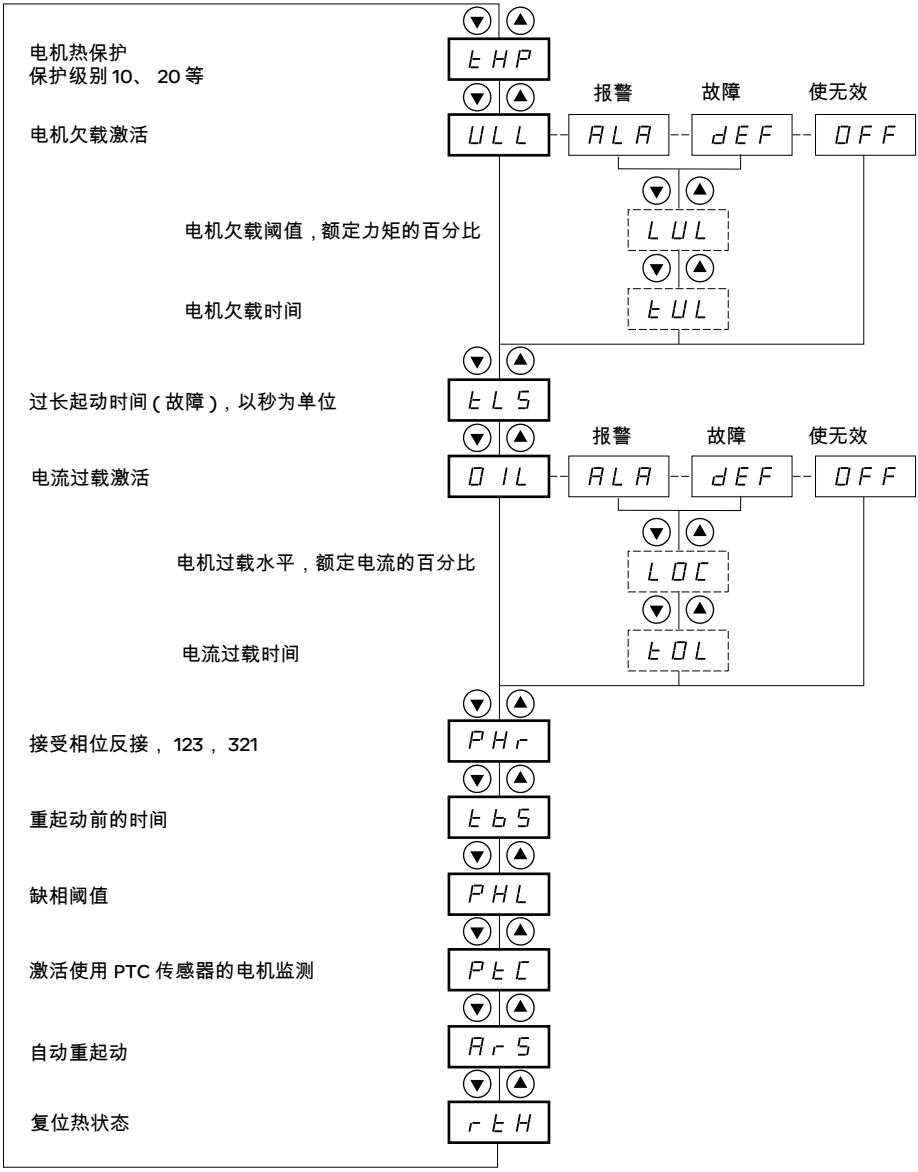

菜单中的参数

可选择

根据选择出现的参数

要访问这些参数，参见 44 页。

这些设定参数只能在电机停机后进行修改。

代码	说明	设定范围	出厂设定
tHP	电机热保护		10
	见 39 页 “热保护”。 30: 30 级 25: 25 级 20: 20 级 (重载应用) 15: 15 级 10: 10 级 (标准应用) 10A: 10A 级 2: 2 子级 OFF: 无保护		
ULL	电机欠载激活		OFF
	如果电机力矩低于一个可调的阈值 LUL 且持续时间超过可调整的值 tUL: - ALA: 报警激活 (内部位和可配置逻辑输出) - dEF: 起动器被锁定，显示 ULF 故障 - OFF: 无保护 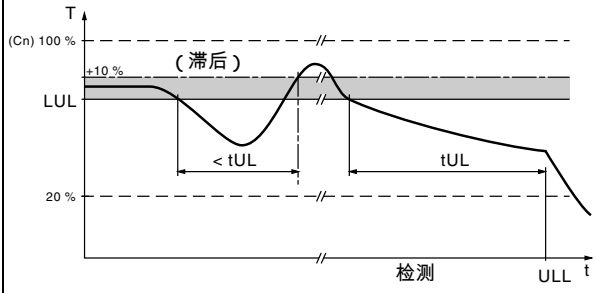 		
LUL	电机欠载阈值	Tn 的 20% 至 100%	60%
	如果 ULL=OFF 则此参数不可用。 LUL 可以设置为电机额定力矩 20% 到 100% 之间的值。		
tUL	电机欠载时间	1 至 60s	60s
	如果 ULL=OFF 则此参数不可用。 一旦电机力矩降至阈值 LUL 以下时间继电器 tUL 会立即激活。当力矩升高到比此阈值 LUL 高 +10% (滞后作用) 时它将被重置为 0。		
tLS	超长起动时间	10 至 999s 或 OFF	OFF
	如果起动时间超过了 tLS 的值，则起动器会被锁定并显示故障 StF。起动结束的条件为 ：施加在电机上的线电压 (最小触发角) 和电机电流低于 1.3In。 - OFF: 无保护		

检测报警 **(ALA)** 配置只能提示存在故障但不能直接对设备进行保护。

中文

代码	说明	设定范围	出厂设定
OIL	电流过载激活		OFF
	功能仅在稳定状态下有效。 如果电机电流超过一个可调的阈值 LOC 且持续时间超过可调整的时间值 tOL: - ALA: 报警激活 (内部位和可配置逻辑输出端) - dEF: 起动器被锁定，显示 OLC 故障 - OFF: 无保护 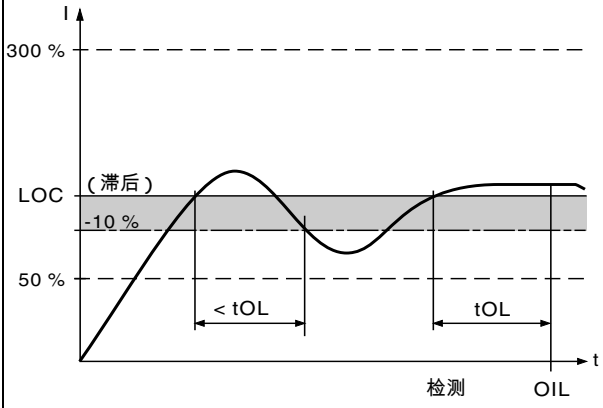 		
LOC	电流过载阈值	In 的 50% 至 300%	80%
	如果 OIL=OFF，则此参数不可用。 LOC 可以在电机额定电流的 50% 到 300% 之间进行设定。		
tOL	电流过载时间	0.1 至 60s	10s
	如果 OIL=OFF，则此参数不可用。 一旦电机电流升至阈值 LOC 以上时间继电器 tOL 会立即激活。当电流降低到比此阈值 LOC 至少低 10% (滞后作用) 时它将被重置为 0。		

检测报警 **(ALA)** 的出厂配置只能提示存在故障但不能直接对设备进行保护。

代码	说明	设定范围	出厂设定
PHr	防止线路相序颠倒	321 或 123 或无	无
	如果相线顺序与配置不同，起动器将锁定并显示故障 PIF。 - 321: 反转 (L3-L2-L1) - 123: 正转 (L1-L2-L3) - no: 无检测		
tbS	起动前的时间	0 至 999 s	2s
	避免电机过热的快速连续起动。当电机转为自由停机模式时时间继电器起动。 在 2 线控制中，如果 RUN 命令输入仍然有效则电机在延时之后重新起动。 在 3 线控制中，如果发送了一个新的 RUN 命令 (上升沿) 则电机在延时之后会重新起动。 在延时过程中起动器显示 “tbS”。		
PHL	缺相阈值	5 至 10%	10%
	如果电机某一相中的电流降至此阈值以下并持续 0.5s 或全部三相中电流全部降至此阈值以下持续 0.2s，则起动器将锁定，并显示故障 PHF。 可以被设置为起动器额定值 ICL 的 5% 到 10% 之间的值。		
PtC	激活使用 **PTC** 传感器的电机监测		OFF
	电机上的 PTC 传感器必须连接到正确的逻辑输入端上。此保护与计算所得热保护 (tHP 参数) 独立。两种保护可以同时使用。 - ALA: 报警激活 (内部位和可配置逻辑输出端) - dEF: 起动器被锁定，显示 OtF 故障 - OFF: 无保护		
ArS	自动重起动	On - OFF	OFF
	在由于故障锁定之后，如果故障已消失且其他的运行条件允许重新起动，则将进行一系列起动器重起动尝试，每次间隔为 60s。如果在 6 次尝试之后还没有成功，则此过程将被放弃，起动器保持在锁定状态，直至关机后重新开机或手动复位 (见 “故障 - 原因 - 处理方法”)。下列故障时此功能有效：PHF、FrF、CLF、USF。如果此功能有效则起动器故障继电器将保持激活。运行命令必须保持。此功能只能用于 2 线控制中。 - OFF: 功能无效 - On: 功能有效 ⚠ 确认偶然起动不会对人员或设备造成任何危险。		
rtH	复位由起动器计算的电机热状态	no - YES	no
	- no: 功能无效 - YES: 功能有效		

⚠ 检测报警 **(ALA)** 的出厂配置只能提示存在故障但不能直接对设备进行保护。

中文

高级设定菜单 (drC)

菜单中的参数

高级设定参数 **(Advanced setting parameters)** 只能在电机停机时进行修改。

代码	说明	设定范围	出厂设定
tLI	力矩限制	10 至 200% 或 OFF	OFF
	可用于限制力矩给定以避免在高惯性应用场合中的再生能量现象。如果 tqO=tLI 则可用于恒力矩起动。 - OFF: 无限制 - 10 至 200: 按额定力矩百分比设定的限定值		
bSt	电压升高水平	50 至 100% 或 OFF	OFF
	当一个运行命令存在达到 100ms 时即可以施加一个可调整的电压。当这段时间结束后，起动器将会按照一个标准的加速斜坡起动，以初始力矩设定值 (tq0) 开始。 此功能可用于避免任何 “起动” 力矩 (由于停止时的摩擦或机械间隙造成的现象)。 - OFF: 功能无效 - 50 至 100: 为电机额定电压的一个百分比 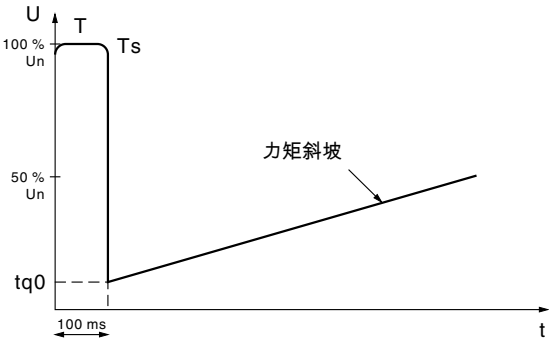 在超过起动器额定值的情况下 **(电机 Im>ATS48 Im)**，参数 **bSt** 的过高值将会导致起动器出现 **OCF** 脱扣。		
dLt	起动器按三角形接法连接	on - OFF	OFF
	此配置允许起动器额定功率值增加至 1.7 倍，但不允许制动或减速。 - OFF: 额定线力矩 - On: 电机按三角形接法连接 电机额定电流 In 与电机铭牌上标注的一样，且显示的电流值对应于电源的线电流。 额定电流值 In (Set 菜单) 与电机铭牌上三角形连接的标注值相同。起动器将自行进行转换以控制绕组中的电流。 该参数只能用于 ATS48●●●Q 或 ATS48●●●YS316 起动器。 • 使用此功能时，不允许选择动态制动停机。 • 不能使用级联功能 • 不能进行预热 • 接线图必须参照第 **443** 页		

中文

代码	说明	设定范围	出厂设定
SSt	小型电机测试	On - OFF	OFF
	要在测试或维护环境中对起动器进行检查，使用功率远小于起动器额定值的电机 (特别是对于大功率的起动器)。 力矩控制参数 CLP 自动无效。 - OFF: 功能无效 - On: 功能有效 • 控制电压一断开 **SSt** 即返回 **OFF** 状态。在下一次起动时， **PHF** 故障和 **CLP** 参数将会返回其初始配置。 • **SST** 仅用于起动器维护与测试。		
CLP	力矩控制 (控制类型)	On - OFF	On
	- OFF: 功能无效 - On: 功能有效 在 On 位置，起动和减速按照力矩斜坡进行。 在 OFF 位置，起动和减速由电压的变化进行控制。 对于多个电机并接在一个起动器上，或电机功率相对于起动器额定值非常小 (用小型号电机测试起动器) 的情况，建议使用电压控制 (CLP=OFF)。		
LSC	定子损耗补偿	0 至 90%	50%
	参数在加速阶段 (或当 StY=-d- 时的减速阶段) 有效。 在出现力矩振荡的情况下，应逐步降低这个参数的值，直至设备正常运行为止。 在起动器与电机按三角形接法连接或滑差率大的电机中振荡是最常见的现象。		
tIG	减速增益 (用于力矩控制)	10 至 50%	40%
	此参数仅在 CLP=On 或 StY 参数 (Set 设定菜单) =-d- 时才可访问。 可用于消除减速过程中的不稳定性。 应根据振荡情况调整这一参数。		
CSC	级联功能激活	On - OFF	OFF
	见 38 页 - On: 功能有效 - OFF: 功能无效 仅当继电器 R1 已事先定义为 “隔离继电器” 功能，或未配置 “强制自由停车”、“起动器三角形接法” 以及 “预热” 功能时可以访问此参数。 定义一个输入端 LI=LIC。 最多 255 个电机。		
ULn	线电压	170 至 460V (ATS48•••Q) 180 至 790V (ATS48•••Y)	400V (ATS48•••Q) 460V (ATS48•••Y)
	此参数用于计算显示的功率 (SUP 菜单中的 LPr 和 LAP 参数)。此显示仅当该参数已被正确设置时才准确。		

代码	说明	调整范围	出厂设定
FrC	线路频率	50-60-AUt	AUt
	- 50: 50Hz (频率故障 FrF 检测容许偏差 = ± 20%)。 - 60: 60Hz (频率故障 FrF 检测容许偏差 = ± 20%)。 - AUt: 由起动器自动识别线路频率，频率故障检测容许偏差 FrF= ± 5%。 如果由发电机组提供电源，因其具有较高的频率检测允许偏差，建议选择 50Hz 或 60Hz。		
rPr	清零 **kWh** 或运行时间	no-APH-trE	no
	- no: 功能无效 - APH: kWh 复位为零 (1) - trE: 运行时间复位为零 清零命令必须使用 ENT 进行确认。 APH 和 trE 立即有效。之后此参数自动返回 no 值。		
FCS	返回出厂设定	no-YES	no
	用于将所有的参数返回其出厂设定。 - no: 功能无效 - YES: 功能有效，必须被按下并保持一段时间 (大约 2s) 以便有效。显示屏会闪烁以示确认。之后按下 ESC 键可自动将 FCS 参数重置为 no。 此参数不能通过远程操作盘进行修改。		

(1) “kWh 消耗” 这个信息，仅当使用 PowerSuite 软件或在线 Modbus 通讯时可见 (地址是 W4074)。

中文

I/O 菜单 (IO)

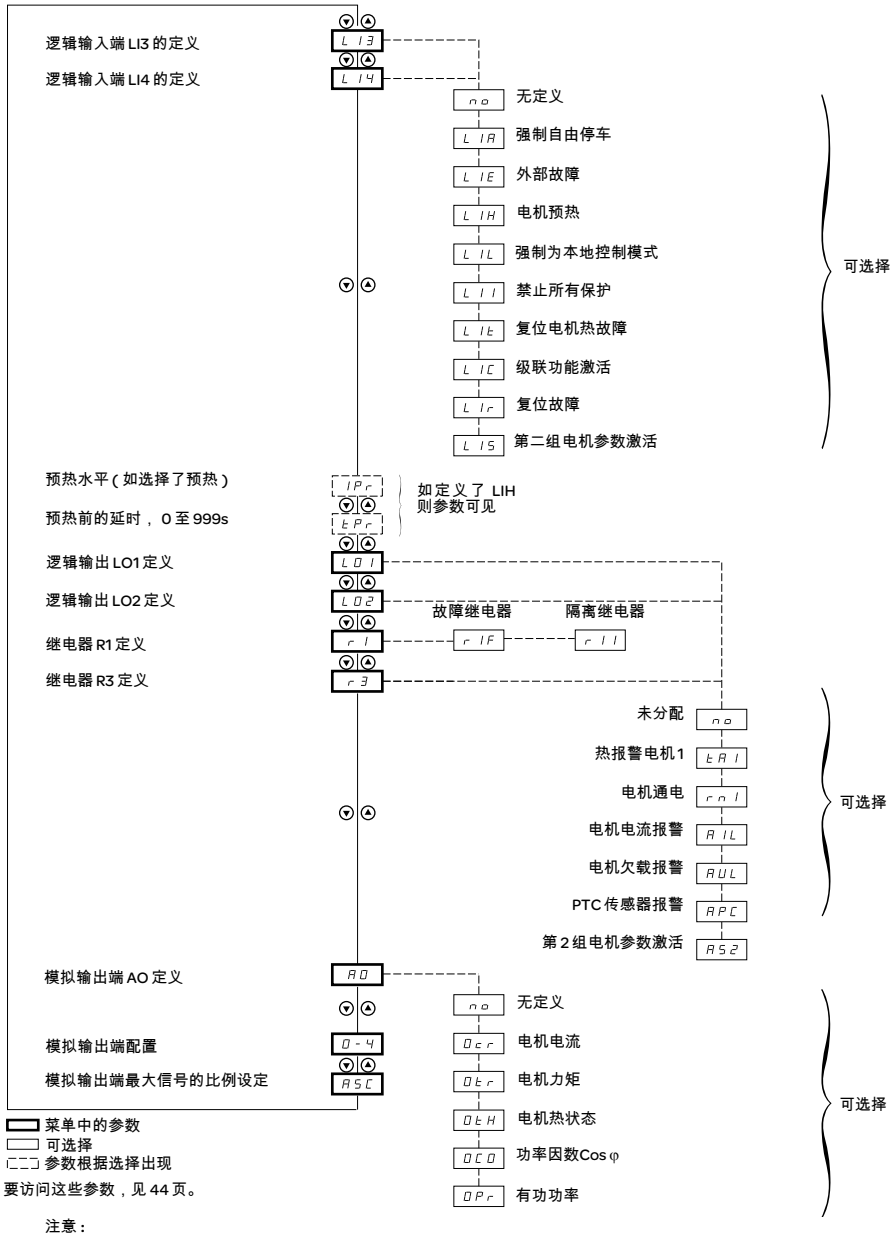

菜单中的参数
可选择
参数根据选择出现

要访问这些参数，见 44 页。

注意：

逻辑输入 RUN: 不能分配
逻辑输入 STOP: 不能分配
起动器旁路接触器控制 : 不能分配 (R2)

I/O 参数只能在电机停机时进行修改。

代码	说明	设定范围	出厂设定
L I3 L I4	逻辑输入		LIA LIL

如果输入端已通电，则所选功能有效。
- no: 未定义
- LIA: 一旦接收到一个 STOP 命令即进行强制自由停车。如果 drC 菜单中的 CSC 参数设为 “ON” 则此选项不会出现。它将强制使用自由停车，但不会对停车进行控制。
- LIE: 外部故障。允许起动器检测外部用户故障 (水位、压力等)。电机进行自动停车且起动器显示 EtF。
- LIH: (1) 电机预热。如果 drC 菜单中的 CSC 参数设为 “ON” 则此选项不会出现。用于防止电机结冰或可能导致冷凝的温度漂移。如果此输入有效，则当电机停机并经过一段可调整的延时之后，将会有一个可调整的电流 IPr 通入电机。该电流对电机进行加热但不会使其转动。 IPr 和 tbr 必须进行调整 (见下图)。

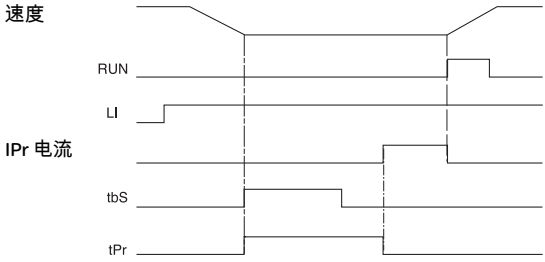

当该输入端激活且电机已停机、且已经过延时 tPr 和 tbS 后，预热开始。如果该输入被禁止、发送了运行命令或激活了 STOP 输入端，则预热停止。
- LIL: 强制为本地控制模式。如果使用了串口，则从线路模式 (通过串口控制) 转为本地模式 (通过终端控制)。
- LII: (1) 禁止所有保护。警告 : 这类应用将使起动器质保失效。用于在紧急情况下对起动器进行控制 (例如烟雾抽取系统)。
- LIt: 重置电机热故障
- LIC: 级联功能激活。在这种情况下电机热保护被禁止且继电器 R1 必须配置为隔离继电器。可用于单个起动器对若干相同电机的顺次起动和减速 (见应用接线图)。
- LIr: 复位可以被复位的故障
- LIS: 第 2 组电机参数激活。用于对两台不同的电机逐个进行起动和减速，或用单个起动器对一台电机进行两种不同配置的起动或减速。

(1) 为使此定义生效， ENT 必须按下 10s (显示屏闪烁以示确认)。
此参数不能通过远程操作盘进行修改。

中文

代码	说明	设定范围	出厂设定
IPr	预热水平	0 至 100%	0%
	此参数在 LI3 或 LI4 已被定义为 LIH 功能 : 电机预热之后出现。它可用于设置预热电流。使用真值电流表来设定电机电流水平。 参数 In 对电流 IPr 没有影响。 **注意** 可能对电机造成的危险或损坏 : 如果电源频率波动，必须强制使用外部设备来检测频率，并停止使用电机预热功能。 不按该指导操作会引起设备损坏。		
tPr	预热前延时	0 至 999s	5s
	此参数在 LI3 或 LI4 已被定义为 LIH 功能 : 电机预热之后出现。当该输入端激活且已经历延时 tPr 和 tbS (PrO 菜单) 后预热开始。		
LO1 LO2	逻辑输出		tAI rnI
	- no: 无定义。 - tAI: 电机热报警。见 39 页。 - rnI: 电机上电 (提示电机中可能有电流)。 - AIL: 电机电流报警 (超出 PrO 菜单中的阈值 OIL 和时间 tOL)。见 “仅在稳定状态下有效的功能”，54 页。 - AUL: 电机欠载报警 (超出了 PrO 菜单中的阈值 LUL 和时间 tUL)。见 53 页。 - APC: 电机 PTC 传感器报警。见 “激活使用 PTC 传感器的电机检测”，55 页。 - AS2: 第 2 组电机参数已激活。见 LIS “逻辑输入”，61 页。		
r1	继电器 **R1**		rIF
	- r1F: 故障继电器。起动器通电时继电器 R1 被激活 (最小 CL1/CL2 控制)。当出现故障及电机转为自由停车模式时继电器 R1 被置为无效。参见当自动重起动功能被激活时的特殊情况以及 “故障 - 原因 - 处理方法”。 - r1I: 隔离继电器。继电器 R1 设计用来以 RUN 和 STOP 命令为基础控制线接触器并提示故障。继电器 R1 由 RUN 命令激活 (或一个预热命令)。在制动或减速结束或当电机在 STOP 命令之后转为自由停车模式时被置为无效。当出现故障时同样无效。电机在此时转换为自由停车模式。		
r3	继电器 **R3**		rnI
	- no: 未定义。 - tAI: 电机热报警。见 39 页。 - rnI: 电机通电 (指示电机中可能有电流)。 - AIL: 电机电流报警 (超出了 PrO 菜单中的阈值 OIL 和时间 tOL)。见 “仅在稳定状态下有效的功能”，54 页。 - AUL: 电机欠载报警 (超出了 PrO 菜单中的阈值 LUL 和时间 tUL)。见 53 页。 - APC: 电机 PTC 传感器报警。见 “激活使用 PTC 传感器的电机检测”，55 页。 - AS2: 第 2 组电机参数已激活。见 LIS “逻辑输入”，61 页。		

起动结束继电器 R2 (不能被定义)

当起动器通电、没有故障且电机已经完成起动阶段时激活起动结束继电器 R2。当出现停止请求或故障时被置为无效。它有一个常开触点 (N/O)。

它可以用于在起动阶段结束时对 ATS 48 进行旁路。

代码	说明	设定范围	出厂设定
AO	模拟输出		OCr
	- no: 无定义 - OCr: 电机电流 - Otr: 电机力矩 - OtH: 电机热状态 - OCO: cos φ - OPr: 有功功率		
O4	输出端 **AO** 给出的信号类型的配置	020 - 420	020
	- 020: 0-20mA 信号 - 420: 4-20mA 信号		
ASC	模拟输出最大信号的比例设定	50 至 500%	200
	为已配置参数额定值的百分比，对于 cos φ 单位为 1。		

第 2 电机参数菜单 (St2)

用于第 1 或第 2 电机的参数由逻辑输入端 (LIS) 选择。选择的电机参数 :

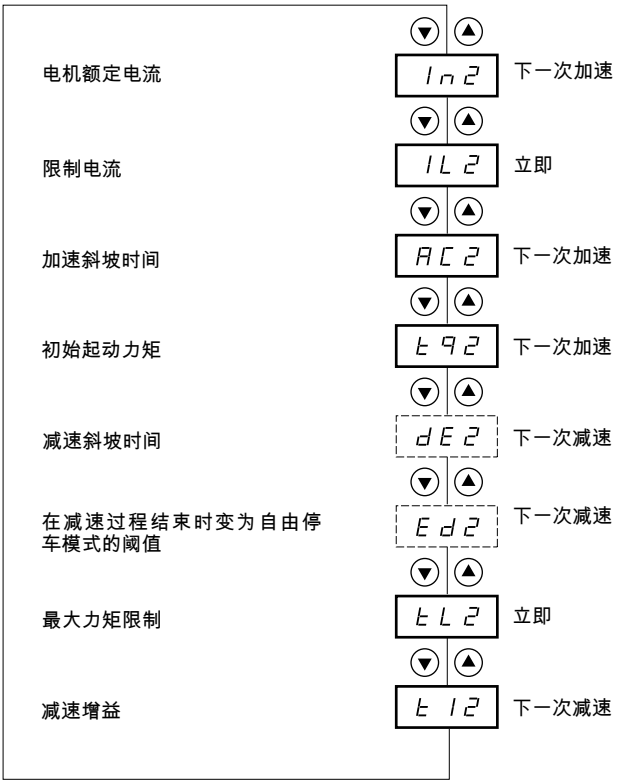

菜单中的参数

参数根据选择和 SET 菜单中 StY 的定义出现

第 2 电机参数菜单 (St2)

仅当一个逻辑输入端分配给激活 I/O 菜单中的第 2 组电机参数 (LIS) 的功能时此菜单才可见。

代码	说明	设定范围	出厂设定
In2	电机额定电流	0.4 至 1.3 倍 ICL	(1)
	调整铭牌上指示的电机额定电流值，即使起动器已连接于电机三角形绕组中 (PrO)。 检查确认电流在 0.4 到 1.3ICL 之间 (ICL: 起动器额定值)。见 “起动器 - 电机组合”，12 页。		
IL2	限制电流	In 的 150 至 700%，限制为 ICL 的 500%	In 的 400%
	限制电流 IL2 以 In2 的百分比表示。 它被限制在 ICL (起动器额定值，见 “起动器 - 电机组合”，12 页) 的 500%。 限制电流 =IL2 × In2 例 1: In2=21A， IL2=300%，限制电流 =300% × 22A=66A 例 2: ATS 48C21Q， ICL=210A In2=195A， IL2=700%，限制电流 =700% × 195=1365， 限制为 500% × 210=1050A		
AC2	加速斜坡时间	1 至 60s	15s
	它是起动器力矩由 0 到额定力矩 Tn 的上升时间，即加速中力矩斜坡的梯度。 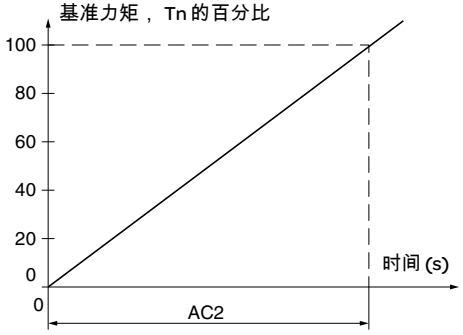 		

(1) In2 的出厂设定对应于一个带 10 级保护的 4 极 400V 标准化电机的通常值 (对于 ATS 48•••Q)。
In2 的出厂设定对应于一个符合 NEC 并带有 10 级保护的 460V 标准化电机的通常值 (对于 ATS 48•••Y)。

中文

代码	说明	设定范围	出厂设定
tq2	初始起动力矩	Tn 的 0 至 100%	20%
	起动阶段的初始力矩，从额定力矩的 0 变化到 100%。 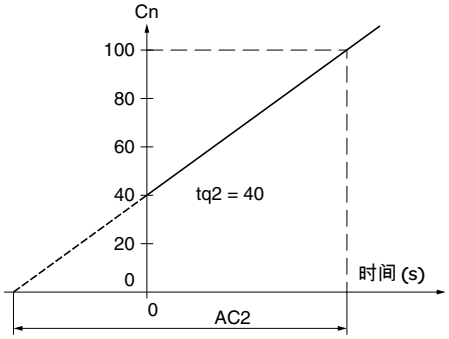 		
dE2	减速斜坡时间	1 至 60s	15s
	此参数仅当 StY=-d- 时才能访问。 用于设定 1 至 60s 的时间从估算力矩到零力矩转换 (= 采用 -d- 类停机时减速中力矩斜坡的梯度)。 它可以通过修改力矩基准的梯度，改变减速进程，避免泵应用中的液体冲击。 估算力矩，额定力矩的百分比 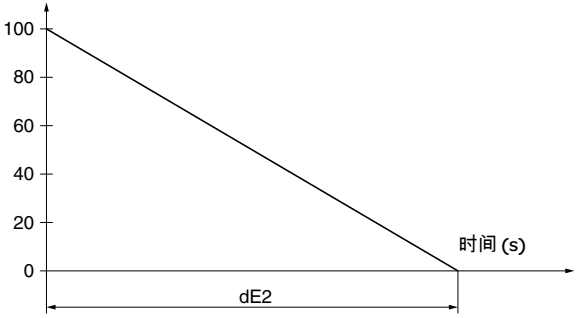 		

代码	说明	设定范围	出厂设定
Ed2	在减速过程结束时变为自由停车模式的阈值	0 至 100%	20%
	此参数仅当 StY=-d- 或高级设定菜单 (drC) 中的 CLP 参数仍设为出厂设定 (On) 时才可以访问。 用于在减速开始时估算力矩的 0 至 100% 之间设定最终力矩水平。 在泵应用中，减速控制不一定低于由 Edc 设置的负载水平。 如果减速开始时估算的力矩低于 20，即额定力矩的 20%，则不会激活受控减速，电机将转为自由停车模式。 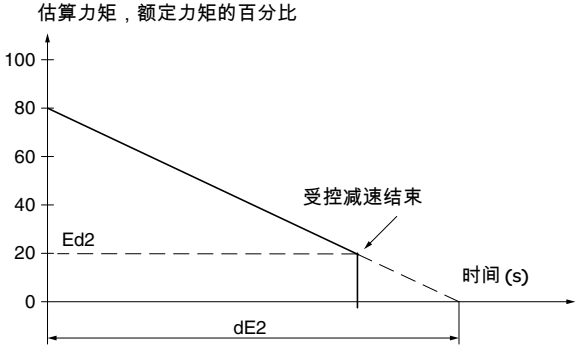 		
tL2	最大力矩限制	10 至 200% 或 OFF	OFF
	用于限制力矩给定以避免在高惯性应用场合中的再生能量效应。 如果 tq2=tLI 则可用于恒力矩起动。 - OFF: 无限制 - 10 至 200: 限制设定为额定力矩的百分比		
t12	减速增益 (用于力矩控制)	10 至 50%	40%
	此参数仅当 CLP=On 或 StY 参数 (Set 设定菜单) =-d- 才能访问。 用于消除减速过程中的不稳定性。 根据振动情况调整参数。		

通讯菜单 (COP)

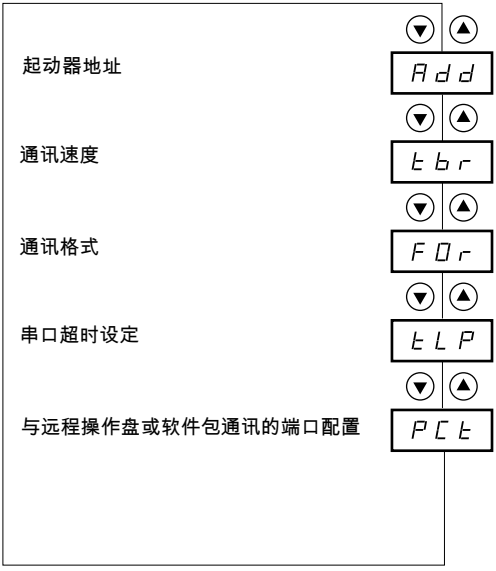

菜单中的参数

通讯菜单 (COP)

通讯菜单参数只能在电机停机时进行修改。
使用的内部协议为 Modbus。

代码	说明	设定范围	出厂设定
Add	起动器地址， RS485 串口	0 至 31	0
tbr	通讯速度， kbps	4.8 - 9.6 - 19.2	19.2
FOr	通讯格式 8o1: 8 个数据位，奇校验， 1个停止位 8E1: 8 个数据位，偶校验， 1个停止位 8n1: 8 个数据位，无校验， 1个停止位 8n2: 8 个数据位，无校验， 2个停止位		8n1
tLP	串口超时设定 (1)	0.1 至 60s	5s
PCt	用于与远程操作盘通讯的串口配置 On: 功能有效。临时配置起动器 (tbr 和 For) 用于与远程操作盘的通讯，以备 tbr 和 For 不是出厂设置值时。 OFF: 临时配置功能无效 控制电压一断开 **PCT** 即返回 **OFF** 状态。下一次通电时，**tbr** 和 **For** 参数将返回其初始配置。		OFF

(1) 确认此时间设定不会干扰机器的安全运行

中文

显示参数菜单 (SUP)

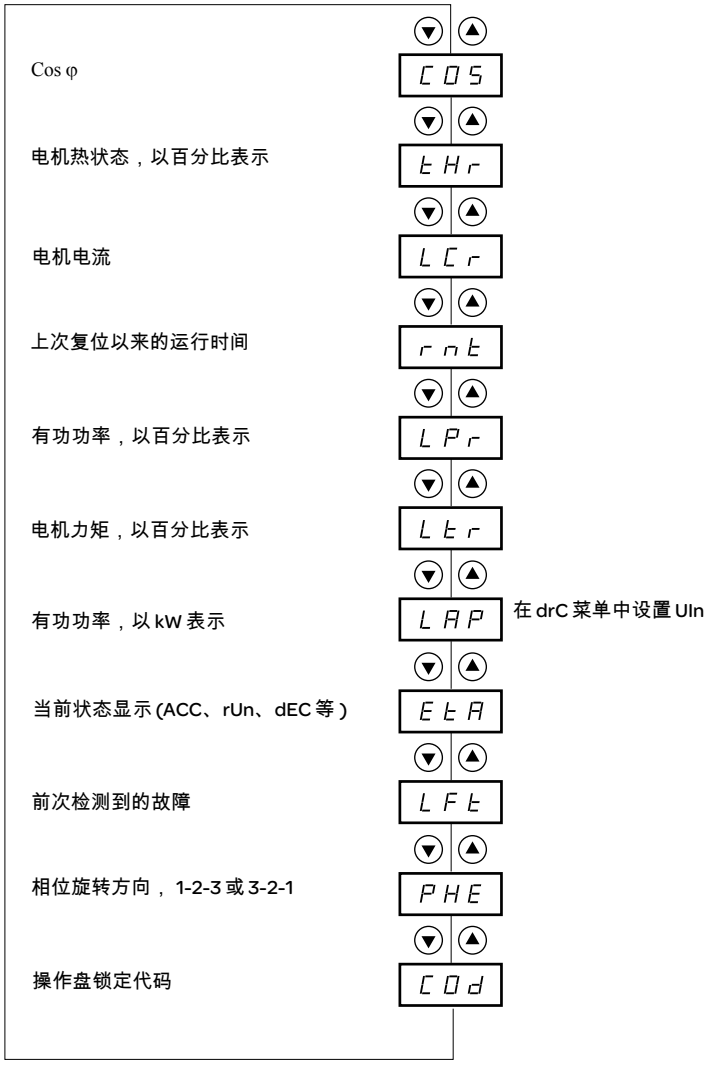

菜单中显示的参数

显示参数菜单 (SUP)

要显示的参数可以在电机停机或运行时进行修改。
出厂设定为显示电机电流 (参数 LCr)。
选择显示项保存 :

- 按 ENT 键一次 : 该选择为临时性的，在下次上电时将被清除。
- 再次按下 ENT 键 2 秒钟 : 显示屏闪烁，此选择为永久性的，不能再修改。

代码	参数	单位
COS	Cos φ	0.01
tHr	电机热状态 从 0 变化到 125% 100% 对应于电流 In 设定的额定热状态。	%
LCr	电机电流 以安培为单位，最高 999A (例 : 01.5=1.5A ； 15.0=15A ； 150=150A) 从 1000A 开始以千安为单位 (例 : 1.50=1500 ； 1.15=1150A)	A 或 kA
rnt	运行时间，自上次复位起，以小时为单位。 以小时为单位，最大 999 小时 (例 : 001=1hr ； 111=111hr) 从 1000 到 65535 以千小时为单位 (例 : 1.11=1110hr ； 11.1=11100hr) 超过 65535 小时 (65.5) 显示将被复位为 0。 当电机不停机，即晶闸管被触发 (加热、加速、稳定状态、减速、制动) 及连续旁路运行时对运行时间进行计数。 可以在线控模式中使用控制字或在电机停机时通过操作盘对小时计数器进行清零。 当控制部分断电时小时计数器的值被存入 EEPROM 中。	h 或 kh
LPr	有功功率 从 0 至 255% 变化。 100% 对应于在额定电流和满电压时的功率。	%
Ltr	电机力矩 从 0 至 255% 变化。 100% 对应于在额定力矩。	%
LAP	有功功率，单位为 **kW** 此参数要求在 drC 菜单中配置线电压 Uln 的准确值。	kW
EtA	当前状态显示 - nLP: 起动器无运行命令且未通电 - rdY: 起动器无运行命令且已通电 - tbS: 未经历起动延时 - ACC: 正在加速 - dEC: 正在减速 - rUn: 稳定状态运行 - brL: 正在制动 - CLI: 起动器处于电流限制模式 - nSt : 由串口强制为自由停车模式	
LFt	前次检测到的故障 (见 75 页)。 如果没有保存任何故障，则显示 nOF. 如果故障已被禁止 , 则显示 Inh。	
PHE	相位旋转方向，从起动器方向看 - 123: 正转 (L1-L2-L3) - 321: 反转 (L3-L2-L1)	

中文

显示参数菜单 (SUP)

代码	参数
COd	操作盘锁定代码 允许使用访问密码对起动器配置进行保护。 注意 : 在输入密码之前，切勿忘记将密码记下。 • **OFF:** 无访问锁定密码 - 要对访问进行锁定，输入一个密码 (2 至 999)。显示项可使用 ▲ 键递增。现在按 ENT。画面上出现 “On” 提示参数已被锁定。 • **On:** 访问已被密码锁定 (2 至 999) - 要对访问进行解锁，应输入密码 (使用 ▲ 键递增显示项) 并按 ENT。该密码将一直保留在显示屏上，访问本解锁，直至下一次断电为止。下一次在上电时参数访问会被重新锁定。 - 如果输入了一个错误的密码，显示将会变为 “On” 且参数保持锁定。 • **XXX:** 参数访问被解锁 (密码保留在画面上)。 - 在参数已被解锁后要使用相同的密码重新激活锁定，可使用 t 键返回 “On” 并按 ENT。画面上出现 “On” 提示参数已被锁定。 - 在参数已被解锁后要使用新密码对访问进行锁定，可输入一个新密码 (使用 ▲ 或 t 键改变显示项) 并按 ENT。画面上出现 “On” 提示参数已被锁定。 - 在参数已被解锁后要清除锁定，可使用 t 键返回 “OFF” 并按 ENT。“OFF” 将保留在画面上。参数被解锁并保持至下一次重起动为止。

当使用密码对访问进行锁定时，只有监测参数可以访问，且仅显示参数的临时选项。

兼容性表

应用功能的选择会受到某些功能不兼容的限制。在下表中未列出的功能均可与其他任何功能兼容。

功能	软停止	动态制动停车	强制自由停车	热保护	电机缺相	与电机按三角形连接	小型电机测试	级联	预热
软停止									
动态制动停车									
强制自由停车									
热保护									(2)
电机缺相									(1)
与电机按三角形连接									
小型电机测试									
级联									
预热				(2)					

	兼容功能
	不兼容功能
	无意义

(1) 不检测电机缺相
(2) 当电机正在预热时，不进行热保护。应设置预热电流 IPr。

维护

ATS 48 不需要任何预防性维护。建议定期进行以下维护工作：

- 检查连接的状态和紧固程度
- 确保部件周围的温度保持在可接受的水平而且通风有效 (风扇平均寿命：3 至 5 年，取决于运行条件)
- 如有必要应清除散热器上的所有灰尘

维护指南

如果在设置或运行过程中出现问题，应确保遵守与环境、安装和连接相关的规定。

检测到的第一个故障被记忆下来并在屏幕上显示：起动器锁定，继电器 R1 和 R2 根据其定义改变状态。

清除故障

出现不能被复位的故障时应关闭起动器电源。
等待显示屏内容完全消失。
查找故障原因以便排除。
恢复电源 : 如果故障已消除，则此操作可以清除故障状态。

如果已定制了自动重起动功能，则在某些情况下当故障消失后可能会自动重起动。

监测菜单

通过显示起动器状态及其当前参数值来防止和查找故障原因。

备件及修理

请咨询施耐德电气的产品支持部门。

故障 - 原因 - 处理方法

按照常规，如果起动器起动时出现故障，则建议返回出厂设定值并重新按步骤进行设置。

起动器不起动，无故障显示

- 无显示：检查控制电源 CL1/CL2 上是否有电源 (见 27 页)。
- 检查显示的代码是否与起动器正常状态对应 (见 45 页)。
- 检查是否有 RUN/STOP 命令 (见 28 页)。

不能被复位的故障

当此类故障出现时，起动器锁定，电机转为自由停车模式。

故障迹象：
- 起动结束继电器 R2 断开
- 继电器 R1 断开 (在起动器锁定之后)
- 显示屏上故障代码闪烁
- 存储最近的 5 次故障，使用 PowerSuite 软件包可以查看

重起动条件：
- 故障原因消失
- 控制电源断开及重新连接

故障显示	可能原因	规程，处理办法
InF	内部故障	断开控制电源后再重新连上。如果故障仍然存在，应联系施耐德电气产品支持部门。
OCF	过电流： • 起动器输出短路 • 内部短路 • 旁路接触器粘连 • 超过起动器额定值	关闭起动器电源。 ？t 检查连接电缆和电机隔离。 ？t 检查晶闸管 ？t 检查旁路接触器 (触点粘连) ？t 检查菜单 drC 中参数 bSt 的值见 57 页
PIF	相序颠倒 电源倒相不符合 Protection (保护) 菜单中 PHr 参数的选择。	倒换两条相线或设置 PHr=no
EEF	内部存储故障	断开控制电源后再重新连上。如果故障仍然存在，应联系施耐德电气产品支持部门。

中文

故障原因一消失即可被复位的故障

当此类故障出现时，起动器锁定，电机转为自由停车模式。

故障现象：
- 起动结束继电器 R2 断开。
- 仅当作为隔离继电器时继电器 R1 断开。
- 只要故障存在，显示屏上就一直有故障代码闪烁。
- 存储最近的 5 次故障，使用 PowerSuite 软件可以查看。

重起动条件：
- 故障原因消失
- 在 2 线控制中运行命令必须保留在 RUN 输入端。
- 在 3 线控制中 RUN 输入端需要有新的运行命令 (上升沿)。

故障显示	可能原因	规程，处理办法
CFF	通电时无效配置	• 在高级设定菜单 drC 中返回出厂设定值 • 重新配置起动器。
CFI	无效配置 通过串口载入起动器的配置与之不兼容。	• 检查前一次载入的配置。 • 载入兼容的配置。

可以被复位并能使起动器自动重新起动的故障 (1)

当此类故障出现时，起动器锁定，电机转为自由停车模式。

伴随自动重起动的故障迹象：
- 起动结束继电器 R2 断开
- 仅当作为隔离继电器时继电器 R1 断开。如果配置为故障继电器则 R1 保持闭合，见 62 页
- 只要故障存在，显示屏上就一直有故障代码闪烁
- 存储最近的 5 次故障，使用 PowerSuite 软件包可以查看

重起动条件，对于下表中伴随自动重起动的故障 (仅在 2 线控制中)：
- 故障原因消失
- 在 RUN 输入端保留有运行命令
- 进行 5 次重起动尝试，每次间隔 60 秒。如果在第 6 次尝试时故障仍然存在，则将成为不可复位的故障。
- 进行 6 次重起动尝试，每次间隔 60 秒。如果在第 6 次尝试时故障仍然存在，则它将脱扣，需要手动复位 (见下页)，且如果被配置为故障继电器则 R1 断开。

故障显示	可能原因	处理方法
FrF (2)	电源频率，超出允许范围 此故障状态可在 Advanced settings (高级设定) 菜单 drC 中的 FrC 参数进行配置。	• 检查电源。 • 检查 FrC 参数的配置是否与所使用的电源匹配 (例如发电机组)。
PHF (3)	电源缺相	• 检查线路、频率稳定性、与起动器以及位于线路和起动器 (起动器、熔断器、断路器等) 之间任何设备的连接 • 如果使用旁路接触器，请检查机构 (磨损、机械运动、润滑与堵塞 ...)
	电机缺相 如果电机某一相电流降至可调整的阈值 PHL 以下超过 0.5s 或三相均降至该阈值以下超过 0.2s。此故障状态可在保护菜单 Pro 中的 PHL 参数进行配置。	• 检查电机连接 (T1, T2, T3 终端) 以及所有处于起动器和电机之间的隔离设备 (接触器、熔断器、断路器等)。 • 检查电机状态。 • 检查 PHL 参数的配置是否与所使用的电机匹配。

(1) 如果没有选择自动重起动功能，则应参见 78 页这些故障的现象和重起动条件。
(2) 在控制电源每次通电之后，仅在主电源首次通电时进行 FRF 检测。
(3) 当主电源随后通电时，不稳定的频率还将产生同步失效故障 PHF。

可以被复位并能使起动器自动重新起动的故障 (1)

下列故障的重起动情况：
- 故障原因消失
- 运行命令保持 (仅对 2 线控制)

故障显示	可能原因	处理方法
USF	有运行命令时动力电源故障	• 检查动力电源电路和电压。
CLF	控制线路故障	• CL1/CL2 缺失超过 200ms

(1) 当此类故障出现时，起动器锁定，电机转为自由停车模式。

可以被手动复位的故障

当此类故障出现时，起动器锁定，电机转为自由停车模式。

故障现象：
- 起动结束继电器 R2 断开
- 继电器 R1 断开
- 只要故障存在，显示屏上就一直有故障代码闪烁
- 存储最近的 5 次故障，使用 PowerSuite 软件包可以查看

重起动条件：
- 故障原因消失
- 用一个运行命令 (2 线或 3 线控制，需要 RUN 输入端的上升沿) 复位故障 (1)
- 另一个运行命令 (2 线或 3 线控制，需要 RUN 输入端的上升沿) 重起动电机

故障显示	可能原因	规程，处理办法
SLF	串口故障	• 检查 RS485 连接。
EtF	外部故障	• 检查已被考虑的故障。
StF	起动时间过长	• 检查机械 (磨损情况、机械间隙、润滑、阻塞等)。 • 检查 PrO 菜单中的 tLs 参数设定值， 53 页。 • 检查与机械要求相关的起动器 - 电机选型。
OLC	电流过载	• 检查机械 (磨损情况、机械间隙、润滑、阻塞等)。 • 检查 PrO 菜单中的 LOC 和 tOL 参数设定值，54 页。
OLF	电机热故障	• 检查机械 (磨损情况、机械间隙、润滑、阻塞等)。 • 检查与机械要求相关的起动器 - 电机选型。 • 检查 PrO 菜单中的 tHP 参数设定值 (53 页) 和 SEt 菜单 (53 页) 中的 In 参数设定值。 • 检查电机的电气隔离。 • 等待电机冷却下来后再重新起动。
OHF	起动器热故障	• 检查机械 (磨损情况、机械间隙、润滑、阻塞等)。 • 检查与电机和机械要求相关的起动器选型。 • 检查风扇 (如果所用的 ATS48 有的话) 的运行情况，保证空气通路不会受到任何阻断，且散热器清洁。确保遵守安装建议。 • 等待 ATS48 冷却下来后再重新起动。

(1) 如果 LI 被定义为 “故障复位 (LIr)” 功能，则有运行命令时不会产生复位。

可以被手动复位的故障

故障显示	可能原因	处理方法
OtF	由 PTC 传感器检测到的电机热故障	• 检查机械 (磨损情况、机械间隙、润滑、阻塞等)。 • 检查与机械要求相关的起动器 - 电机选型。 • 检查 Pro 菜单中的 PtC 参数设定值，55 页。 • 等待电机冷却下来后再重新起动。
ULF	电机欠载	• 检查液压回路。 • 检查 Pro 菜单中的 LUL 和 tUL 参数设定值， 53 页。
LrF	稳定状态下转子锁定 此故障仅在有起动器旁路接触器的稳定状态下有效。如果某一相电流大于或等于 5In 并超过 0.2s 就将检测到这一故障。	• 检查机械 (磨损情况、机械间隙、润滑、阻塞等)。

使用逻辑输入复位故障

如果一个逻辑输入 LI 被配置为 “reset motor thermal fault (复位电机热故障)” 或 “reset faults which can be reset (复位可被复位的故障)”，则必须满足下列条件 :

- 逻辑输入端有一个脉冲
- 在 2 线控制中如果在 RUN 输入端保持有运行命令，则电机会重起动。
- 在 3 线控制中如果在 RUN 输入端有新的运行命令 (上升沿)，则电机会重起动。

配置 / 设定表

ATS 48 起动器 ..... 客户识别号码 (如果有) ..... 访问密码 (如果有) .....

设定菜单 SEt

代码	出厂设定	用户设定	代码	出厂设定	用户设定
In	(1)		dEC	15s	
ILt	400%		EdC	20%	
ACC	15s		brC	50%	
t90	20%		EbA	20%	
Sty	-F-				

如果配置了相应的功能，则阴影框中的参数出现。

保护菜单 Pr0

代码	出厂设定	用户设定	代码	出厂设定	用户设定
tHP	10		tOL	10.0	
ULL	OFF		PHr	no	
LUL	60%		tbS	2s	
tUL	60%		PHL	10%	
tLS	OFF		PtC	OFF	
OIL	OFF		ArS	OFF	
LOC	80%		rtH	no	

如果配置了相应的功能，则阴影框中的参数出现。

(1) 取决于起动器额定值。

中文

高级设定菜单 drC

代码	出厂设定	用户设定	代码	出厂设定	用户设定
tLI	OFF		LSC	50%	
bSt	OFF		t IG	40%	
dLt	OFF		CSC	OFF	
SSt	OFF		ULn	(1)	
CLP	On		FrC	AUt	

如果配置了相应的功能，则阴影框中的参数出现。

I/O 菜单 IO

代码	出厂设定	用户设定	代码	出厂设定	用户设定
L I3	LIA		r I	rII	
L I4	LIL		r 3	rn1	
IPr	0%		AO	OCr	
tPr	5s		O 4	020	
LO I	tA1		ASC	200	
LO2	rn1				

如果配置了相应的功能，则阴影框中的参数出现。

(1) -ATS 48•••Q: 400V
-ATS 48•••Y: 460V

第 2 电机参数菜单 St2

仅当有一个逻辑输入端在 I/O 菜单中被定义为激活第 2 组电机参数的功能时，此菜单才有效。

代码	出厂设定	用户设定	代码	出厂设定	用户设定
In2	(1)		dE2	15s	
IL2	400%		Ed2	20%	
AC2	15s		tL2	OFF	
t92	20%		t I2	40%	

通讯菜单 COP

代码	出厂设定	用户设定	代码	出厂设定	用户设定
Add	0		tLP	5s	
tbr	19.2kbps		PCt	OFF	
FOr	8n1				

(1) 取决于起动器额定值。

ATS48_User_manual_1494409_04

1494409 12/2012

BEST CONTROLS CO.

PC-3000 CONTROLLER

POWER UP (MAIN SCREEN)

```
LEV= XX.X FT LP=X
ALL PUMPS OK
```

DEPRESS [MENU] FOR 10 SEC.

DEPRESS [UP] & [DOWN] FOR 10 SECONDS

LEVEL AT WHICH THE LEAD PUMP WILL START

```
LEV= XX.X FT LP=X
LEAD ON  = XX.XFT *
```

DEPRESS [NEXT] #

LEVEL AT WHICH THE LEAD PUMP WILL STOP

```
LEV= XX.X FT LP=X
LEAD OFF= XX.XFT *
```

DEPRESS [NEXT] #

LEVEL AT WHICH THE LAG PUMP WILL START

```
LEV= XX.X FT LP=X
LAG ON   = XX.XFT *
```

IF THE CONTROLLER IS CONFIGURED FOR ONLY ONE PUMP, THE MENU WILL SKIP TO THE HIGH ALARM SETUP SCREEN.

DEPRESS [NEXT] #

LEVEL AT WHICH THE LAG PUMP WILL STOP

```
LEV= XX.X FT LP=X
LAG OFF  = XX.XFT*
```

DEPRESS [NEXT] #

LEVEL AT WHICH THE LAG2 PUMP WILL START

```
LEV= XX.X FT LP=X
LAG2 ON  = XX.XFT *
```

IF THE CONTROLLER IS CONFIGURED FOR ONLY TWO PUMPS, THE MENU WILL SKIP TO THE HIGH ALARM SETUP SCREEN.

DEPRESS [NEXT] #

LEVEL AT WHICH THE LAG2 PUMP WILL STOP

```
LEV= XX.X FT LP=X
LAG2 OFF  = XX.XFT*
```

DEPRESS [NEXT] #

LEVEL AT WHICH THE THE HIGH ALARM WILL BE SET

```
LEV= XX.X FT LP=X
HI ALARM  = XX.XFT *
```

DEPRESS [NEXT] #

LEVEL AT WHICH THE THE LOW ALARM WILL BE SET

```
LEV= XX.X FT LP=X
LO ALARM  = XX.XFT*
```

DEPRESS [NEXT] #

*

TO MAKE CHANGES IN THIS VALUE, PRESS THE [UP] OR [DOWN] OR HOLD THE [ADJ] IN THEN TURN THE [ADJ KNOB] UNTIL THE VALUE IS CORRECT. WHEN COMPLETE PRESS THE [NEXT]

NOTE:
AT ANY TIME YOU CAN DEPRESS THE [RESET] TO RETURN TO THE MAIN SCREEN.

\#

IF THE CURRENT VALUE HAS CHANGED, THE SCREEN WILL ASK IF YOU WANT TO SAVE THE CHANGE.

[SAVE ? (Y/N)]

TO SAVE THE VALUE DEPRESS THE [YES]

TO DISCARD THE CHANGE, DEPRESS THE [NO]

ALTERNATION

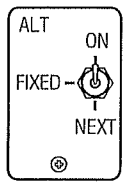

- TO SET ALTERNATION ON PUSH ALT SWITCH UP.
- TO SET ALTERNATION OFF PUSH ALT SWITCH DOWN UNTIL REQUIRED LEAD PUMP IS DISPLAYED IN UPPER RIGHT OF DISPLAY. [LP=X]

DN = PUMP DOWN WITH LEVEL IN FEET
UPF = PUMP UP WITH LEVEL IN FEET →
UPP = PUMP UP WITH PRESSURE IN PSI

RANGE IN FEET OF THE LEVEL TRANSMITTER

```
LEV= XX.X FT LP=X
MAX LEVEL= XX.XFT *
```

DEPRESS [NEXT] # (00.0 TO 50.8 FT)

LEVEL WHEN THE XDUCER IS OUT OF THE WATER

```
LEV= XX.X FT LP=X
OFFSET     XX.XFT  *
```

DEPRESS [NEXT] # (00.0 TO 12.6 FT)

NUMBER OF PUMPS

```
LEV= XX.X FT LP=X
HOW MANY PUMPS X*
```

DEPRESS [NEXT] # (1 TO 3)

DELAY IN SECONDS BETWEEN PUMP STARTS

```
LEV= XX.X FT LP=X
START DELAY XXXS *
```

DEPRESS [NEXT] # (0 TO 255 SEC.)

DELAY IN SECONDS BETWEEN PUMP STOPS

```
LEV= XX.X FT LP=X
STOP  DELAY XXXS  *
```

DEPRESS [NEXT] # (0 TO 127 SEC.)

MIN TIME FOR SETPOINT SATISFACTION

```
LEV= XX.X FT LP=X
TIME AT SP  XXXS  *
```

DEPRESS [NEXT] # (0 TO 31 SEC.)

HIGH ALARM LATCH UP

```
LEV= XX.X FT LP=X
HIGH LATCH XX     *
```

DEPRESS [NEXT] # (YES OR NO)

CONTROLLER PUMP DIRECTION

```
LEV= XX.X FT LP=X
PUMP UP/DN   XX   *
```

DEPRESS [NEXT] # (UP OR DOWN)

QUICK SETUP CHART

(OVER TO BACK PAGE)

BEST CONTROLS PC-3000 QUICK SETUP CHART

(FROM OTHER SIDE OF QUICK SETUP CHART)

*
TO MAKE CHANGES IN THIS VALUE, PRESS THE UP OR DOWN OR HOLD THE ADJ IN THEN TURN THE ADJ KNOB UNTIL THE VALUE IS CORRECT. WHEN COMPLETE PRESS THE NEXT

#
IF THE CURRENT VALUE HAS CHANGED, THE SCREEN WILL ASK IF YOU WANT TO SAVE THE CHANGE.
SAVE ? (Y/N)
TO SAVE THE VALUE DEPRESS THE YES
TO DISCARD THE CHANGE, DEPRESS THE NO

BACKUP CONTROLLER OFF DELAY TIME

```
LEV= XX.X FT LP=X
BACKUP TIME XXXS *
```

DEPRESS NEXT # (0 TO 255 SEC.) SET TO ZERO TO DISABLE

TIME FROM PUMP START TO RUN CONFIRM

```
LEV= XX.X FT LP=X
START TEST XXXS *
```

DEPRESS NEXT # (0 TO 63 SEC.) SET TO ZERO TO DISABLE

SEAL LEAK SENSOR SETUP

USE THE UP AND DOWN KEYS TO SELECT ONE OF THE FOLLOWING:		
SEAL NORM AUTO R	SEAL FAIL WHEN SENSOR < 50K OHM	RESETS WHIN CLEAR
SEAL NORM LATCH	SEAL FAIL WHEN SENSOR < 50K OHM	MANUAL RESET
SEAL INVR AUTO R	SEAL FAIL WHEN SENSOR > 50K OHM	RESETS WHIN CLEAR
SEAL INVR LATCH	SEAL FAIL WHEN SENSOR > 50K OHM	MANUAL RESET

< 50K Ω

```
LEV= XX.X FT LP=X
SEAL XXX YYYYY *
```

DEPRESS NEXT #

TEMPERATURE SENSOR SETUP

USE THE UP AND DOWN KEYS TO SELECT ONE OF THE FOLLOWING:		
TEMP NORM AUTO R	TEMP FAIL WHEN SENSOR OPEN	RESETS WHIN CLEAR
TEMP NORM LATCH	TEMP FAIL WHEN SENSOR OPEN	MANUAL RESET
TEMP INVR AUTO R	TEMP FAIL WHEN SENSOR SHORTED	RESETS WHIN CLEAR
TEMP INVR LATCH	TEMP FAIL WHEN SENSOR SHORTED	MANUAL RESET

```
LEV= XX.X FT LP=X
TEMP XXX YYYYY *
```

DEPRESS NEXT #

AUXILLARY RELAY SETUP

USE THE UP AND DOWN KEYS TO SELECT ONE OF THE FOLLOWING:		
AUX R	HORN	AUX RELAY IS HORN RELAY
AUX R	SEAL	AUX RELAY WILL CLOSE ON ANY SEAL FAIL
AUX R	TEMP	AUX RELAY WILL CLOSE ON ANY TEMP FAIL
AUX R	SEAL TEMP	AUX RELAY WILL CLOSE ON ANY SEAL OR TEMP FAIL
AUX R	ALL	COMMON ALARM RELAY (HIGH, LOW, TEMP, OR PUMP FAIL)

```
LEV= XX.X FT LP=X
AUX R HORN *
```

DEPRESS NEXT #

ETM VIEW

POWER UP (MAIN SCREEN)

```
LEV= XX.X FT LP=X
ALL PUMPS OK
```

DEPRESS DOWN

DEPRESS UP DEPRESS DOWN

```
LEV= XX.X FT LP=X
ETM1 XXXXX.X HR
```

DEPRESS UP DEPRESS DOWN

```
LEV= XX.X FT LP=X
ETM2 XXXXX.X HR
```

DEPRESS UP DEPRESS DOWN

```
LEV= XX.X FT LP=X
ETM3 XXXXX.X HR
```

DEPRESS UP

USE THE UP AND DOWN KEYS TO SELECT NORMAL OR JOCKEY PUMP ALTERNATION (TRHEE PUMP SYSTEMS ONLY)

```
LEV= XX.X FT LP=X
ALTERNATE XXXXX *
```

DEPRESS NEXT #

USE THE UP AND DOWN KEYS TO SELECT THE MAXIMUM NUMBER OF PUMPS WHICH CAN BE ON AT ONCE

```
LEV= XX.X FT LP=X
MAX ON AT ONCE X*
```

DEPRESS NEXT # (1 TO 3)

LEVEL AT WHICH THE ANALOG OUTPUT IS 4 Ma.

```
LEV= XX.X FT LP=X
A OUT LOW XX.XFT *
```

DEPRESS NEXT # (OFFSET TO FULL SCALE)

LEVEL AT WHICH THE ANALOG OUTPUT IS 20 Ma.

```
LEV= XX.X FT LP=X
A OUT HI XX.XFT *
```

DEPRESS NEXT # (OFFSET TO FULL SCALE)

NOTE:
AT ANY TIME YOU CAN DEPRESS THE RESET TO RETURN TO THE MAIN SCREEN.