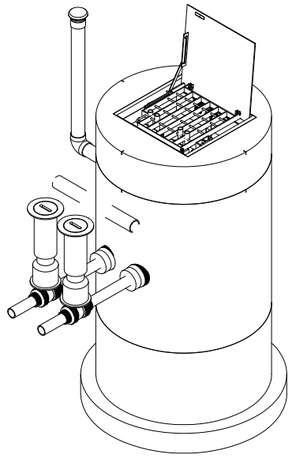

SENSOR AND ELEVATION TABLE		
LEVEL ELEVATION	DISTANCE BETWEEN POINTS	SET POINT DESCRIPTION
96.17		INVERT IN
N/A		BACK UP PUMPS START
	N/A	SENSOR SPACING
N/A		BACK UP PUMPS STOP
	N/A	SENSOR SPACING
N/A		BACK UP HL ALARM
96.33		HIGH LEVEL ALARM
	0.50	SENSOR SPACING
95.83		LAG PUMP START
	0.50	SENSOR SPACING
95.33		LEAD PUMP START
	1.00	SENSOR SPACING
94.33		PUMP STOP
	2.00	DISTANCE TO FLOOR
92.33		FLOOR ELEVATION

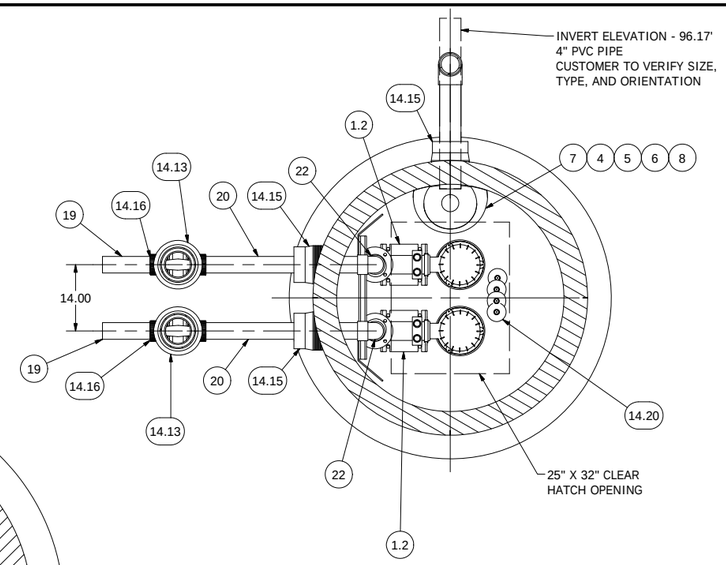

NOTE: WET WELL TOP SLAB IS PEDESTRIAN RATED

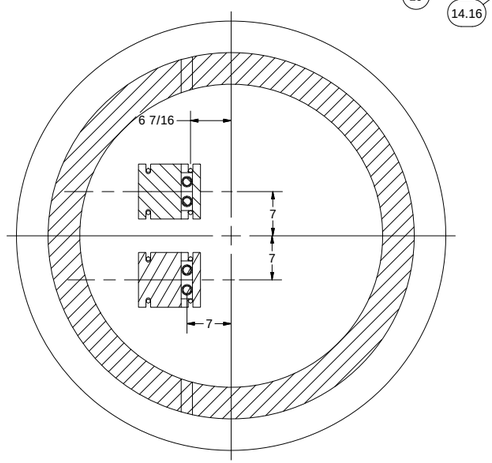

SECTION A-A
SCALE 1/12
ANCHOR BOLT LAYOUT

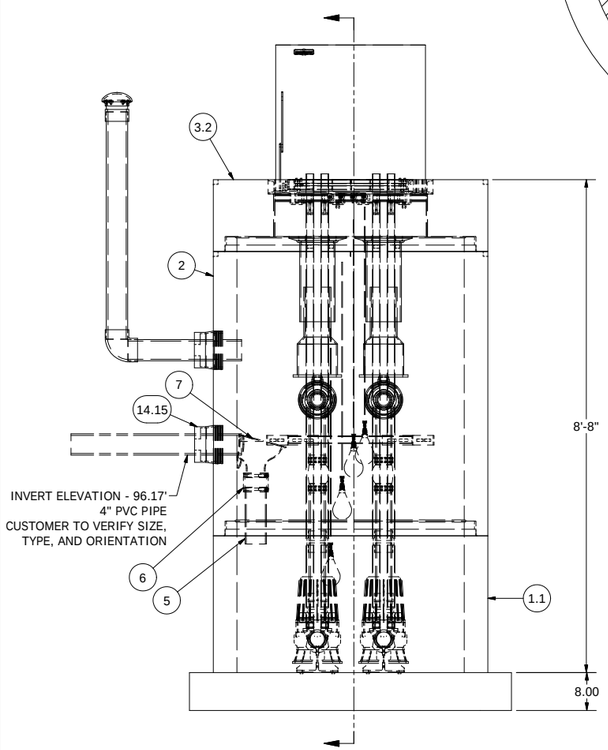

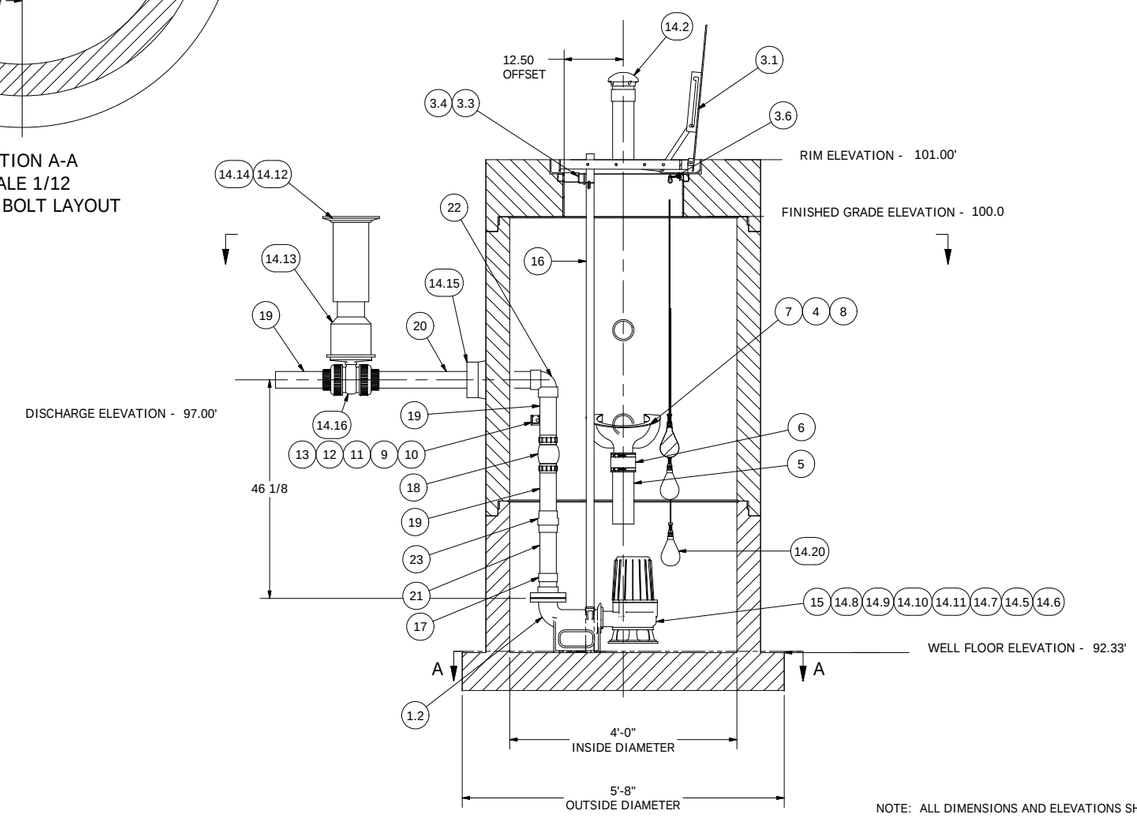

4' DIAMETER WET WELL
3" DISCHARGE PIPING
TSURUMI PUMPS

ALL MATERIALS SHOWN ON THIS SHEET WILL BE SUPPLIED BY ROMTEC UTILITIES AND DELIVERED TO THE SITE AFTER THE HOLE HAS BEEN EXCAVATED AND SHORED. THE CONTRACTOR SHALL SUPPLY A CRANE OF SUFFICIENT SIZE TO LOWER ALL THE CONCRETE PIECES INTO THE HOLE SAFELY. THE THE CONTRACTOR SHALL INSTALL THE WET WELL (AND VALVE VAULT AND METERING VAULT IF APPLICABLE). ROMTEC UTILITIES WILL PROVIDE A REPRESENTATIVE FOR TECHNICAL ASSISTANCE ON THE DAY OF INSTALLATION TO ANSWER ANY QUESTIONS THAT MAY ARISE. THE CONTRACTOR IS RESPONSIBLE FOR ALL PLUMBING AND ELECTRICAL CONNECTIONS AND INSTALLATION. ITEMS NOTED AS "BY OTHERS" WILL BE PROVIDED AND INSTALLED BY THE CONTRACTOR. ROMTEC UTILITIES WILL NOT INSTALL ANY OF THE COMPONENTS SHOWN ON THIS PAGE.

NOTE: ALL DIMENSIONS AND ELEVATIONS SHOWN ARE NOMINAL DIMENSIONS. IT IS THE RESPONSIBILITY OF THE ON-SITE CONTRACTOR OR ROMTEC UTILITIES CUSTOMER (NOT ROMTEC UTILITIES) TO VERIFY THE ACCURACY OF ANY CRITICAL DIMENSIONS OR ELEVATIONS PRIOR TO SETTING OR INSTALLING ANY EQUIPMENT.

© 2013 ROMTEC INC. ALL RIGHTS RESERVED. THESE PLANS AND DRAWINGS MAY NOT BE REPRODUCED, ADAPTED, OR FURTHER DISTRIBUTED, AND NO COMPONENTS MAY BE CONSTRUCTED FROM THESE PLANS, WITHOUT WRITTEN PERMISSION OF ROMTEC, INC.

REV	DESCRIPTION	DATE	APPROV
4	REVISED GUIDE BARS TO 1-1/4in AS BUILT	10/3/13	AD
3	REVISED INLET ORIENTATION PER COMMENTS	8/20/13	AD
2	REVISED FOR PRODUCTION LAUNCH	8/6/13	AD
1	REVISED TO 2HP PUMPS AND INLET ELEV. CHANGE	8/1/13	AD

REVISION HISTORY

VERIFY SCALE
BAR IS ONE INCH ON ORIGINAL DRAWING
0 1"
IF NOT ONE INCH ON THIS SHEET, ADJUST SCALES ACCORDINGLY

DSN - NG
DRN - NG
CKD - AD
DATE - 4/3/13

COMPONENT DRAWING

ROMTEC UTILITIES
18240 NORTH BANK ROAD
ROSEBURG, OREGON 97470
(541) 496-9678
FAX (541) 496-0804

VALLEY FINE FOODS
3" - 4' DIA WET WELL

SHEET
1 OF 1

JOB NUMBER
RMTC
0000