2.01 SITE LAYOUT

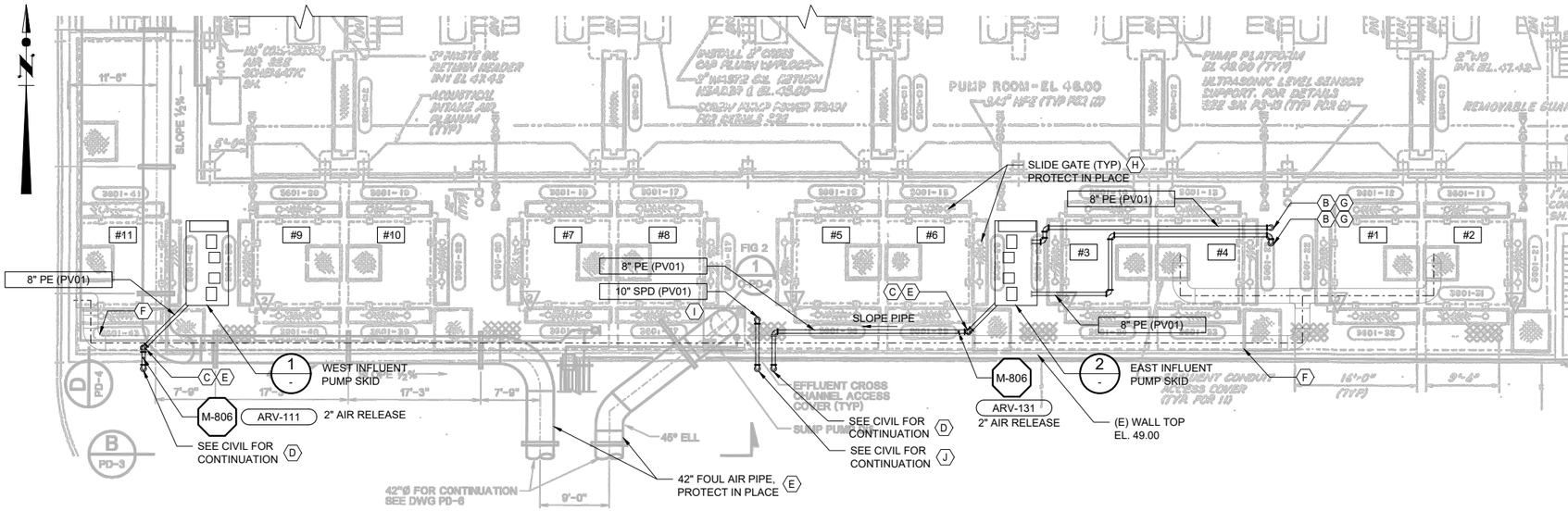

EXISTING IPS BUILDING 2ND FLOOR PLAN DETAIL
NTS

GENERAL SHEET NOTES

1. TAGGING OF SKID-MOUNTED VALVES SUPPLIED BY EQUIPMENT VENDOR IS NOT SHOWN. REFER TO P&ID FOR VALVE TAGS AND REFER TO SKID SPECIFICATIONS FOR VALVE SPECS.

SHEET KEYNOTES

A. FURNISH AND INSTALL INFLUENT PUMP SKID PER SPECIFICATION SECTION 33 32 14 - PACKAGE SELF-PRIMING PUMPING SKID.

B. CORE DRILL HOLE IN EXISTING SLAB. LOCATIONS OF HOLES SHALL BE STRICTLY COORDINATED WITH PUMP SUCTION PIPES. CORE DRILLS SHALL AVOID EXISTING BEAMS. NO CORE DRILLS SHALL BE MADE PRIOR TO APPROVED SHOP DRAWINGS OF PUMPING SKID.

C. INSTALL (2) 8" FLANGED 90° BEND (VERTICAL) TO RAISE PIPE CL EL TO ±52.18'.

D. AFTER CROSSING OVER EXISTING GUARDRAIL AT CL EL ±52.18', INSTALL 10"X8" FLANGED REDUCING 90° BEND (VERTICAL) AND INSTALL 10" PIPE TO GROUND LEVEL, EL ±33.00'. SUPPORT 10" PIPE ON EXISTING WALL.

E. AVOID EXISTING METAL PIPE INSIDE WALL NEAR FLOOR LEVEL.

F. PROTECT IN PLACE EXISTING METAL PIPE.

G. FILLET WELD SS PLATE TO PIPE (TWO SIDES). PROVIDE TYPE 316 SS ADHESIVE ANCHOR (NUMBER AND EMBEDMENT TO BE DESIGNED BY SSII AND SUBMITTED FOR ENGINEER APPROVAL). CL OF ANCHOR SHALL BE MIN 6" FROM EDGE OF CORE DRILL.

H. SSII IS RESPONSIBLE TO AVOID CONFLICTS WITH EXISTING SLIDE GATES AND OPERATION OF GATES SHALL BE MAINTAINED AT ALL TIMES.

I. CORE DRILL HOLE IN EXISTING SLAB. LOCATION OF HOLE IS SHOWN APPROXIMATE AND SHALL BE COORDINATED WITH OWNER.

J. INSTALL VERTICAL 10" PIPE FROM GROUND LEVEL, EL ±33.00', AND SUPPORT ON EXISTING WALL. CROSS OVER EXISTING GUARDRAIL WITH PIPE INV. EL 50.50'.

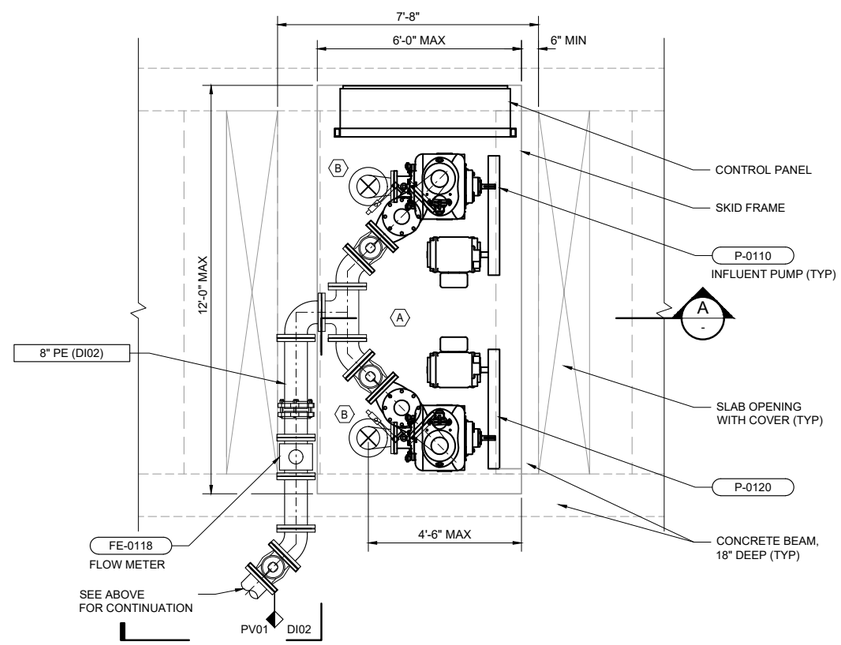

1 ENLARGED PARTIAL FLOOR PLAN
SCALE: 1/2" = 1'-0"

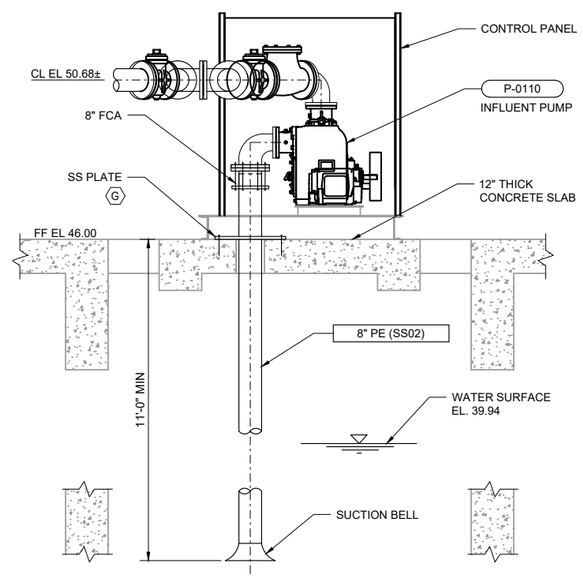

A SECTION
SCALE: 1/2" = 1'-0"

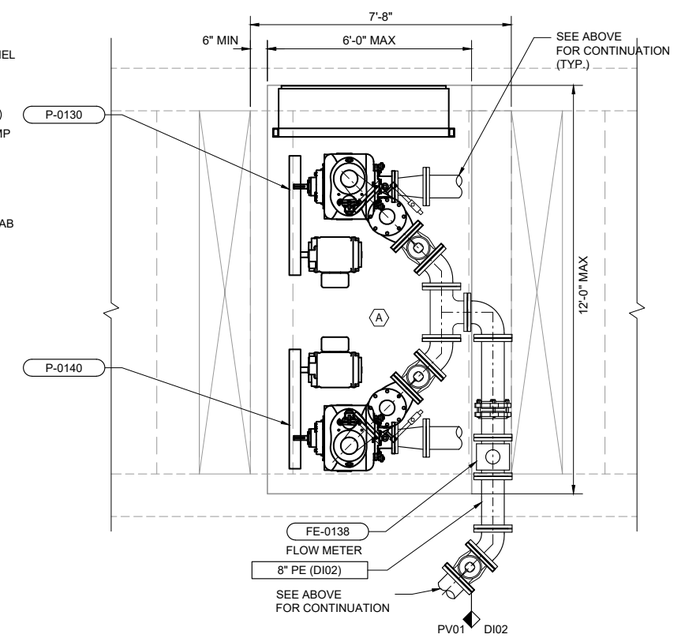

2 ENLARGED PARTIAL FLOOR PLAN
SCALE: 1/2" = 1'-0"

FINAL SOLICITATION/PROCUREMENT DESIGN
MARCH 2020

These design documents are part of a furnish/install purchase order for implementation of test facilities. The level of detail provided reflect this delivery method. The Shared System Supplier is responsible to verify field conditions prior to initiating construction and to provide construction details consistent with the design intent for review where latitude has been provided.

THE CITY OF LOS ANGELES OR ITS OFFICERS OR AGENTS SHALL NOT BE RESPONSIBLE FOR THE ACCURACY OR COMPLETENESS OF ELECTRONIC COPIES OF THIS PLAN SHEET.

REVISION DATES (DESIGN STAGE ONLY)

Sheet Version 3.0
C:\PWWORKDIR\D0534008\M-3.DWG 2/28/2020 9:34 AM

BUREAU OF ENGINEERING

NO.	REVISIONS:	DATE:	BY:

CIP NO.

INDEX NO.

THIS PLAN WAS ELECTRONICALLY SIGNED AND STAMPED.

REGISTERED PROFESSIONAL ENGINEER No. 85538 Exp. 03/31/20 CIVIL STATE OF CALIFORNIA

CITY OF LOS ANGELES DEPARTMENT OF PUBLIC WORKS

DESIGN GROUP	DATE:
ENGINEER:	3/2020
DESIGNED BY:	3/2020
DRAWN BY:	3/2020
CHECKED BY:	3/2020
APPROVED BY:	

VERTICAL CONTROL:
HORIZONTAL CONTROL:

SHEET TITLE: INFLUENT PUMP STATION PLAN AND SECTION

PROJECT: HYPERION MBR PILOT FACILITY

ADDRESS: HYPERION WATER RECLAMATION PLANT
12000 VISTA DEL MAR, PLAYA DEL REY, CA 90293

WORK ORDER NO.

DRAWING NO.

M-3

SHEET OF SHEETS

2.01 SITE LAYOUT

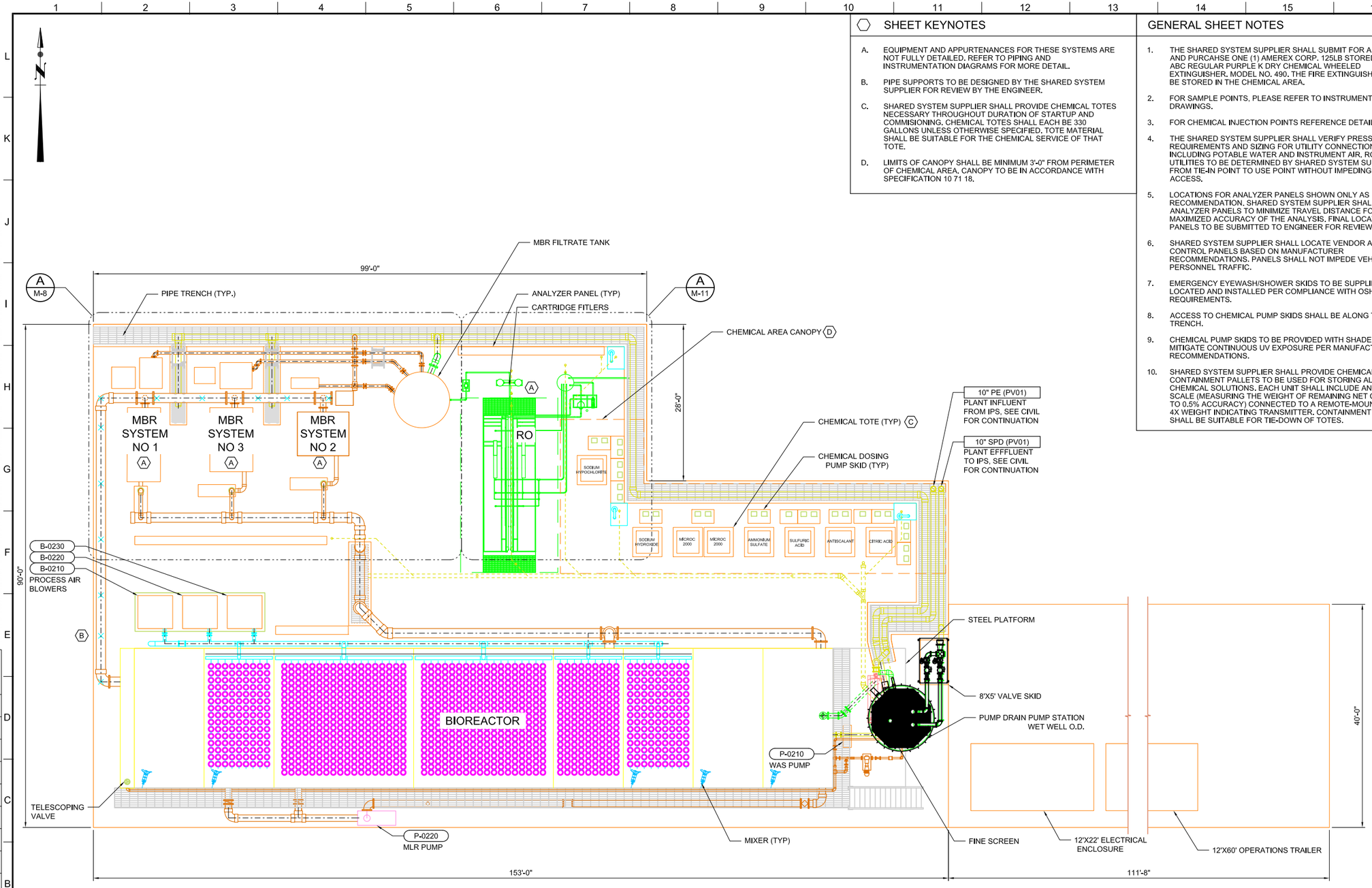

PLAN

SCALE : 1/8" = 1'-0"

SHEET KEYNOTES

A. EQUIPMENT AND APPURTENANCES FOR THESE SYSTEMS ARE NOT FULLY DETAILED. REFER TO PIPING AND INSTRUMENTATION DIAGRAMS FOR MORE DETAIL.

B. PIPE SUPPORTS TO BE DESIGNED BY THE SHARED SYSTEM SUPPLIER FOR REVIEW BY THE ENGINEER.

C. SHARED SYSTEM SUPPLIER SHALL PROVIDE CHEMICAL TOTES NECESSARY THROUGHOUT DURATION OF STARTUP AND COMMISIONING. CHEMICAL TOTES SHALL EACH BE 330 GALLONS UNLESS OTHERWISE SPECIFIED. TOTE MATERIAL SHALL BE SUITABLE FOR THE CHEMICAL SERVICE OF THAT TOTE.

D. LIMITS OF CANOPY SHALL BE MINIMUM 3'-0" FROM PERIMETER OF CHEMICAL AREA. CANOPY TO BE IN ACCORDANCE WITH SPECIFICATION 10 71 18.

GENERAL SHEET NOTES

1. THE SHARED SYSTEM SUPPLIER SHALL SUBMIT FOR APPROVAL AND PURCAHSE ONE (1) AMEREX CORP. 125LB STORED PRESSURE ABC REGULAR PURPLE K DRY CHEMICAL WHEELED EXTINGUISHER, MODEL NO. 490. THE FIRE EXTINGUISHER SHOULD BE STORED IN THE CHEMICAL AREA.
2. FOR SAMPLE POINTS, PLEASE REFER TO INSTRUMENTATION DRAWINGS.
3. FOR CHEMICAL INJECTION POINTS REFERENCE DETAIL M-707.
4. THE SHARED SYSTEM SUPPLIER SHALL VERIFY PRESSURE REQUIREMENTS AND SIZING FOR UTILITY CONNECTIONS INCLUDING POTABLE WATER AND INSTRUMENT AIR. ROUTING OF UTILITIES TO BE DETERMINED BY SHARED SYSTEM SUPPLIER FROM TIE-IN POINT TO USE POINT WITHOUT IMPEDING SITE ACCESS.
5. LOCATIONS FOR ANALYZER PANELS SHOWN ONLY AS RECOMMENDATION. SHARED SYSTEM SUPPLIER SHALL LOCATE ANALYZER PANELS TO MINIMIZE TRAVEL DISTANCE FOR MAXIMIZED ACCURACY OF THE ANALYSIS. FINAL LOCATION OF PANELS TO BE SUBMITTED TO ENGINEER FOR REVIEW.
6. SHARED SYSTEM SUPPLIER SHALL LOCATE VENDOR AND LOCAL CONTROL PANELS BASED ON MANUFACTURER RECOMMENDATIONS. PANELS SHALL NOT IMPEDE VEHICULAR OR PERSONNEL TRAFFIC.
7. EMERGENCY EYEWASH/SHOWER SKIDS TO BE SUPPLIED, LOCATED AND INSTALLED PER COMPLIANCE WITH OSHA REQUIREMENTS.
8. ACCESS TO CHEMICAL PUMP SKIDS SHALL BE ALONG THE PIPE TRENCH.
9. CHEMICAL PUMP SKIDS TO BE PROVIDED WITH SHADES TO MITIGATE CONTINUOUS UV EXPOSURE PER MANUFACTURER'S RECOMMENDATIONS.
10. SHARED SYSTEM SUPPLIER SHALL PROVIDE CHEMICAL CONTAINMENT PALLETS TO BE USED FOR STORING ALL BULK CHEMICAL SOLUTIONS. EACH UNIT SHALL INCLUDE AN INTEGRAL SCALE (MEASURING THE WEIGHT OF REMAINING NET CHEMICAL TO 0.5% ACCURACY) CONNECTED TO A REMOTE-MOUNTED NEMA 4X WEIGHT INDICATING TRANSMITTER. CONTAINMENT PALLETS SHALL BE SUITABLE FOR TIE-DOWN OF TOTES.

FINAL SOLICITATION/PROCUREMENT DESIGN
MARCH 2020

These design documents are part of a furnish/install purchase order for implementation of test facilities. The level of detail provided reflect this delivery method. The Shared System Supplier is responsible to verify field conditions prior to initiating construction and to provide construction details consistent with the design intent for review where latitude has been provided.

BUREAU OF ENGINEERING
environment LA SANITATION CITY OF LOS ANGELES

NO.	REVISIONS:	DATE:	BY:

CIP NO.

INDEX NO.

THIS PLAN WAS ELECTRONICALLY SIGNED AND STAMPED

CITY OF LOS ANGELES DEPARTMENT OF PUBLIC WORKS

CITY ENGINEER	DATE:
ENGINEER:	
DESIGNED BY:	3/2020
DRAWN BY:	3/2020
CHECKED BY:	3/2020
APPROVED BY:	3/2020

VERTICAL CONTROL:
HORIZONTAL CONTROL:

SHEET TITLE: OVERALL MECHANICAL PLAN

PROJECT: HYPERION MBR PILOT FACILITY

ADDRESS: HYPERION WATER RECLAMATION PLANT
12000 VISTA DEL MAR, PLAYA DEL REY, CA 90293

WORK ORDER NO.

DRAWING NO. M-1

SHEET OF SHEETS

REVISION DATES (DESIGN STAGE ONLY)

THE CITY OF LOS ANGELES OR ITS OFFICERS OR AGENTS SHALL NOT BE RESPONSIBLE FOR THE ACCURACY OR COMPLETENESS OF ELECTRONIC COPIES OF THIS PLAN SHEET.

Sheet Version 3.0

O:\SALES RU\JOBS\CA\HYPERION PILOT MBR\1 - PLANT DRAIN PUMP STATION\COMMENTS\2020\9-2-20 CAD FILES\CAD_DESIGN DRAWINGS\CAD_DESIGN DRAWINGS\M-1.DWG 2/23/2021 1:13 PM